CITY OF POULSBO

KITSAP COUNTY, WASHINGTON

WATER SYSTEM PLAN

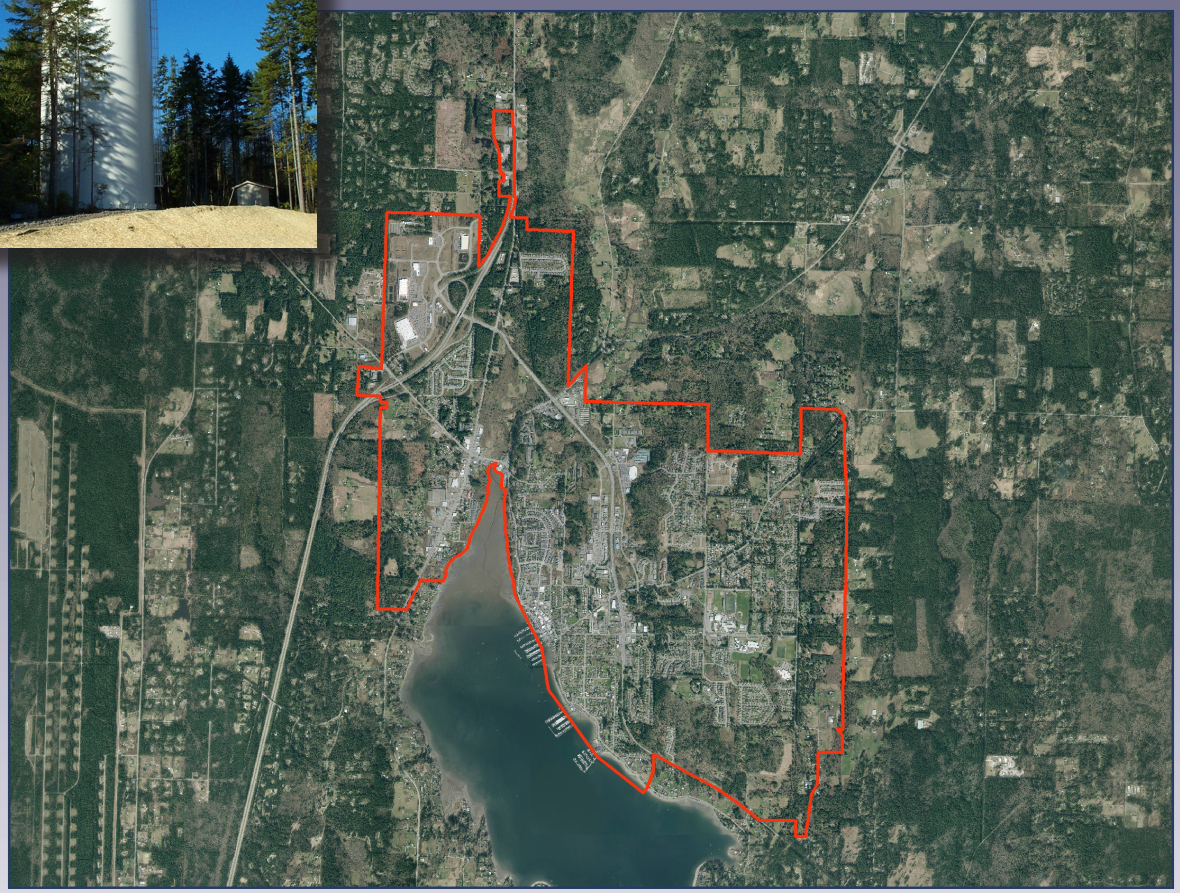

G&O #13548
SEPTEMBER 2014

Gray & Osborne, Inc.
CONSULTING ENGINEERS

STATE OF WASHINGTON
DEPARTMENT OF HEALTH
SOUTHWEST DRINKING WATER REGIONAL OPERATIONS
PO Box 47823, Olympia, Washington 98504-7823
TDD Relay 1-800-833-6388

RECEIVED
OCT 03 2014
CITY OF POULSBO
PUBLIC WORKS

September 29, 2014

Keith Svarthumle
City of Poulsbo
200 Northeast Moe Street
Poulsbo, Washington 98370

Subject: City of Poulsbo, ID #691506, Kitsap County; Water System Plan, ODW Project #14-0808

Dear Mr. Svarthumle:

The Water System Plan (WSP) received by the Office of Drinking Water (ODW) on August 25, 2014, along with subsequent submittals received on September 19, 2014, and September 29, 2014, were reviewed and are **APPROVED**.

Approval of this WSP is valid as it relates to current standards outlined in WAC 246-290 revised April 30, 2012, WAC 246-293 revised September 1997, and RCW 70.116 (Municipal Water Law) effective September 2003, and is subject to the qualifications herein. Future changes in the rules and statutes may be more stringent and require facility modification or corrective action.

An approved update of this WSP is required on or before September 29, 2020, unless ODW requests an update or plan amendment pursuant to WAC 246-290-100(9).

APPROVED NUMBER OF CONNECTIONS

Based on the information in the WSP, the City of Poulsbo demonstrated adequate capacity to meet the growth projections for the identified six-year planning period. The City of Poulsbo's water system is approved for an UNSPECIFIED number of connections, which will be reflected on your water facilities inventory form and operating permit.

The identified capacity limit is 24-hour source pumping capacity at 8,342 equivalent residential units (ERUs). This was determined based on an Average Day Demand of 176 gallons per day per ERU, a maximum-to-average day peaking factor of 2.3, and total source pumping capacity of 3,376,800. The City of Poulsbo estimates 8,178 ERUs will be served in 2034.

You are responsible for permitting the addition of new service connections to your water system in a manner consistent with the approved document. We expect you to maintain a process, which recognizes all new connections added to the water system, and the water demands associated with each connection. Your process must assure that physical capacity and water right limitations are not exceeded.

LOCAL GOVERNMENT CONSISTENCY

Darren Gurnee, Planner 2, Kitsap County signed the local consistency statement on September 22, 2014. Karla Boughton, Associate Planner, City of Poulsbo signed the local consistency statement on September 15, 2014. This meets local government consistency requirements for WSP approval pursuant to RCW 90.03.386 and RCW 43.20.

SERVICE AREA AND DUTY TO SERVE

Pursuant to RCW 90.03.386(2), the service area identified in this WSP service area map may now represent an expanded "place of use" for this system's water rights. Changes in service area should be made through a WSP amendment.

City of Poulsbo has a duty to provide new water service within its retail service area. This WSP includes service policies to describe how your system plans to provide new service within your retail service area.

CONSTRUCTION WAIVERS

Standard Construction Specifications for distribution main extensions in this WSP are approved. Consistent with WAC 246-290-125(2), this system may proceed with the installation of distribution main extensions provided this system completes and keeps on file a construction completion report form in accordance with WAC 246-290-125(2) and WAC 246-290-120(5) and makes it available for review upon request by ODW.

WATER RESOURCES

Our approval of your water system plan does not confer or guarantee any right to a specific quantity of water. The approved number of service connections is based on your representation of available water quantity. If the Washington Department of Ecology (Ecology), a local planning agency, or other authority responsible for determining water rights and water system adequacy determines that you have use of less water than you represented, the number of approved connections may be reduced commensurate with the actual amount of water and your legal right to use it.

WATERSHED PLANNING

WRIA 15 does not have an approved watershed plan at this time. ODW encourages this system to be aware of any watershed activities. Please contact Ecology for more information.

We recognize the significant effort and resource commitment involved in the preparation of this WSP. Thank you for your cooperation.

If you have any questions, please contact Corina Hayes at (360) 236-3114 or Scott Torpie (360) 236-3131.

Sincerely,

Corina Hayes
Office of Drinking Water, Regional Planner

Scott Torpie, P.E.
Office of Drinking Water, Engineering Advisor

cc: Kitsap County Planning Department
Kitsap Public Health District
Jerry Liszak, Department of Ecology

CITY OF POULSBO

KITSAP COUNTY **WASHINGTON**

WATER SYSTEM PLAN

G&O #13548
SEPTEMBER 2014

Gray & Osborne, Inc.
CONSULTING ENGINEERS

TABLE OF CONTENTS

EXECUTIVE SUMMARY

CHAPTER 1 – WATER SYSTEM DESCRIPTION

INTRODUCTION 1-1
GOALS…… 1-1
SYSTEM OWNERSHIP AND MANAGEMENT 1-1
WATER SYSTEM HISTORY 1-2
EXISTING SYSTEM 1-2
Service Area 1-3
Water Rights 1-3
Source and Treatment Facilities 1-4
Big Valley Wells No. 1 and No. 2 1-5
Pugh Well 1-5
Lincoln Wells No. 1 and No. 2 1-6
West Side Well 1-6
Bus Barn Well 1-7
Treatment 1-7
Storage….. 1-8
Finn Hill Reservoir 1-8
4th Avenue Reservoirs 1-8
Wilderness Park Reservoir 1-8
Raab Park Reservoir 1-8
Caldart Reservoirs 1-8
Pugh Road Reservoir 1-9
Lincoln Hill Standpipe (Inactive) 1-9
Olhava Standpipe 1-9
Booster Stations 1-10
Viking Avenue Booster Station 1-10
Wilderness Park Booster Station 1-10
Poulsbo Place Booster Station 1-10
Pressure Zones 1-11
Low Zone (244 Zone) 1-11
340 Zone 1-11
Middle zone (396 Zone) 1-11
East High Zone (514 Zone) 1-12
West High Zone (492 Zone) 1-12
Stendahl (350 Zone) 1-12
Pressure Reducing Valves 1-12
Distribution System 1-13
Telemetry and Control 1-14
Adjacent Purveyors 1-14
Vinland…. 1-14

Gala Pines. 1-14
Skookum Ranch 1-14
Poulsbo Heights 1-14
Viewside… 1-15
Related Planning Documents 1-15
Service Area Characteristics 1-15
Zoning and Future Land Use 1-15
Service Area Policies and Conditions of Service 1-17
Application for New Services 1-17
Wholesale Water 1-17
Water Wheeling 1-18
Design and Construction Standards 1-18
Direct Connection and Remote System Policy 1-18
Outside City Limits Surcharges 1-18
Latecomer Agreements 1-18
Facility Oversizing 1-18
System Extensions 1-18
Cross-Connection Control Program 1-19
Interties…. 1-19

CHAPTER 2 – BASIC PLANNING DATA

INTRODUCTION 2-1
HISTORICAL WATER SYSTEM DEMANDS 2-1
Population. 2-1
Water Service Connections by Customer Class 2-2
Water Use 2-3
Water Production 2-3
Water Consumption 2-4
High Usage Customers 2-6
Seasonal Variation 2-6
Distribution System Leakage 2-7
Equivalent Residential Units 2-8
PROJECTED WATER DEMANDS 2-10
Projected Population 2-10
Projected ERUs 2-12
Projected Water Use 2-12
Projected Peak Hour Water Demand 2-12
Projected ERUs per Zone 2-14
Projected Maximum Day Demand 2-15

CHAPTER 3 – SYSTEM ANALYSIS

INTRODUCTION 3-1
SYSTEM DESIGN AND CONSTRUCTION STANDARDS 3-1
Design and Construction Standards 3-1
General Facility Standards 3-1

Average Maximum Day Demands 3-1
Peak Hour Demand 3-2
Minimum System Pressure 3-2
Minimum Pipe Size 3-2
Fire Flow Standard 3-2
Valve and Hydrant Spacing 3-2
Source Capacity and Reliability 3-2
Storage Volumes 3-3
System Reliability 3-3
Water Quality Standards 3-3
SYSTEM FACILITY ANALYSIS 3-3
Water Rights Analysis 3-3
Source of Supply Analysis 3-6
Maximum Day Demand 3-6
Source Production Capacity Analysis 3-7
Average Day Demand 3-8
MDD and 72 Hour Fire Suppression Volume 3-9
Storage Analysis 3-10
Dead Storage 3-11
Operational Storage 3-11
Equalizing Storage 3-11
Standby Storage 3-12
Fire Suppression Storage 3-12
Existing Storage Analysis 3-13
Consolidating Standby and Fire Suppression Storage (Nesting) 3-14
Projected Storage Analysis 3-15
Booster Station Analysis 3-17
Wilderness Park Booster Station 3-17
Poulsbo Place Booster Station 3-17
WATER SYSTEM DEFICIENCIES 3-17
Water Rights 3-17
Source of Supply 3-17
Storage 3-17
Distribution System 3-18
SYSTEM CAPACITY SUMMARY 3-18

CHAPTER 4 – HYDRAULIC MODELING

INTRODUCTION 4-1
HYDRAULIC MODELING SOFTWARE 4-1
MODEL LAYOUT AND CONSTRUCTION 4-2
Source 4-2
Storage 4-2
Pressure Reducing Valves 4-2
System Demands 4-2

MODEL CALIBRATION 4-2
MODELED SCENARIOS AND RESULTS 4-4
Peak Hour Analysis 4-4
Available Fire Flow Analysis 4-6

CHAPTER 5 – WATER QUALITY

INTRODUCTION 5-1
BACKGROUND 5-1
WATER QUALITY STANDARDS 5-2
EXISTING DRINKING WATER QUALITY STANDARDS 5-3
Bacteriological 5-3
Description 5-3
Monitoring Requirements and Analysis 5-4
Residual Disinfectant 5-4
Monitoring Requirements and Analysis 5-4
Consumer Confidence Report 5-4
Description and Requirements 5-4
Inorganic Physical and Chemical Characteristics 5-4
Description 5-4
Monitoring Requirements and Analysis 5-6
Arsenic….. 5-7
Description 5-7
Monitoring Requirements and Analysis 5-7
Volatile Organic Compounds and Synthetic Organic Compounds 5-8
Description 5-8
Monitoring Requirements and Analysis 5-8
Asbestos… 5-9
Description 5-9
Monitoring Requirements and Analysis 5-10
Lead and Copper 5-10
Description 5-10
Monitoring Requirements and Analysis 5-10
Radionuclides and Radon 5-11
Description 5-11
Monitoring Requirements and Analysis 5-12
Disinfectants and Disinfection Byproducts Rule 5-12
Description 5-12
Monitoring Requirements and Analysis 5-12
Groundwater Rule 5-13
WATER QUALITY MONITORING SCHEDULE 5-14

CHAPTER 6 – WATER USE EFFICIENCY PROGRAM

OBJECTIVE 6-1
WATER USE EFFICIENCY PLANNING REQUIREMENTS 6-1
PAST CONSERVATION PROGRAMS 6-2
Effects of Past Program 6-2
PLANNING REQUIREMENTS 6-3
Data Collection and Reporting 6-3
Demand Forecast 6-3
WUE Measures 6-4
DISTRIBUTION SYSTEM LEAKAGE 6-4
Source and Service Metering 6-5
GOAL SETTING AND PERFORMANCE REPORTING 6-5
WATER USE EFFICIENCY PROGRAM DEVELOPMENT AND LEVEL OF IMPLEMENTATION 6-5
Water Use Efficiency Goals 6-6
Evaluation and Selection of Water Use Efficiency Measures 6-7
Mandatory Measures 6-7
Supplemental 6-9
Target Water Savings Projections 6-10
SOURCE OF SUPPLY ANALYSIS 6-10
Optimizing Use of Current Supplies 6-10
Enhanced Conservation Measures 6-10
Water Right Changes 6-11
Interties 6-11
Artificial Recharge 6-11

CHAPTER 7 – OPERATION AND MAINTENANCE PROGRAM

OBJECTIVE 7-1
WATER SYSTEM ORGANIZATION 7-1
Organizational Chart 7-1
Roles and Responsibilities 7-1
Assistant Public Works Director 7-1
Engineering Staff 7-1
Operations and Maintenance Staff 7-2
Utility Billing Staff 7-2
Operator Certification 7-2
Professional Growth Requirements 7-3
SYSTEM OPERATION AND CONTROL 7-3
Description and Location of Facilities 7-3
Normal Operation 7-4
Alternate Operation 7-4
System Monitoring and Control 7-5
COMPREHENSIVE MONITORING AND RECORD KEEPING 7-5
Water Quality Monitoring 7-5
Water Use Data Collection 7-6

PREVENTATIVE MAINTENANCE PROGRAM 7-6
EMERGENCY RESPONSE PROGRAM 7-6
Emergency Call-Up List 7-6
Notification Procedures 7-6
Bacteriological Presence Detection Procedure 7-6
VOC, SOC, IOC, and Physical Characteristics Detection Procedures 7-7
Power Failure 7-8
Severe Earthquake 7-8
Freezing Weather 7-9
Vulnerability Analysis 7-9
Contingency Operational Plan 7-10
Loss of Source 7-10
Loss of Storage 7-10
CROSS-CONNECTION CONTROL PROGRAM 7-11
SAFETY PROCEDURES 7-11
CUSTOMER COMPLAINT RESPONSE 7-11

CHAPTER 8 – DISTRIBUTION FACILITIES DESIGN AND CONSTRUCTION STANDARDS

OBJECTIVE 8-1
PROJECT REVIEW PROCEDURES 8-1
SYSTEM STANDARDS, POLICIES AND PROCEDURES 8-2
CONSTRUCTION CERTIFICATION AND FOLLOW-UP PROCEDURES 8-3

CHAPTER 9 – CAPITAL IMPROVEMENT PROGRAM

INTRODUCTION 9-1
CAPITAL IMPROVEMENT PLAN 9-2
Water Supply Projects 9-2
WS-1: Pugh Well and Lincoln Wells No. 1 and No. 2 Manganese Treatment (2014-2015) 9-2
WS-2: Westside Well Treatment (2017-2018) 9-2
WS-3: Long-Term Water Supply Study (2017) 9-2
WS-4: Big Valley Well No. 3 (2022) 9-2
WS-5: Westside Well No. 2 (2023) 9-3
WS-6: Acquire/Upgrade Supply Capacity (Beyond 2024) 9-3
Storage Projects 9-3
ST-1: Wilderness Park Reservoir Repairs (2016-2017) 9-3
ST-2: Raab Park Reservoir Replacement (2017-2018) 9-3
ST-3: Reservoir Coating Program (2018-2020) 9-4
Booster Station Projects 9-4
BS-1: Wilderness Park Booster Station Replacement (2018) 9-4
BS-2: 340 Zone Fire Flow Pump (2021) 9-4
Distribution System Projects 9-4
D-1: Old Town Water Main Replacement (2015-2019) 9-4
D-2: Viking Avenue PRV (2015) 9-5

D-3: Hostmark Transmission Main (2016) 9-5
D-4: Hostmark Distribution Main (2016) 9-5
D-5: SR 305 Crossing (2018) 9-5
D-6: Liberty Ridge Fire Flow (2019) 9-6
D-7: Water Main Replacement Program (2020-2024) 9-6
Miscellaneous Projects 9-6
M-1: Meter Upgrade and Replacement Program (2015-2016) 9-6
M-2: Telemetry System Upgrades (2015) 9-6
M-3: Public Works Complex (2017) 9-7
M-4: Water System Plan Extension (2020) 9-7
M-5: Water System Plan Update (2024) 9-7
SUMMARY OF CAPITAL IMPROVEMENTS 9-7

CHAPTER 10 – FINANCIAL ANALYSIS

INTRODUCTION 10-1
FINANCIAL STATUS OF EXISTING WATER UTILITY 10-1
Current Water Rates 10-1
System Participation Fees 10-2
Historical Financial Operations 10-3
PROJECTED REVENUES AND EXPENSES 10-4
Projected Capital Expenditures 10-8
Summary 10-10

LIST OF TABLES

No.	Table	Page
1-1	Existing Water Rights Summary	1-4
1-2	Sources of Supply	1-7
1-3	Storage Facilities	1-10
1-4	Booster Station Facilities	1-11
1-5	Pressure Relief Valves	1-13
1-6	Pipe Lengths by Diameter	1-13
1-7	Zoning Designations	1-17
2-1	Historical Population 2007 to 2013	2-2
2-2	Water Service Connections	2-2
2-3	Production by Source	2-3
2-4	Average and Maximum Day Production	2-4
2-5	Per Capita Water Usage	2-4
2-6	Consumption by Customer Class	2-5
2-7	Unbilled Metered Consumption	2-5
2-8	High-Usage Customers	2-6
2-9	Seasonal Variation by Customer Class 2013	2-7
2-10	Distribution system Leakage	2-8
2-11	Equivalent Residential Units	2-9
2-12	ERUs per Customer Class	2-10
2-13	Projected Population 2014 to 2035	2-11
2-14	Projected Production Requirements	2-13
2-15	Projected ERUs per Zone	2-15
2-16	Projected MDD per Zone	2-16
3-1	Historical Annual Withdrawal Water Rights Analysis	3-4
3-2	Projected Annual Withdrawal Water Rights Analysis	3-4
3-3	Instantaneous Withdrawal Water Rights Analysis	3-5
3-4	MDD Source Capacity of Active Wells	3-7
3-5	Source Capacity Analysis	3-8
3-6	ADD Source Capacity	3-9
3-7	MDD and Fire Suppression Analysis	3-9
3-8	Maximum Fire Flow Requirements	3-13
3-9	Existing Storage Analysis	3-14
3-10	Future Storage Analysis without System Modifications	3-16
3-11	Source and Storage Capacity Summary	3-18
4-1	Testing Locations	4-3
4-2	Conditions During Hydrant Testing	4-3
4-3	Model Calibration Results	4-4
4-4	System Conditions During Peak Hour Analyses	4-5
4-5	Minimum Pressures During Peak Hour Analyses	4-6
4-6	System Conditions During Fire Flow Analyses	4-6

No.	Table	Page

4-7 Existing Fire Flow Results by Zoning Classification and Pressure Zone, Limited by 20 psi 4-7
4-8 2014 Deficiencies 4-8
5-1 Drinking Water Regulations 5-2
5-2 Primary Water Quality Standards Inorganic Chemical Characteristics 5-5
5-3 Secondary Water Quality Standards Inorganic Chemical and Physical Characteristics 5-6
5-4 Inorganic Source Water Quality 5-7
5-5 Regulated Synthetic Organic Chemicals 5-9
5-6 Lead and Copper Testing Results 5-11
5-7 Radionuclide MCLs 5-12
5-8 City of Poulsbo Water Quality Monitoring Requirements 5-15
6-1 WUE Savings 6-2
6-2 Summary of Water Use Data Collection 6-3
6-3 Distribution System Leakage 6-5
6-4 Projected DSL Reduction 6-6
6-5 Projected ERU Reduction 6-6
6-6 Water System Commodity Charges 6-8
6-7 Water System Commodity Charges 6-9
6-8 Projected Water Use Efficiency Savings 6-10
7-1 Operator Certification 7-3
7-2 Source Operational Settings 7-4
7-3 SCADA System Monitoring and Control 7-5
7-4 Water Bacteriological Contamination Response 7-7
7-5 Earthquake Emergency Response Actions 7-8
7-6 Freezing Weather and Severe Snowstorm Emergency Response Actions 7-9
9-1 Capital Improvement Plan 9-8
10-1 2014 Water Base Rates 10-2
10-2 2014 Commodity Charges 10-2
10-3 System Participation Fees 10-3
10-4 Historical Operating Revenue and Expenditures 10-4
10-5 Forecast Factors 10-4
10-6 Projected Operating Revenues 10-6
10-7 Projected Operating Expenditures 10-7
10-8 Summary Projected Operating Cash Flow 10-8
10-9 Projected Capital Expenditures 10-9
10-10 Projected Capital Cash Flow Summary 10-10

LIST OF FIGURES

No.	Figure	On or Follows Page
1-1	Location Map	1-2
1-2	Planning Areas	1-2
1-3	Water System Facilities	1-2
1-4	Water System Schematic	1-2
1-5	Adjacent Purveyors	1-14
1-6	Topography Map	1-14
1-7	Zoning Map	1-16
4-1	2014 Peak Hour Demand Available Pressures	4-6
4-2	2014 Available Fire Flows	4-6
7-1	Organizational Chart	7-2

APPENDICES

Appendix A – Project Submittal Forms and Correspondence Letters
Appendix B – Intertie Agreements, Water Rights Self Assessment, and WFI
Appendix C – Water Right Documentation and Wellhead Protection Plan
Appendix D – Design and Construction Standards and O&M Staff Evaluation
Appendix E – Model Output Results
Appendix F – Coliform Monitoring Plan, DBP Monitoring Plan, and Notification Letters
Appendix G – Water Use Ordinances and SEPA Documentation
Appendix H – Cross-Connection Control Program
Appendix I – Capital Improvement Plan Cost Estimates

EXECUTIVE SUMMARY

The City of Poulsbo (City) Water System Plan (Plan) provides a long-term planning strategy for the City's water system over the 6-year and 20-year planning periods. The objectives of the Plan are to evaluate the performance and adequacy of the existing water system, to determine improvements necessary to meet the infrastructure demands for the next 20 years, and to identify a funding strategy for the capital improvement program. The Plan has been developed in accordance with the latest revision to Chapter 246-290 of the Washington Administrative Code (WAC), as presented in the Washington State Department of Health (DOH) regulations for Group A Public Water Systems.

The Plan consists of ten chapters, described as follows:

- Chapter 1 describes the water system management, infrastructure, service policies, and relationship of the Plan to other agencies and planning documents.

- Chapter 2 provides basic planning data including existing and future estimates of customers, water consumption, and water production.

- Chapter 3 identifies system performance standards and analyzes the source, water rights, storage, and booster station capacity.

- Chapter 4 provides the hydraulic analysis for the water system using H_2ONet modeling software. This chapter illustrates how the system responds to various modeling scenarios, including identifying available fire flows and system pressures.

- Chapter 5 presents results of past water quality analyses and describes a future monitoring schedule.

- Chapter 6 presents a water use efficiency program including goals for reducing water usage and a summary of past conservation effects.

- Chapter 7 provides a discussion of the operations and maintenance programs established by the City.

- Chapter 8 describes the City's design and construction standards.

- Chapter 9 presents the City's water system capital improvement program, which outlines the infrastructure planned to be constructed to eliminate deficiencies and accommodate future growth.

- Chapter 10 presents a review of the current financial status of the water utility and projects future operating and capital revenues and expenditures.

The City's water system provides service to approximately 9,388 people located in an area totaling 2,970 acres. These customers are served by five wells (3.4 million gallons per day), nine reservoirs (4.1 million gallons), and six pressure zones. Approximately two-thirds of total water consumption is used by residential customers.

The amount of water the City uses in gpd/ERU has dropped significantly since the last plan. In the 2007 Plan, the City used on average 195 gpd/ERU and currently uses 159 gpd/ERU. This decrease in water use has been a combination of increased efficiency, education, and lowering the distribution system leakage. Consequently, the long term projected consumption of the City is not anticipated to exceed their water rights as it did in the 2007 plan.

By 2020, total annual water use is projected to be 1,270 acre-feet/year, a 30 percent increase from current usage. By 2034, projections increase to 1,612 acre-feet/year. These projections do not include reductions in water use created by increased conservation and water use efficiency measures underway and planned by the City. At this time, the City holds water rights allowing for a total of 1,893 acre-feet/year. It is not expected that the City will need additional instantaneous or annual water rights within the 20 year projection period.

DOH recommends water systems be able to pump the maximum day demand in an 18-hour period for system reliability purposes but this is not a requirement. The system's 18-hour pumping capacity is approximately 2.6 million gallons per day. In 2020 and beyond, the pumps will need to run for more than 18 hours per day to provide water for the maximum day. Throughout the 20-year projection period, the pumps are able to supply the maximum day demand in less than 24 hours. The City is planning a long term water supply study in 2017 that will investigate the best approach for increasing the reliability of the system.

In addition to water supply planning, the water system is planning several physical improvements including a booster station, water mains, seismic tank retrofits, and other general upgrades. High service elevations near the 4th Avenue Reservoirs causes a large amount of dead storage in the Low Zone. Adding a fire flow pump and reconfiguring the 340 Zone will reduce this dead storage in the Low Zone but system wide there is not a storage deficiency. One booster stations is also planned to allow the City to transfer supply between pressure zones, increasing reliability and improving fire flow capacity. Distribution system improvements are planned as well to accommodate growth, improve the distribution system capacity, and replace aging piping.

Capital expenditures are estimated to be $8.2 million in the 6-year planning period. Connection charge revenue generated from future customers is estimated to be $4 million in the 10-year planning period. A onetime increase for rates and connection charges is

planned in 2015 since the City's number of O&M staff and connection charge fee are well below the industry average. Beyond this onetime charge, the rate revenue is also projected to increase due to additional customers and annual rate adjustments. Overall, the water utility is projected to remain healthy while maintaining low water rates.

CHAPTER 1

WATER SYSTEM DESCRIPTION

INTRODUCTION

In accordance with Washington Administrative Code (WAC) 246-290-100 and the Washington State Department of Health (DOH), water system plans need to be updated every 6 years or more frequently, if necessary, to reflect the current conditions of the water system. This Water System Plan (Plan) updates the 2007 *City of Poulsbo Water System Plan*. Copies of the Washington State DOH Project Approval Application and Submittal Forms are included in Appendix A.

GOALS

Water system planning is essential to good management of a water system. This water system plan has been prepared to meet the following objectives.

- Ensure efficient use of available water resources.
- Coordinate planning efforts for growth and development with available water resources.
- Document existing facilities and identify current and future system needs.
- Provide information that will help to ensure that safe, high quality drinking water is delivered to existing and future system customers.
- Ensure reliable service during all conditions of operation.
- Provide information for coordination of City utility services.
- Develop a capital improvement plan for future water system facilities.
- Evaluate existing and future maintenance needs.
- Provide water utility financial plan.

SYSTEM OWNERSHIP AND MANAGEMENT

The City of Poulsbo (City) is located in the northern portion of Kitsap County, Washington. The City owns and operates a municipal water system that serves customers within the City's urban growth area (UGA). Figure 1-1 identifies the location of the City within the state and Kitsap County. Figure 1-2 provides a map defining the city limits, urban growth area, and water service area. The City owns three properties outside of the urban growth area that were annexed in 1976 before laws required adjacency and to be inside of the UGA. The sites are the locations of the City's wells, will not be developed, and do not need water service. A copy of the Water Facilities Inventory (WFI) is included in Appendix B and a summary of the WFI is as follows:

System Name:	City of Poulsbo
System ID Number:	691506
System Type:	Group A - Community Public Water System
County:	Kitsap
Contact:	Mr. Keith Svarthumle, Water System Manager
Address:	200 NE Moe Street, Poulsbo, WA 98370
Contact Phone:	(360) 394-9755

The City is governed by a Mayor and a seven member City Council. The Public Works Department has two assistant directors, a City Engineer and a Public Works Superintendent.

WATER SYSTEM HISTORY

The City's water system was originally constructed to serve the City's downtown area. In the 1940s, the City developed the Big Valley Springs and a distribution system. As growth occurred, Crystal Springs and additional shallow wells were developed to increase source capacity. In the 1960s, the City constructed its first storage facilities, Wilderness Park and Raab Park Reservoirs, which remain in service today. The Raab Park Reservoir also created the City's second pressure zone. The Lincoln Well, completed in the 1960s, provided the City with a source of supply outside of Big Valley and a supply source for the second pressure zone.

As growth continued through the 1970s, a third pressure zone was added to the east with the construction of the Lincoln Standpipe. This standpipe served this zone until 1993 when the Pugh Elevated Reservoir was completed and increased the zone grade. The Pugh Well was developed through the late 1980s to meet increasing demands. A second Lincoln Well was drilled to replace the Pugh Well.

A fourth pressure zone was created in the west hills of the City in 2002 with the completion of the Olhava Standpipe. The Westside Well was drilled and developed to serve this new area.

Lincoln Well No. 2 was drilled in 2007 as a supplementary source to the Pugh Well which has been plagued with problems from high levels of iron bacteria. This well is currently pending approval from DOH.

EXISTING SYSTEM

Descriptions of the City's facilities currently owned and operated by the City are provided in the following sections. Figure 1-3 is a water system base map identifying the general location of all major system facilities, water mains, service area boundaries, and pressure zone boundaries. Figure 1-4 provides a 3-dimensional schematic of the water system that shows the major water system facilities and pressure zones.

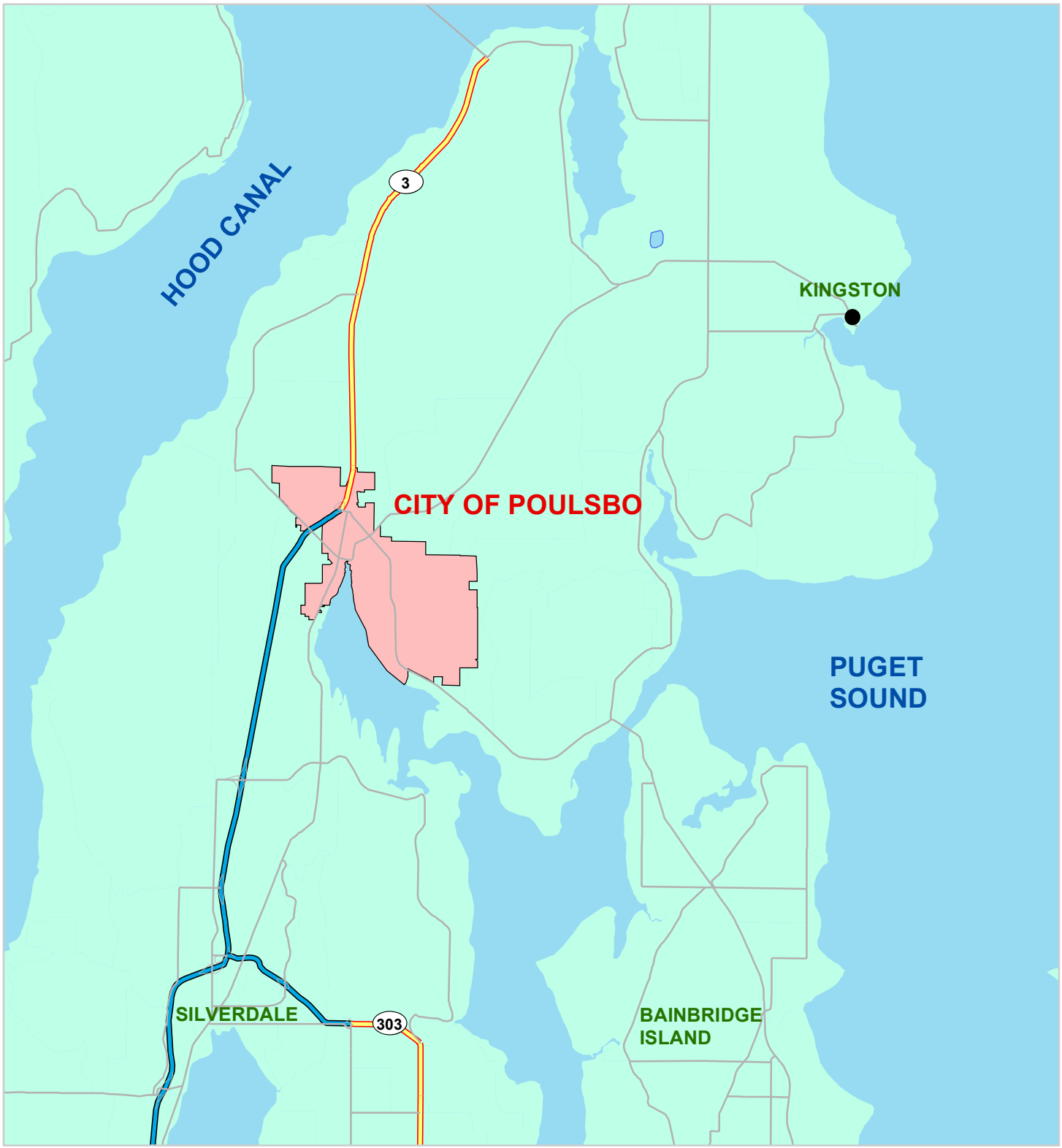

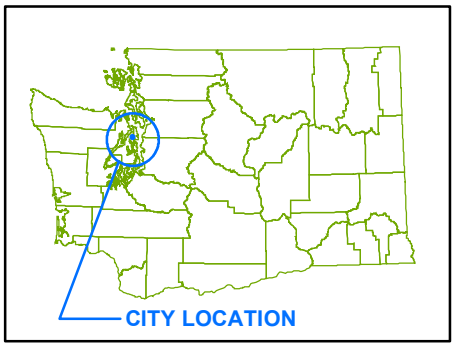

CITY OF POULSBO

WATER SYSTEM PLAN
FIGURE 1-1
LOCATION MAP

Gray & Osborne, Inc.

M:\Poulsbo\13548 Water System Plan\GIS\LOCATION.mxd

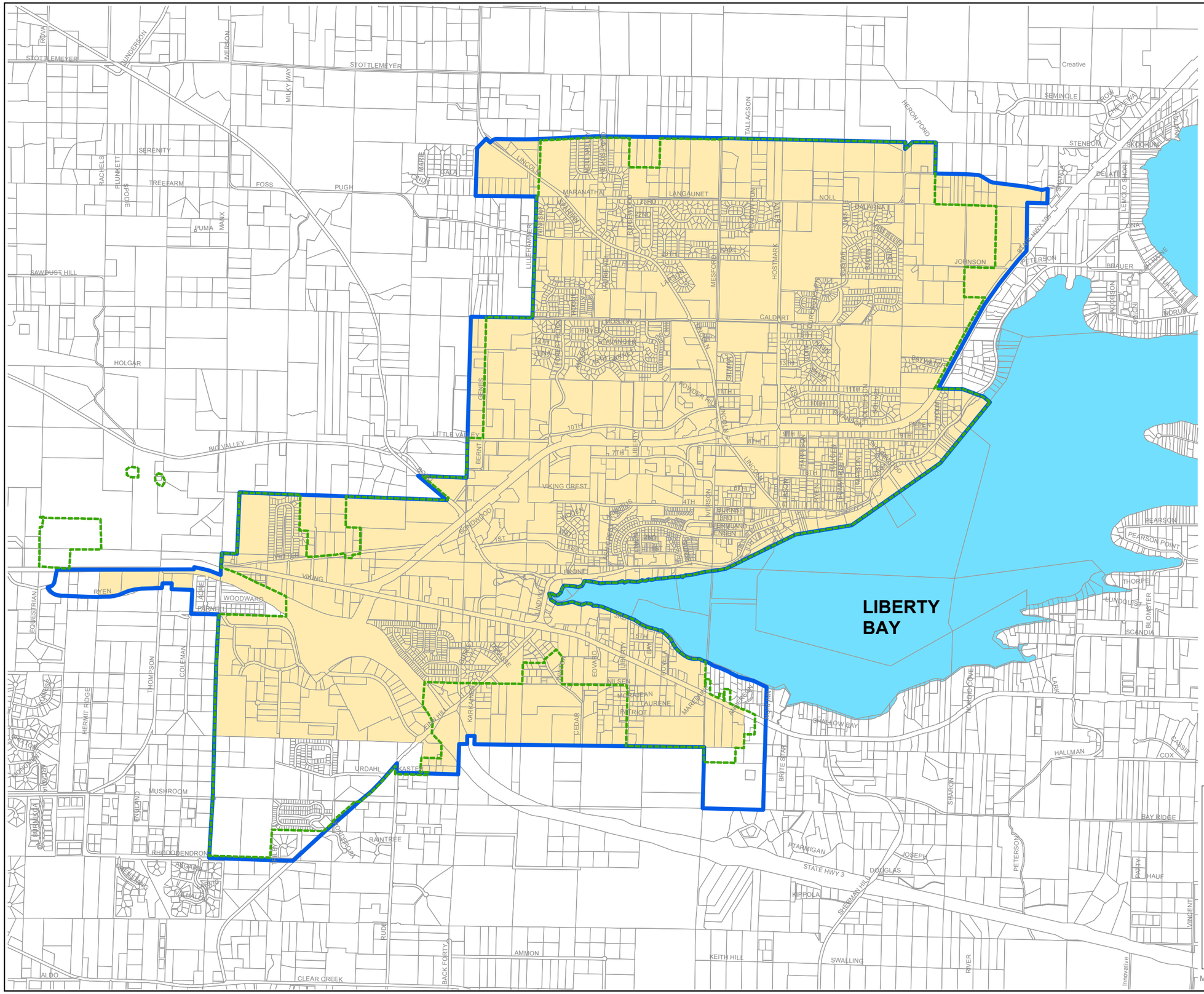

N

0 1,000 2,000 4,000 Feet

LEGEND:

- CITY LIMITS
- UGA
- PARCELS
- RETAIL SERVICE AREA
- WATER

SOURCE: KITSAP COUNTY & CITY OF POULSBO

CITY OF POULSBO

WATER SYSTEM PLAN
PLANNING AREAS
FIGURE 1-2

Gray & Osborne, Inc.
CONSULTING ENGINEERS

M:\Poulsbo\13548 Water System Plan\GIS\PLANNING.mxd

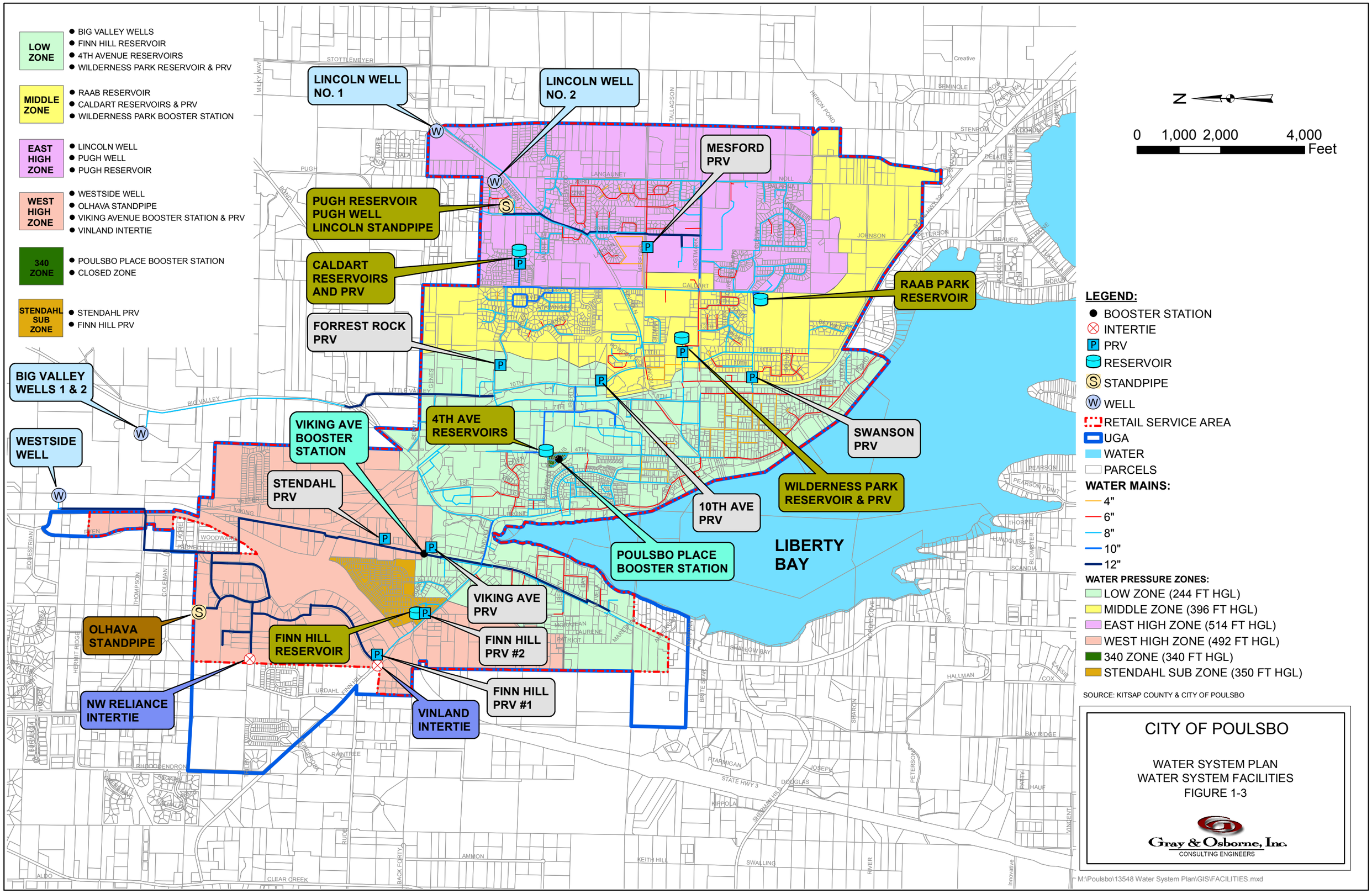
LOW ZONE
BIG VALLEY WELLS
FINN HILL RESERVOIR
4TH AVENUE RESERVOIRS
WILDERNESS PARK RESERVOIR & PRV
MIDDLE ZONE
RAAB RESERVOIR
CALDART RESERVOIRS & PRV
WILDERNESS PARK BOOSTER STATION
EAST HIGH ZONE
LINCOLN WELL
PUGH WELL
PUGH RESERVOIR
WEST HIGH ZONE
WESTSIDE WELL
OLHAVA STANDPIPE
VIKING AVENUE BOOSTER STATION & PRV
VINLAND INTERTIE
340 ZONE
POULSBO PLACE BOOSTER STATION
CLOSED ZONE
STENDAHL SUB ZONE
STENDAHL PRV
FINN HILL PRV
LINCOLN WELL NO. 1
LINCOLN WELL NO. 2
MESFORD PRV
PUGH RESERVOIR PUGH WELL LINCOLN STANDPIPE
CALDART RESERVOIRS AND PRV
RAAB PARK RESERVOIR
FORREST ROCK PRV
BIG VALLEY WELLS 1 & 2
WESTSIDE WELL
VIKING AVE BOOSTER STATION
4TH AVE RESERVOIRS
SWANSON PRV
WILDERNESS PARK RESERVOIR & PRV
STENDAHL PRV
10TH AVE PRV
POULSBO PLACE BOOSTER STATION
LIBERTY BAY
VIKING AVE PRV
OLHAVA STANDPIPE
FINN HILL RESERVOIR
FINN HILL PRV #2
NW RELIANCE INTERTIE
VINLAND INTERTIE
FINN HILL PRV #1
N
0 1,000 2,000 4,000 Feet
LEGEND:
BOOSTER STATION
INTERTIE
PRV
RESERVOIR
STANDPIPE
WELL
RETAIL SERVICE AREA
UGA
WATER
PARCELS
WATER MAINS:
4"
6"
8"
10"
12"
WATER PRESSURE ZONES:
LOW ZONE (244 FT HGL)
MIDDLE ZONE (396 FT HGL)
EAST HIGH ZONE (514 FT HGL)
WEST HIGH ZONE (492 FT HGL)
340 ZONE (340 FT HGL)
STENDAHL SUB ZONE (350 FT HGL)
SOURCE: KITSAP COUNTY & CITY OF POULSBO
CITY OF POULSBO
WATER SYSTEM PLAN
WATER SYSTEM FACILITIES
FIGURE 1-3
Gray & Osborne, Inc.
CONSULTING ENGINEERS
M:\Poulsbo\13548 Water System Plan\GIS\FACILITIES.mxd

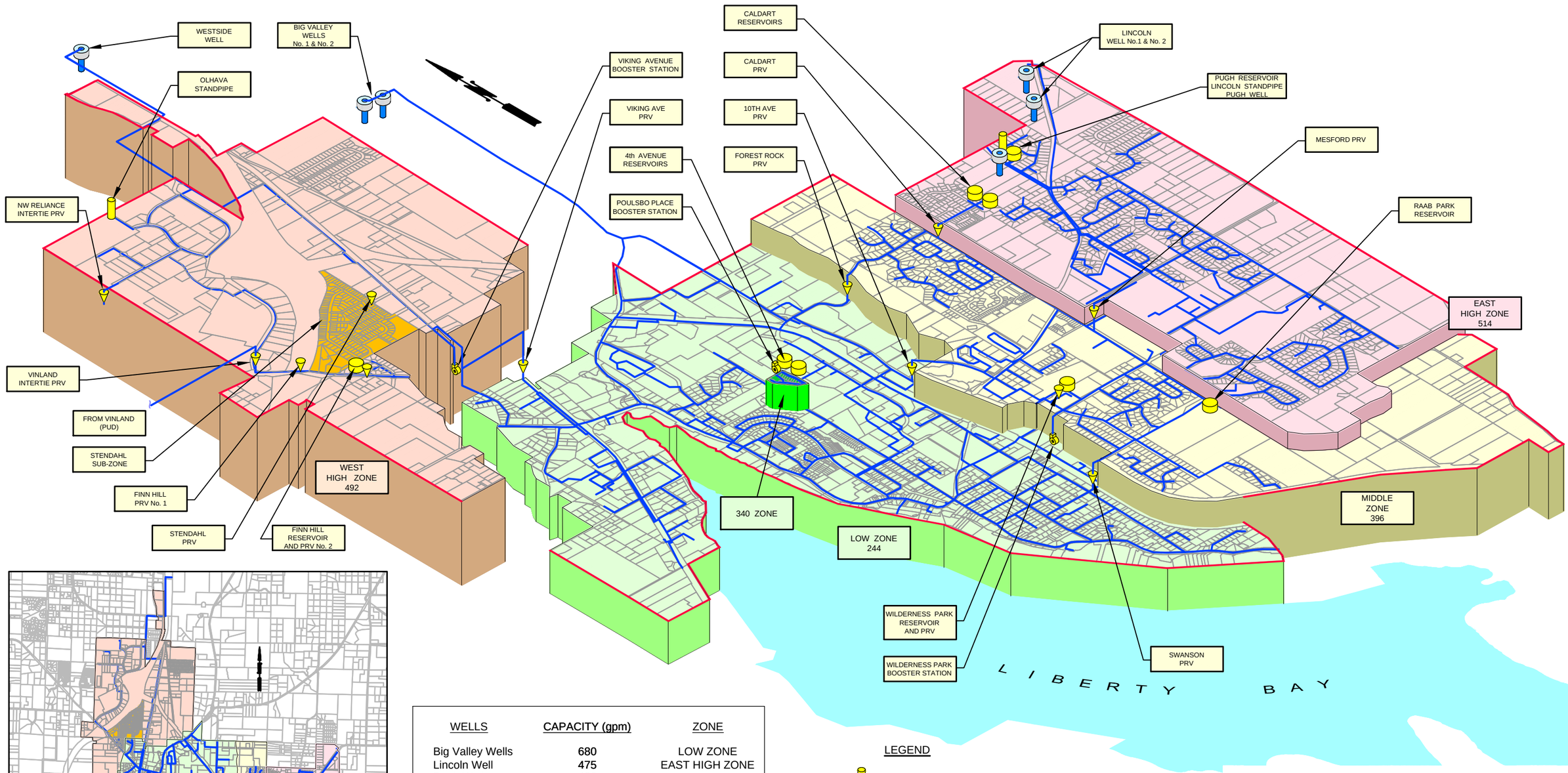

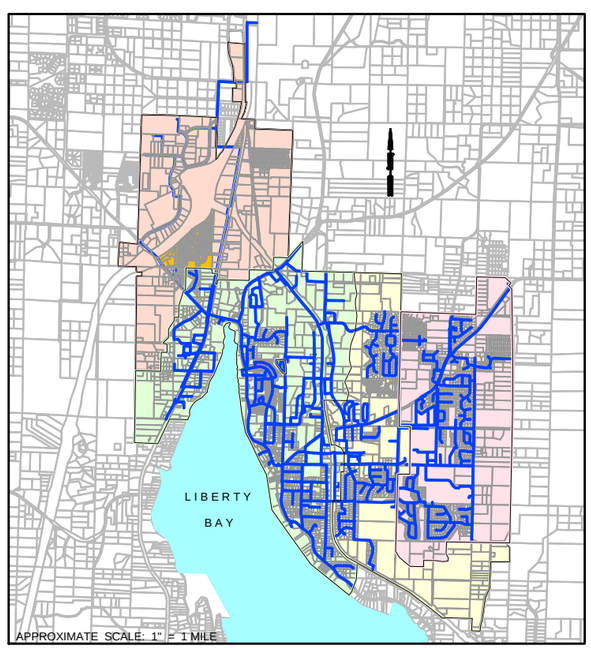

WELLS	CAPACITY (gpm)	ZONE
Big Valley Wells	680	LOW ZONE
Lincoln Well	475	EAST HIGH ZONE
Pugh Well	480	EAST HIGH ZONE
Westside Well	500	WEST HIGH ZONE

STORAGE FACILITY	CAPACITY (G)	HGL (ft)
Olhava Standpipe	993,000	492
Finn Hill Reservoirs	508,000	244.5
4th Avenue Reservoirs	(2) at 125,000	244.5
Wilderness Park Reservoir	1,036,000	244.5
Raab Park Reservoir	150,000	396
Caldart Reservoirs	(2) at 75,000	396
Pugh Reservoir	1,000,000	514
Lincoln Standpipe (off-line)	155,000	469

LEGEND

- STANDPIPE
- RESERVOIR
- WELL
- BOOSTER STATION
- PRESSURE REDUCING VALVE
- WATER MAIN
- RETAIL SERVICE AREA

CITY OF POULSBO

WATER SYSTEM PLAN
WATER SYSTEM SCHEMATIC
FIGURE 1-4

Gray & Osborne, Inc.
CONSULTING ENGINEERS

M:\Poulsbo\13548 Water System Plan\Figures\3D Pressure Zones\3D Water System Figure 2014-09-26.dwg, 9/26/2014 8:55:35 AM, pmarshall

SERVICE AREA

The City's existing service area is the same as the retail service area (RSA) and encompasses where direct service connections exist or service connections are currently available. The City's retail service area boundary is shown on Figure 1-2.

The retail service area has been adjusted since the 2007 Water System Plan to reflect changes to the City Limits and adjustments to better serve customers. The service area adjustment in the northwestern part of the UGA does not include the entire UGA due to the topography of the area. Services west of Olympic College had been in the City's planning area but are now served by the PUD. In 2011, the City agreed to relinquish these areas to the PUD and in return there is an additional intertie at NW Reliance Road that will help provide fire flow storage for the West High Zone. The retail service area relinquished is no longer included in the City's retail service area as show in Figure 1-2.

The City's future water service area boundary is the same as its current retail service area. The City's retail service area already includes all areas within the City's UGA that the City is capable of serving, so no expansion of the retail service area is expected if there are no changes to the City's UGA.

WATER RIGHTS

A water right is a legal authorization to use a certain amount of public water for a designated purpose. The purpose must be considered a "beneficial use" which includes domestic supply, irrigation, and power generation. The Department of Ecology's publication 96-1804-S&WR defines a water right claim, permit, and certificate as follows:

- A **claim** is simply that, a claim to a water right, for a water use that predates the state's water permitting system (for surface water, 1917/1932, for groundwater, 1945). The validity of a claim can only be confirmed through judicial processes.

- A **permit** is permission by the state to develop a water right; it is not a final water right. A permit allows you to proceed with construction of the water system and start putting the water to beneficial use, in accordance with the terms of your permit.

- Ecology issues a **certificate** once the department confirms that all the conditions of the permit have been met. A Certificate of Water Right is the legal record of your water right, and is recorded at your county auditor's office. Once Ecology issues a certificate, the water right is considered appurtenant (attached) to the land on which the water is used.

The City's existing water rights are summarized in Table 1-1. Copies of water right certificates and permits are included in Appendix C. Included in this summary are the water right certificate number, the priority date, the quantity of instantaneous withdrawal or diversion (Q_i), and the annual water right (Q_a). An instantaneous withdrawal right represents the maximum pumping capacity of a well or maximum diversion rate for a spring or surface water source. An annual withdrawal right represents the total quantity of water that may be withdrawn or diverted during an entire year. The priority date provides a means of ranking water rights as junior or senior based on their date of application to the Department of Ecology (Ecology).

TABLE 1-1

Existing Water Rights Summary

Source Name	Certificate (C) or Permit (P) Number	Priority Date	Instantaneous Withdrawal, Q_i (gpm)	Annual Withdrawal, Q_a(1) (acre-ft/yr)
Westside Well(2)	(C) 2115	9/24/1941	539	867 (P)
Big Valley Springs (inactive)	(C) 5585	7/17/1952	449	723 (P)
Big Valley Shallow Wells (inactive)	(C) 8525	10/24/1960	90	145 (P)
Lincoln Well	(C) 6087	12/30/1966	475	396 (S)
Bus Barn Well	(C) G1-00643C	2/13/1969	100	160 (S)
Big Valley Well No. 1	(C) G1-23707C	10/14/1980	215	344 (S)
Pugh Well/Lincoln Well No. 2	(P) G1-25375P	1/10/1989	650	158 (P)/735 (S)
Big Valley Well No. 2	(P) G1-27192P	6/16/1993	600	672 (S)
Total			**3,118(3)**	**1,893(3)**

(1) P = Primary, S = Supplemental.
(2) The Westside Well water right was transferred from Crystal Springs in 2003.
(3) Only primary water rights are included in annual total.

The City holds six water right certificates and two permits. A report of examination dated December 10, 2009, clarifies that the City holds primary water rights for a total annual withdrawal of 1,893 acre-feet/year, or 1,690,000 gallons per day on average. Individual withdrawal limits are indicated on each groundwater certificate or permit as shown in Table 1-1.

Although the Big Valley Springs and Big Valley Shallow Wells are inactive, the water rights remain valid. The Crystal Springs Water right was transferred in 2003 to the Westside Well and the Bus Barn Well is an emergency source only. The City plans to transfer these rights to future sources as necessary.

SOURCE AND TREATMENT FACILITIES

The water system is supplied by five groundwater wells, located at four sites. Each well is described in the following sections and summarized in Table 1-2. The City owns three

other sources which are inactive: Big Valley Springs, Big Valley shallow wells, and Crystal Springs. The water rights of the spring sources have been transferred to usable pumping sources and are no longer in use. Lincoln Well No. 2 is a newly installed additional point of withdrawal for the Pugh Well but is still pending approval from DOH.

Big Valley Wells No. 1 and No. 2

The Big Valley Wells site is located north of the City limits off Big Valley Road NE. This facility includes two wells, called Big Valley No. 1 and No. 2, and a CMU building that houses the chlorination and fluoridation systems. Both wells pump through an 8-inch transmission main along Big Valley Road into the Low Zone distribution system.

Big Valley Well No. 1 provides 200 gpm of supply to the City's Low Zone. The well casing consists of 312 feet of 8-inch casing. The top of the casing extends 1.3 feet above ground level to an elevation of 81.3 feet. In 2002, the City replaced the well pump with a 16-stage submersible pump with a 40-hp motor that is rated for 215 gpm at 435 feet TDH.

Big Valley Well No. 2 provides 520 gpm of supply to the City's Low Zone. The well was drilled in 1993 and the casing consists of 20 feet of 16-inch surface casing and 538 feet of 12-inch casing. The top of the casing extends from 2.1 feet above ground level to an elevation of 82.1 feet. A 61-foot section of 6-inch screen is installed to 515 feet below the surface. In 1996, the City equipped the well with an 8-stage submersible pump and a 75-hp motor that is rated at 600 gpm at 370-feet TDH. The pump inlet screen is approximately 200 feet below the top of the well casing.

The City holds a water right certificate for 215 gpm of instantaneous withdrawal and 344 acre-ft/year of annual withdrawal from Big Valley Well No. 1. The City holds a water right permit for 600 gpm of instantaneous withdrawal and 672 acre-ft/year of annual withdrawal from Big Valley Well No. 2.

Pugh Well

The Pugh Well is located on the same site as the Pugh Reservoir and Lincoln Hill Standpipe. The 12-inch casing extends 310 feet below the surface. A 6-inch screen is installed between 280 feet to 310 feet below the surface. The well is equipped with a 4-stage submersible pump that produces approximately 480 gpm. The well was drilled in 1988, but the existing pump and motor were installed in 1998. City records indicate that the static water elevation is approximately 245 feet. Pump testing completed in 1998 indicate a drawdown of 90.8 feet at 758 gpm.

The Pugh Well supply contains high levels of iron bacteria. The City has made several attempts to resolve this problem, but none have been successful to date. Lincoln Well No. 2 was drilled in 2007 as an additional point of withdrawal for the Pugh Well water

right. Once Lincoln Well No. 2 is fully operational, the Pugh Well will become an emergency source only.

The City holds a water right permit for 650 gpm of instantaneous withdrawal, a primary withdrawal of 158 acre-ft/year and 735 acre-ft/year of supplemental annual withdrawal from the Pugh Well.

Lincoln Wells No. 1 and No. 2

Lincoln Well No. 1 is located on NE Lincoln Road at the northeast corner of the city limits. Lincoln Well No. 1 is housed in a CMU building separated into a well room and a chlorination room. The fluoridation equipment is located in the well room. In 2002, the City replaced the oil-lubricated line shaft turbine pump with a 4-stage submersible pump with a 60-hp motor that produces 475 gpm at 412-feet TDH. City records indicate that the static water elevation is approximately 245 feet and a dynamic water elevation of 170 feet.

Lincoln Well No. 2 is also located on NE Lincoln Road at the northeast corner of city limits approximately 1,800 feet south of Lincoln Well No. 1. This well was drilled in March 2007 to replace the Pugh Well, which has high levels of iron bacteria. The casing diameter is 16 inches and 265-feet deep. The pump is a 4 stage with a 100-hp motor that produces 650 gpm at 376-feet TDH. The well is an additional point of withdrawal for the Pugh Well water right. The well is housed in a CMU building that has a well room with fluoridation equipment and a separate chlorination room. Lincoln Well No. 2 is not currently in use, pending approval by DOH. The City expects approval as an emergency source in September 2014 and that the well will be online following the completion of a treatment plant in 2015.

The City holds a water right certificate for 475 gpm of instantaneous withdrawal and 396 acre-ft/year of annual withdrawal from Lincoln Well No. 1. Lincoln Well No. 2 is an additional point of withdrawal under the Pugh Well water right.

West Side Well

The West Side Well is located along Vetter Road NE, north of the city limits. The well provides approximately 500 gpm of supply to the West High Zone. The 12-inch casing extends to 750 feet below the surface. An 8-inch screen is installed between 610 feet to 710 feet below the surface. The well is equipped with a 12-stage submersible pump with a 100-hp motor that is rated for 650 gpm at 470-feet TDH. The well was drilled in 2002, equipped in 2004, and came online in late 2006. Drilling logs indicate a static water elevation of 216.9 feet in 2002. The well site has chlorination and fluoridation facilities housed in a CMU building.

The City holds a water right certificate for 539 gpm of instantaneous withdrawal and 867 acre-ft/year of annual withdrawal from the Westside Well. The Westside Well received approval from DOH and started contributing to the system in early 2008.

Bus Barn Well

The City recently installed the equipment necessary to reconnect the Bus Barn Well, also called the Nike Well, to the existing system. The Bus Barn Well will be used as an emergency backup and eventually a possible supplementary source for the West High Zone. The Bus Barn Well has been approved by DOH as a source for the City's water system.

Treatment

Each well site contains chlorination and fluoridation facilities except Bus Barn. Chlorination is achieved using bulk sodium hypochlorite diluted from 12.5-percent to 5-percent injected using a diaphragm metering pump. Fluoridation is achieved using a sodium fluoride saturator and a diaphragm metering pump. The City has standardized its treatment chemical storage and pumping equipment for all well sites.

Table 1-2 summarizes the City's source of supply facilities.

TABLE 1-2

Sources of Supply

Well Name	Year Drilled	Instantaneous Water Right (gpm)	Capacity(1) (gpm)	Discharge Zone	Treatment
Big Valley No. 1	1976	215	200	Low Zone	HOCl, F
Big Valley No. 2	1993	600	520	Low Zone	HOCl, F
Lincoln No. 1	1968	475	475	East High Zone	HOCl, F
Pugh Road	1988	650	480	East High Zone	HOCl, F
Lincoln No. 2(2)	2007	650	650	East High Zone	HOCl, F
Westside	2003	539	500	West High Zone	HOCl, F
Bus Barn	1959	100	100 (Emergency)	West High Zone	None
Total			**2,445(3)**		

(1) The capacity is the pump's maximum flow rate.
(2) Lincoln Well No. 2 is pending approval by DOH and is a supplemental source to the Pugh Road Well.
(3) Pugh Road Well is not included in total since Lincoln Well No. 2 is under the same water right. Lincoln Well No. 2 is expected to be fully operational in 2015.

STORAGE

The following sections provide a description of each of the City's storage facilities. Table 1-3 summarizes the design parameters for each reservoir.

Finn Hill Reservoir

The Finn Hill Reservoir is a 508,000 gallon welded steel tank constructed in 1981. This reservoir is located near Finn Hill Road, between Viking Way and SR 3 and provides storage to the Low Zone (244.5 ft HGL). The reservoir is 48 feet in diameter and has a base elevation of 207 feet and overflow elevation is 244.5 feet. Piping for the standpipe consists of a single 10-inch inlet/outlet pipe and a 6-inch overflow pipe. The site layout and piping was designed to accommodate the addition of a future second reservoir.

4th Avenue Reservoirs

The 4th Avenue Reservoirs are two identical 125,000-gallon concrete tanks constructed in 1974. The reservoirs are located on 4th Avenue and provide storage to the Low Zone (244.5 ft HGL). The reservoirs are 26 feet in diameter, have a base elevation of 213 feet, and an overflow elevation of 244.5 feet. Piping for each reservoir consists of a single 8-inch inlet/outlet pipe and a 6-inch overflow pipe. The inlet/outlet piping from the two reservoirs tie into a single 10-inch water main that connects to the system.

Wilderness Park Reservoir

The Wilderness Park Reservoir is a 1,036,000-gallon welded steel tank constructed in 1962. This reservoir is located near Hostmark Street and provides storage to the Low Zone (244.5 ft HGL). The reservoir is 66 feet in diameter and has a base elevation of 204 feet and overflow elevation is 244.5 feet. Piping for the reservoir consists of a single 8-inch inlet/outlet pipe and a 6-inch overflow pipe.

Raab Park Reservoir

The Raab Park Reservoir is a 150,000-gallon welded steel tank constructed in 1967. This reservoir is located inside Raab Park at the south end of Caldart Avenue and provides storage to the Middle Zone (396 ft HGL). The reservoir is 40 feet in diameter and has a base elevation is 380 feet and overflow elevation is 396 feet. Piping for the reservoir consists of a single 10-inch inlet/outlet pipe and a 6-inch overflow pipe.

Caldart Reservoirs

The Caldart Reservoirs are two identical 75,000-gallon concrete tanks constructed in 1990. These reservoirs provide storage to the Middle Zone (396 ft HGL). The reservoirs are 26 feet in diameter, have a base elevation of 377 feet, and an overflow elevation of 396 feet. Piping for each reservoir consists of a single 8-inch inlet/outlet pipe and a

6-inch overflow pipe. The inlet/outlet piping from the two reservoirs tie into a single 10-inch water main that connects to the system.

Pugh Road Reservoir

The Pugh Road Reservoir is an elevated 1,000,000-gallon steel hydro pillar constructed in 1993. The reservoir provides the sole storage for the East High Zone (514 ft HGL). The reservoir is 70 feet in diameter, has a ground elevation of 393 feet, a tank base elevation of 469 feet, and an overflow elevation of 514 feet. Piping consists of a 12-inch outlet pipe, an 8-inch inlet pipe, and an 8-inch overflow pipe.

Lincoln Hill Standpipe (Inactive)

The Lincoln Hill Standpipe is a 155,000-gallon welded steel tank constructed in 1976. Prior to construction of the Pugh Road Reservoir, the Lincoln Hill Standpipe provided storage to the East High Zone. The standpipe is 20 feet in diameter and has a base elevation of 403 feet and an overflow elevation of 469 feet. Piping for the standpipe consists of a single 8-inch inlet/outlet pipe and a 6-inch overflow pipe.

Since the construction of the Pugh Road Reservoir, the Lincoln Hill Standpipe is not normally used. When the Pugh Road Reservoir is taken offline for maintenance, the City uses the Lincoln Hill Standpipe to provide temporary storage to the East High Zone.

Olhava Standpipe

The Olhava Standpipe is a 993,000 gallon welded steel tank constructed in 2002. This standpipe provides the sole storage for the West High Zone (492 ft HGL). The standpipe is 38 feet in diameter, has a base elevation of 375 feet, and an overflow elevation of 492 feet. Piping consists of a 12-inch outlet pipe, a 12-inch inlet pipe that terminates 59 feet above the base, and an 8-inch overflow pipe.

TABLE 1-3

Storage Facilities

Storage Facility	Year Constructed	Capacity (gal)	Material	Diameter (ft)	Base Elevation (ft)	Overflow Elevation (ft)
Finn Hill	1981	508,000	Steel	48	207	244.5
4th Avenue No. 1	1974	125,000	Concrete	26	213	244.5
4th Avenue No. 2	1974	125,000	Concrete	26	213	244.5
Wilderness Park	1962	1,036,000	Steel	66	204	244.5
Raab Park	1967	150,000	Steel	40	380	396
Caldart No. 1	1990	75,000	Concrete	26	377	396
Caldart No. 2	1990	75,000	Concrete	26	377	396
Pugh Road	1993	1,000,000	Steel	70	479	514
Olhava	2002	993,000	Steel	38	375	492
Total		**4,087,000**				

BOOSTER STATIONS

The water system has three booster stations. Two are used to transfer supply between pressure zones and reservoirs and the other is used to create a small closed pressure zone. Each booster station is described in the following sections and summarized in Table 1-4.

Viking Avenue Booster Station

The Viking Avenue Booster Station is located on Viking Avenue, north of Finn Hill Road. The booster station is no longer in use and will be decommissioned in the next 6 years. This site may be used for a future pressure reducing station.

Wilderness Park Booster Station

The Wilderness Park Booster Station is located adjacent to the Wilderness Park Reservoir on Hostmark Street. The booster station consists of a single vertical turbine pump, 15-hp motor and check valve housed in an above-grade CMU building. The pump provides approximately 250 gpm. The booster station can transfer supply from the Low Zone and 4th Avenue Reservoirs to the Middle Zone and the Raab Park Reservoirs, although the City has rarely experienced a need for this facility.

Poulsbo Place Booster Station

The Poulsbo Place Booster Station is located in the Poulsbo Place development, west of the 4th Avenue Reservoirs. This booster station consists of two end-suction pumps, motors and a relief valve housed in a below-grade concrete vault. The pump is rated at 70 gpm at 95-feet TDH.

The Poulsbo Place Booster Station creates a small closed pressure zone for 30 homes that cannot be served directly from the 4th Avenue Reservoirs due to their high elevation. The booster station does not provide fire flows to its service area. A drop in pressure allows flow through an 8-inch check valve from the Low Zone.

TABLE 1-4

Booster Station Facilities

Booster Station	Year Installed	Capacity (gpm)	TDH (ft)	No. of Pumps	Suction Zone	Discharge Zone
Wilderness Park	Unknown	250	~150	1	Low Zone	Middle Zone
Poulsbo Place	2002	70	95	2	Low Zone	340 Zone(1)

(1) The 340 serves 30 homes and has an HGL of approximately 340 feet.

PRESSURE ZONES

The City's water system is separated into six pressure zones commonly referred to as the Low Zone, Middle Zone, East High Zone, West High Zone, 340 Zone, and Stendahl Zone. Each pressure zone is described in the following sections and the extent of each zone is provided on Figure 1-3.

Low Zone (244 Zone)

The largest pressure zone, by land area and number of service connections, is the Low Zone. The Low Zone includes the City's downtown core and many commercial and residential customers. The maximum hydraulic grade of the Low Zone is 244.5 feet and is set by the Finn Hill, 4th Avenue, and Wilderness Park Reservoirs. The primary sources of supply into the Low Zone are the Big Valley Wells; however, flow can be transferred through pressure reducing valves from the upper zones if necessary.

340 Zone

A small closed pressure zone is located within the Low Zone and serves 30 single-family homes. The hydraulic grade of this zone is 340 feet and is served by the Poulsbo Place Booster Station. Fire flow is supplied by gravity through a check valve. Figure 1-3 identifies the location of this area.

Middle Zone (396 Zone)

The Middle Zone is located east of the Low Zone between SR 305 and Caldart Avenue NE. Customers in the Middle Zone are primarily residential, although there are some commercial customers are located along SR 305. The maximum hydraulic grade of the Middle Zone is 396 feet and is set by the Raab Park and Caldart Reservoirs. The primary

sources of supply to the Middle Zone are the Mesford PRV and the Caldart PRV, which transfers water from the East High Zone and the Lincoln and Pugh Wells. The Wilderness Park Booster Station can transfer supply from the Low Zone to the Middle Zone, although this facility is used infrequently.

East High Zone (514 Zone)

The East High Zone is located east of the Middle Zone between Caldart Avenue NE and the city limits. This zone consists of mostly residential customers, but also includes the High School. The maximum hydraulic grade of the East High Zone is 514 feet and is set by the Pugh Reservoir. The only sources of supply to the East High Zone are the Pugh Well and Lincoln Wells.

West High Zone (492 Zone)

The West High Zone is located west of the Low Zone and was created in 2002 to serve the Olhava development. This zone serves all areas west of SR 3 and customers east of SR 3 that cannot be served by the Low Zone. The maximum hydraulic grade of the West High Zone is 492 feet and is set by the Olhava Standpipe. The primary sources of supply is the Westside Well.

Stendahl (350 Zone)

In 2007, two PRVs were installed to serve the newly constructed Stendahl Ridge neighborhood. The Stendahl PRV serves the zone from the east side on Viking Avenue and a second PRV on Finn Hill Road that serves the zone from the west side. Since the zone draws water from the West High Zone, the primary sources of supply are the Westside Well and the Viking Avenue Booster Station, which transfers supply from the Low Zone.

PRESSURE REDUCING VALVES

The City has 11 pressure reducing valve (PRV) stations. The location of each PRV is shown on Figures 1-3 and 1-4. Table 1-5 summarizes the PRVs and zones they typically serve. The interties are used only on an emergency basis.

TABLE 1-5

Pressure Relief Valves

PRV	Year Installed	Size (in)	Upstream Zone	Downstream Zone
Mesford	1974	2 3	East High	Middle
Caldart	2007	2 8	East High	Middle
Swanson	1967	3	Middle	Low
Wilderness Park	1962	3	Middle	Low
10th Avenue	1991	4 6	Middle	Low
Forest Rock	1996	2.5	Middle	Low
Vinland Intertie	1994	3 8	PUD	West High
NW Reliance Intertie	2011	3 8	PUD	West High
Finn Hill No. 2	1981	1.25 4	West High	Low
Stendahl	2007	2 6	West High	Stendahl Sub-Zone
Finn Hill No. 1	2007	2 6	West High	Stendahl Sub-Zone

DISTRIBUTION SYSTEM

The distribution system consists of approximately 55 miles of pipe, ranging in size from 4 inch to 12 inch in diameter. Table 1-6 lists the approximate lengths of pipes in the system by diameter.

TABLE 1-6

Pipe Lengths by Diameter

Pipe Diameter	Approximate Lineal Feet	Percentage of System
4-inch	16,626	6%
6-inch	52,769	18%
8-inch	159,667	55%
10-inch	16,088	5%
12-inch	45,276	16%
Total	**290,427**	**100%**

TELEMETRY AND CONTROL

The City has a Supervisory Control and Data Acquisition (SCADA) system with master control located at the Public Works maintenance facility. The system uses Wonderware software to provide a graphical user interface on a series of screens that allow the operator to view and control a variety of parameters at all source, storage, and booster station locations. The system allows the operator to view historical logs of system conditions and change the operational settings of many facilities.

ADJACENT PURVEYORS

The City's water system is adjacent to five water systems: Vinland, Gala Pines, Poulsbo Heights, Viewside, and Skookum Ranch. The locations of these systems are shown on Figure 1-5 and each system is described in the following sections.

VINLAND

The Vinland water system, owned by Kitsap PUD, lies to the west and north of the City's water system. An intertie between these two systems is located on Finn Hill Road and NW Reliance Street. The Vinland system serves 1,308 ERUs at this time and has an undetermined capacity. The northwest corner of the City's urban growth area is within the Vinland water system.

GALA PINES

The Gala Pines water system, owned by Kitsap PUD but separate from the Vinland system, is located northeast of the City's water system. The Gala Pines system serves 52 ERUs and is approved for 52 ERUs. The Gala Pines system is outside of the City's UGA.

SKOOKUM RANCH

The Skookum Ranch water system, owned by Washington Water Service Company, is located north of the City's water system. According to the DOH, the Skookum Ranch System serves 21 connections and is approved for 26 connections. The south east portion of the Skookum Ranch system is within the City's UGA.

POULSBO HEIGHTS

The Poulsbo Heights water system is owned by Kitsap PUD and is located north of the City's water system. The Poulsbo Heights system serves 32 ERUs and is approved for 32 ERUs. The Poulsbo Heights system is within the City's UGA.

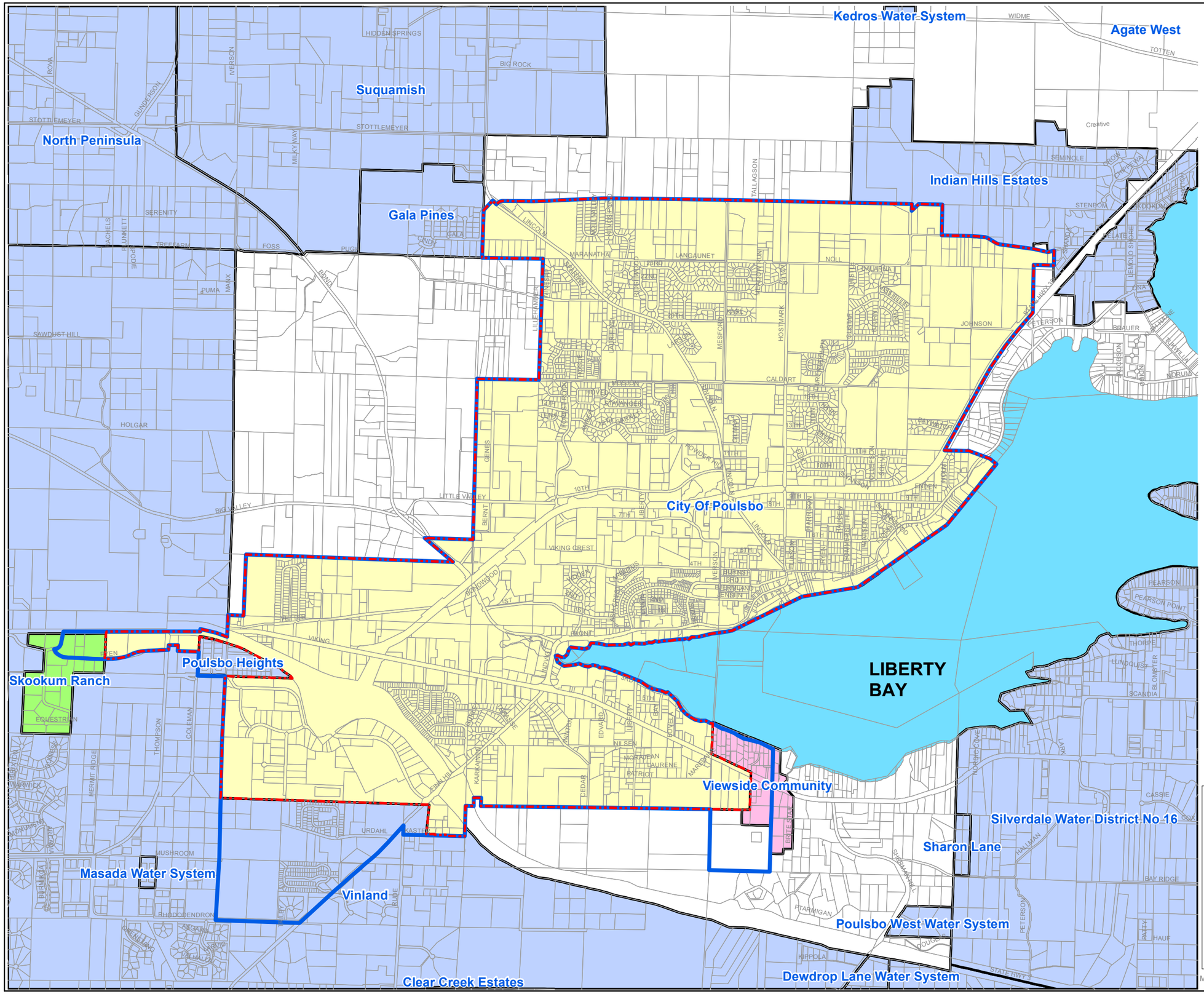

N

0 1,000 2,000 4,000 Feet

LEGEND:

- RETAIL SERVICE AREA
- UGA
- WATER
- PARCELS

ADJACENT PURVEYOR SERVICE AREA:

- CITY OF POULSBO
- WASHINGTON WATER SERVICE COMPANY
- KITSAP PUD
- VIEWSIDE COMMUNITY

SOURCE: KITSAP COUNTY & CITY OF POULSBO

CITY OF POULSBO

WATER SYSTEM PLAN
ADJACENT PURVEYORS
FIGURE 1-5

Gray & Osborne, Inc.
CONSULTING ENGINEERS

M:\Poulsbo\13548 Water System Plan\GIS\PURVEYORS.mxd

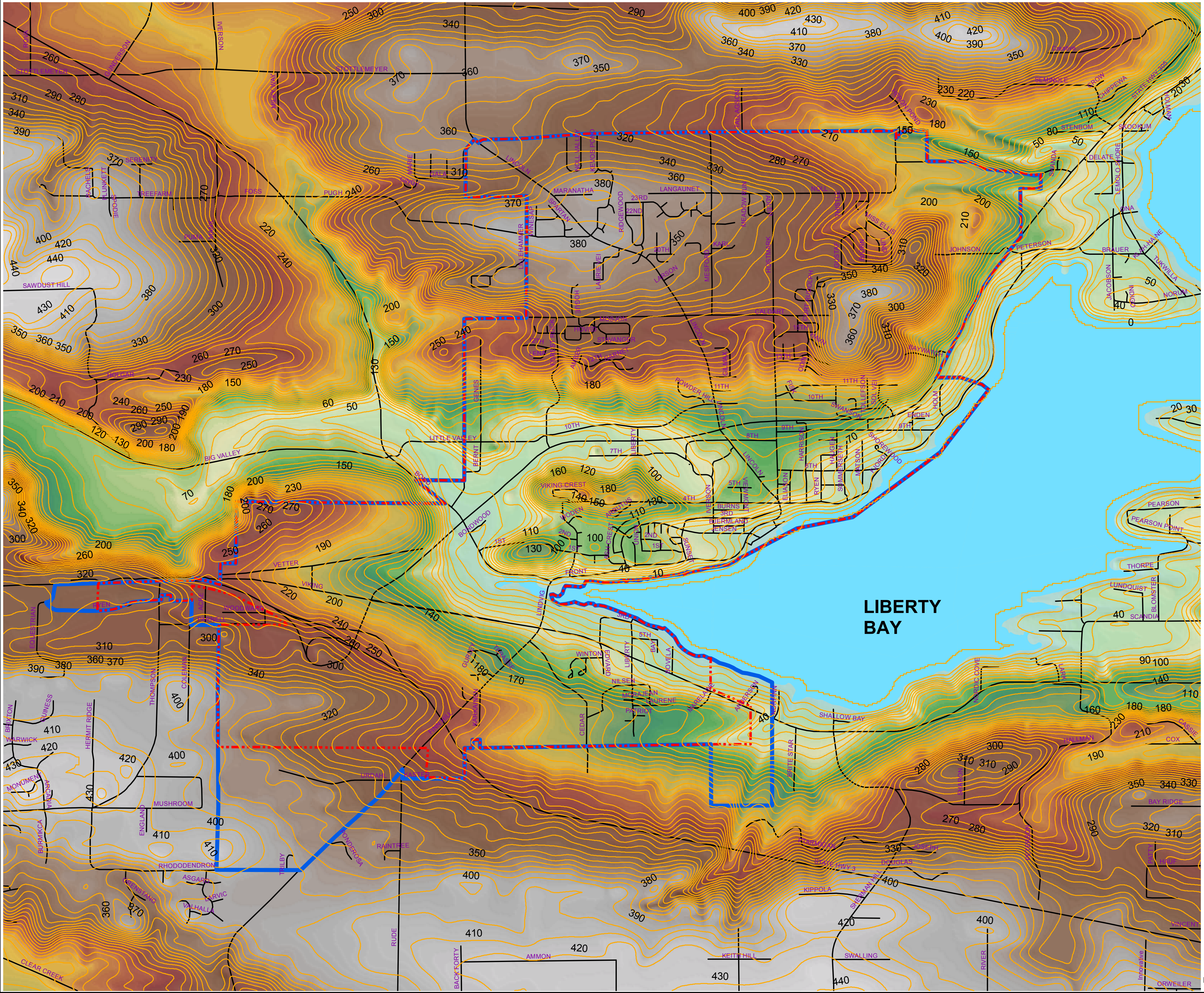

N

0 1,000 2,000 4,000 Feet

LEGEND:

- 10 FOOT CONTOURS (USGS INTERPOLATED)
- RETAIL SERVICE AREA
- UGA
- WATER

SOURCE: KITSAP COUNTY, USGS & CITY OF POULSBO

CITY OF POULSBO

WATER SYSTEM PLAN
TOPOGRAPHY MAP
FIGURE 1-6

Gray & Osborne, Inc.
CONSULTING ENGINEERS

M:\Poulsbo\13548 Water System Plan\GIS\TOPO.mxd

VIEWSIDE

The Viewside water system is a private water system and is located south of the City's water system along Viking Avenue. According to the KCCWSP, the Viewside system serves 48 connections. The Viewside system is partially within the City's UGA.

RELATED PLANNING DOCUMENTS

The following documents were consulted in the preparation of this Water System Plan:

- City of Poulsbo Comprehensive Plan, 2009
- City of Poulsbo Water System Plan, 2007
- City of Poulsbo Comprehensive Sanitary Sewer Plan, 2008
- Kitsap County Coordinated Water System Plan, 2005
- KPUD Water System Plan, 2011

SERVICE AREA CHARACTERISTICS

The City's water service area encompasses approximately 4.93 square miles and ranges from sea level to 360 feet. Figure 1-6 is a topographic map of the area in and around the City. The downtown area lies in the lower elevations near the shores of Liberty Bay. The service area is separated into six pressure zones to serves the varying service elevations.

ZONING AND FUTURE LAND USE

Zoning for the City is shown in Figure 1-7. The zoning designations are listed in Table 1-7. The City is in the process of updating its Comprehensive Plan. As part of this process the City is looking at its policies to accommodate the additional growth targeted for the City.

The following are the main types of land uses within the City and their specific classifications as indicated in the City's Municipal Code:

- Park (P): the primary zoning district for open space functions and recreation for the enjoyment of City residents or members of the north Kitsap community. This zoning is only for City owned parks.

- Residential Low (RL): the primary zoning district for single family detached residences of four to five dwelling units per acre, and permits compatible, related activities. These areas are intended to promote neighborhood livability.

- Residential Medium (RM): The primary district for multiple-family developments of six to ten dwelling units per acre. These residences should provide housing opportunities near employment and business centers and also promote use of public transit and efficient use of public infrastructure.

- Residential High (RH): provides appropriate locations for high density residential areas of eleven to fourteen dwelling units per acre.

- Downtown/Front Street (C-1): The commercial district for development in the geographic area of Downtown/Front Street. Encourages development of recreation amenities, tourist activities, and use of the shoreline to make downtown Poulsbo the cultural center and heart of the community.

- Viking Avenue (C-2): The commercial district for the area around Viking Avenue. For the development of commercial uses and activities that rely on fast and safe access to major transportation routes. This zoning promotes mixed used projects for people to live, work, and do other activities within walking distance.

- SR 305 Corridor (C-3): The commercial district for the area around the SR 305 corridor. This zoning will encourage this area to be the business hub of the community and provide the most frequently needed consumer goods to the local population.

- College Market Place (C-4): The commercial district for development in the geographic area of College Market Place. This designation is for businesses dependent on vehicular access from major transportation routes such as large retailers and national chain retailers.

- Office Commercial Industrial (OCI): This zoning provides are for business and professional offices. This may include corporate headquarters, research and development facilities, light industry and complementary educational, and recreational uses.

- Business Park (BP): This zoning is located in the College Market Place development and is intended to enhance the economic base of the City by providing areas for larger scale buildings for business or warehouses that the OCI or LI zoning may not support.

- Light Industrial (LI): For light and clean industries of manufacturing, fabrication, warehouses, assembly and production, and research facilities.

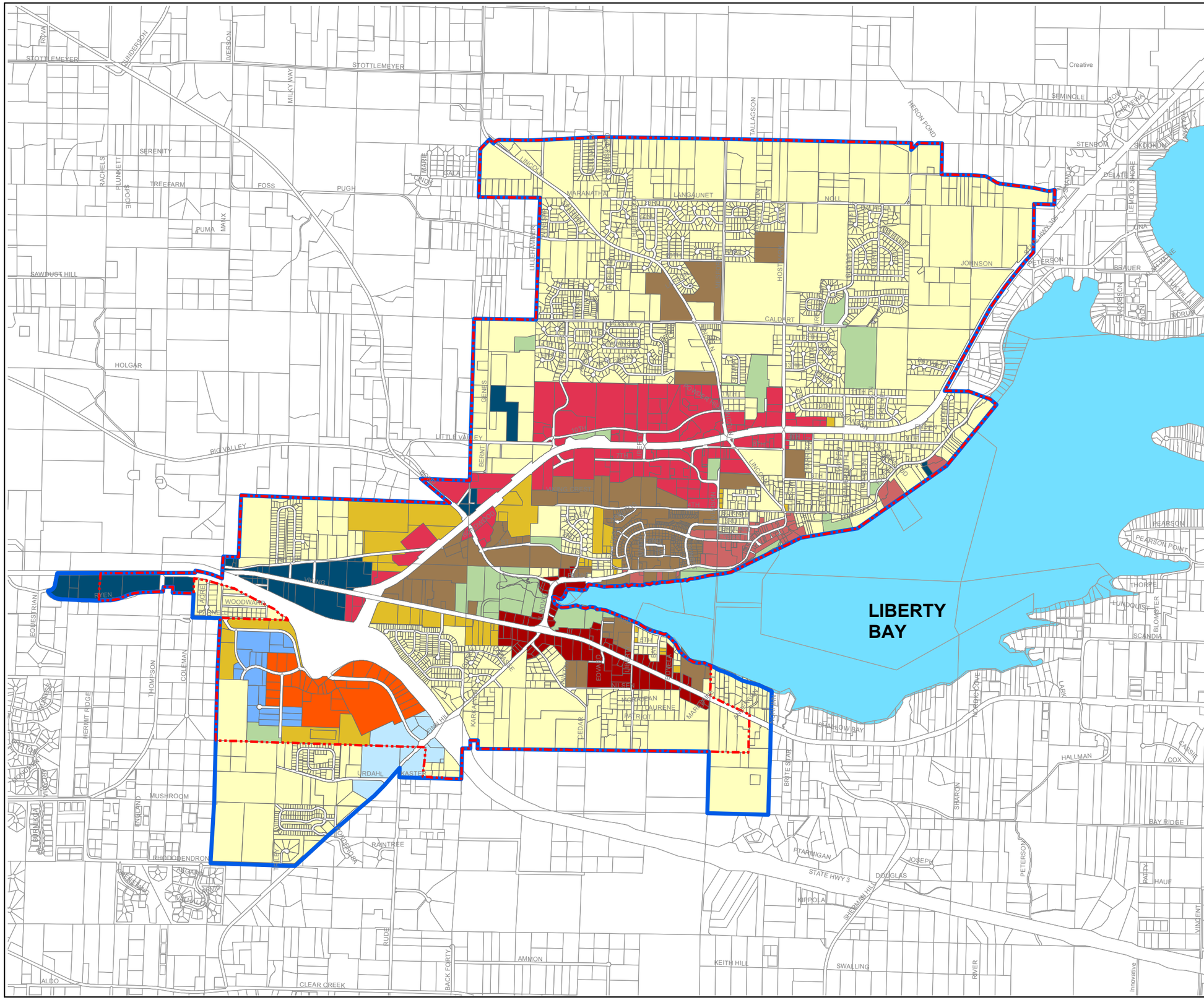
LIBERTY BAY
STOTTLEMEYER
SERENITY
TREEFARM
FOSS
PUGH
PUMA
MANX
SAWDUST HILL
HOLGAR
BIG VALLEY
LITTLE VALLEY
MARANATHA
LANGAUNET
NOLL
CALDART
JOHNSON
PETERSON
BRAUER
SEMINOLE
STENBOM
SKOOKUM
DELATE
HERON POND
TALLAGSON
HOST
LINCOLN
GENIS
BERNT
VIKING
WOODWARD
RYEN
EQUESTRIAN
THOMPSON
COLEMAN
MERMIT RIDGE
MUSHROOM
RHODODENDRON
RAINTREE
URDAHL
KASTER
KARLA
EDWARD
LINDSTROM
NILSEN
MONTAGAN
LAURENE
PATRIOT
MARSHALL
CEDAR
SHALLOW BAY
BRITE STAR
NORTH COVE
LARK
HALLMAN
COX
SHARON
BAY RIDGE
PTARMIGAN
JOSEPH
DOUGLAS
STATE HWY 3
KIRPOLA
SHERMAN HILL
PEARSON
PEARSON POINT
THORPE
LUNDQUIST
SCANDIA
BLOMSTER
PATTY
LIHAUF
VINCENT
RIVER
SWALLING
KEITH HILL
AMMON
RUDE
BACK FORTY
CLEAR CREEK
ALDO
Innovative
Creative
N
0 1,000 2,000 4,000
Feet
LEGEND:
WATER SERVICE AREA
UGA (MAY, 2011)
WATER
PARCELS
CITY OF POULSBO ZONING:
Park
Residential Low (4 to 5 units/ac)
Residential Medium (6 to 10 units/ac)
Residential High (11 to 14 units/ac)
C-1 Downtown/Front Street
C-2 Viking Avenue
C-3 SR 305 Corridor
C-4 College MarketPlace
Office Commercial Industrial
Business Park
Light Industrial
SOURCE: KITSAP COUNTY & CITY OF POULSBO
CITY OF POULSBO
WATER SYSTEM PLAN
ZONING MAP
FIGURE 1-7
Gray & Osborne, Inc.
CONSULTING ENGINEERS
M:\Poulsbo\13548 Water System Plan\GIS\ZONING.mxd

TABLE 1-7

Zoning Designations

Zoning Designation	Abbreviation	Density	Acres
Park	P	N/A	114
Residential – Low Density	RL	4–5 units/acre	1,910
Residential – Medium Density	RM	6–10 units/acre	144
Residential – High Density	RH	11–14 units/acre	232
Downtown/Front Street	C-1	NA	39
Viking Avenue	C-2	NA	69
SR 305 Corridor	C-3	NA	226
College Market Place	C-4	NA	76
Office Commercial Industrial	OCI	NA	42
Business Park	BP	NA	34
Light Industrial	LI	NA	84
Total			**2,970**

SERVICE AREA POLICIES AND CONDITIONS OF SERVICE

DOH has established a list of policies that should be addressed in a water system plan. The following sections describe the City's policies that relate to the water utility.

APPLICATION FOR NEW SERVICES

Applicants for new water services must adhere to water availability requirements outlined in the City Municipal Code Chapter 13.06.210. Per the Municipal Water Law and RCW 43.20.260, the City has a duty to provide retail water service within its retail service area if: (1) Its service can be available in a timely and reasonable manner; (2) the municipal water supplier has sufficient water rights to provide the service; (3) the municipal water supplier has sufficient capacity to serve the water in a safe and reliable manner as determined by the Department of Health; and (4) it is consistent with the requirements of any comprehensive plans, development regulations or any other applicable plan or regulation.

WHOLESALE WATER

The City allows customers to purchase wholesale water only if an agreement exists between the City and a wholesale customer. The City currently has no wholesale water supply customers.

WATER WHEELING

The City allows for the wheeling of water only if an agreement exists between the City and adjacent water system. The City and PUD have a water wheeling agreement to provide water service to the Lone Pine development. Supply is provided to Lone Pine from the City's system. The City receives supply from the PUD if necessary. Water is metered at both point of entry and exit from the City's system. This agreement was signed in 2006 but the development was never built.

DESIGN AND CONSTRUCTION STANDARDS

The City has adopted design and construction standards for its water utility. Design and construction standards are discussed in detail in Chapter 8 and included in Appendix D.

DIRECT CONNECTION AND REMOTE SYSTEM POLICY

The City does not allow remote water systems to operate within the water service area and does not manage satellite water systems outside the contiguous water service area.

OUTSIDE CITY LIMITS SURCHARGES

Customers located outside of the City limits are charged a higher rate for water service. Current water rates for customers inside and outside the City limits are provided in Chapter 9.

LATECOMER AGREEMENTS

The City has procedures for allowing latecomer agreements for facilities with an actual construction cost of greater than $5,000. The Public Works Director is responsible for determining the improvement cost and benefited area. The Finance Director is responsible for preparing the latecomer agreement. Future development within the benefited area will not be permitted without prior payment to the City by the benefited property.

FACILITY OVERSIZING

The City may pursue facility oversizing in situations where a City funded and developer funded project overlap. The Public Works Director is responsible for determining the fair cost paid by the City to the developer for oversizing a facility.

SYSTEM EXTENSIONS

All new water main extensions necessary to provide service to new developments must be paid for and constructed by developers. These facilities become the property of the

City once they are approved for use by the City. Water system extensions must meet the design and construction standards of the City's Public Works Department.

CROSS-CONNECTION CONTROL PROGRAM

The installation or maintenance of a cross-connection, which will allow contaminants or supply of water from other sources, is prohibited. Any such cross-connections shall be discontinued or eliminated. Connections that cannot be discontinued and/or eliminated shall require the installation or an approved backflow protection device and shall be regularly inspected and tested in accordance with the City's Cross-Connection and Backflow Prevention Manual.

INTERTIES

The City has two interties with the Kitsap County Public Utility District's (PUD) Vinland water system as shown on Figures 1-3 and 1-4. The Vinland and NW Reliance intertie locations are shown on Figure 1-3. These interties are used as an emergency source and as fire flow storage for the West High Zone.

In 2011, the City and PUD reached an agreement that allows the City to receive water from the Vinland System via these two interties. The PUD has a storage surplus that exceeds the storage deficiency of the West High Zone. The PUD has planned infrastructure improvements that will be sufficient to meet the increasing storage deficiencies in West High Zone as identified in the planning horizon out to 2026.

Intertie agreements between the City and PUD are included in Appendix B.

CHAPTER 2

BASIC PLANNING DATA

INTRODUCTION

This chapter presents basic planning data and water demand forecasts needed to assess the current and future capabilities of the water system to provide service. This chapter provides information on the existing population and future population projections, water use data, and water demand associated with the planning element known as an equivalent residential unit (ERU). This chapter also includes projected water demands for 6-, 10-, and 20-year planning periods.

HISTORICAL WATER SYSTEM DEMANDS

POPULATION

The City's population growth rate over the last 7 years is presented in Table 2-1. Over the last 7 years, approximately 1,769 new residents have become part of the City's retail service area (RSA). Population growth during the 2007-2013 period averaged 4.4 percent.

The retail service area population is slightly smaller than the population within the City limits. The northwest part of the City has several neighborhoods that are served by the PUD. This area is part of the City's overall population but is not included in the retail service area. As show in Table 2-2, approximately 18 customers are outside of the City limits but connected to the City's water system. Based on the Kitsap County Coordinated Water System Plan (KCCWSP), 2.68 is the average number of residents per household. These 18 connections therefore serve a population of approximately 43. Both the Kitsap PUD Vinland water system and the private Viewside Community water system operate within the City limits. The City's residents being served by the other water systems are included in the population projections provided by the City. From an aerial count of houses in these areas, an approximate population was subtracted to get the RSA population. The approximate population outside the RSA but inside the City's planning area is assumed to grow at the same rate the City has projected and will be subtracted from future population projections so that this Plan is only looking at the RSA.

TABLE 2-1

Historical Population 2007 to 2013

Year	City Population	PUD Served Population	Outside City Limits Population	RSA Population	Annual Growth Rate
2007	7,560	186	56	7,430	
2008	7,840	193	50	7,697	3.6%
2009	8,920	223	51	8,748	13.7%
2010	9,200(1)	230	46	9,016	3.1%
2011	9,245	231	43	9,056	0.4%
2012	9,360	234	43	9,169	1.2%
2013	9,585	240	43	9,388	2.4%

(1) U.S. Census estimated population.

WATER SERVICE CONNECTIONS BY CUSTOMER CLASS

Table 2-2 provides the number of water service connections between 2007 and 2013. An average of 74 water service connections has been added to the system annually over the last 7 years which corresponds to an average annual growth rate of approximately 2.3 percent. This average growth is for all connections of the system. When looking specifically at single family residences, they grew at approximately 77 connections per year, a 2.4 percent annual growth rate, for the same 7-year period. Single-family connection growth is higher than total system growth because the number of connections declined annually in some classes. The economic downturn of 2008 had a negative impact on businesses within the City and specifically on Viking Avenue. This could be a factor in the decrease of non-residential connections for several years after 2008.

TABLE 2-2

Water Service Connections

Customer Type	Total Water Service Connections						
	2007	2008	2009	2010	2011	2012	2013
Single-Family	2,284	2,437	2,551	2,646	2,667	2,702	2,741
Multi-Family	141	141	141	140	139	139	139
Non-Residential(1)	367	376	349	320	319	325	325
Irrigation	129	142	147	152	160	164	166
Outside City Limits Single-Family	21	19	19	17	16	16	16
Outside City Limits Non-Residential	2	2	2	2	2	2	2
Total	**2,945**	**3,117**	**3,209**	**3,276**	**3,303**	**3,348**	**3,389**

(1) Non-Residential is commercial and construction accounts.

WATER USE

Water Production

Table 2-3 provides a summary of the total volume of water produced by each source over the last 7 years from metered records. No production is shown for the Westside Well in 2007 since it was not approved for use by the DOH until March of 2008. Supply from the PUD has not been used since 2004 so it is not shown in the table.

TABLE 2-3

Production by Source

Year	Production (gpd)					
	Big Valley Well No. 1	Big Valley Well No. 2	Lincoln Rd Well	Pugh Road Well	Westside Well(1)	Total
2007	144,022	338,600	280,247	141,036	0	903,904
2008	139,765	330,115	272,967	99,899	75,404	918,150
2009	126,408	330,529	277,392	115,266	114,605	964,200
2010	71,203	343,792	281,488	76,967	105,195	878,644
2011	42,071	384,074	239,104	88,140	107,830	861,219
2012	61,399	341,626	245,404	89,128	121,385	858,943
2013	30,408	369,973	263,545	73,614	131,668	869,208

(1) The Westside Well came online in early 2008.

Table 2-4 identifies the average day production, maximum day production, and corresponding peaking factor for the years 2007 through 2013. In this period, the City's maximum day factor averaged 2.30. This peaking factor will be used to project future peak day production. The maximum day production values are from metered records.

TABLE 2-4

Average and Maximum Day Production

Year	Total Average Day Production (gpd)	Total Maximum Day Production (gpd)	Peaking Factor
2007	903,904	2,093,000	2.32
2008	918,150	2,032,000	2.21
2009	964,200	2,181,000	2.26
2010	878,644	2,143,000	2.44
2011	861,219	1,714,000	1.99
2012	858,943	2,122,000	2.47
2013	869,208	2,095,000	2.41
Average			**2.30**

An average per capita water usage was determined based on 2007 to 2013 average day production and service area population. Table 2-5 shows that during the previous 7-year period the average production needed per capita was 104 gpd. The per capita value is a good benchmark to project future demands since this value is representative of the typical commercial and residential usage and water system losses for the City. In the previous 7-year period the per capita use has steadily declined.

TABLE 2-5

Per Capita Water Usage

Year	Retail Service Area Population	Average Daily Production (gpd)	Per Capita Use (gpcd)
2007	7,430	903,904	122
2008	7,697	918,150	119
2009	8,748	964,200	110
2010	9,016	878,644	97
2011	9,056	861,219	95
2012	9,169	858,943	94
2013	9,388	869,208	93
Average			**104**

Water Consumption

The water consumption for 2007 through 2013 for each of the City's customer classes is listed in Table 2-6. Single-family residential customers account for approximately 50 percent of the City's meter water usage.

The City also tracks unbilled metered usage dating back to 2009. Some sources for unbilled usage include routine water main flushing, water usage from the City for vactor trucks or hydroseeders, or construction usage before residential or commercial meters were installed. The unbilled metered usage is displayed in Table 2-7.

TABLE 2-6

Consumption by Customer Class

Customer Class	Average Day Annual Consumption(gpd)						
	2007	**2008**	**2009**	**2010**	**2011**	**2012**	**2013**
Single-Family	387,085	400,088	445,658	407,248	401,465	405,273	410,580
Multi-Family	159,605	149,449	152,610	134,460	136,126	137,783	132,818
Non-Residential	177,544	173,052	163,726	165,738	156,930	157,190	154,938
Irrigation	84,417	77,831	85,864	70,843	84,473	86,106	87,836
Outside City Limits Single-Family	3,168	2,461	2,654	2,205	1,973	2,046	1,881
Outside City Limits Non-Residential	61	57	12	4	43	43	29
Total Bill Consumption	**811,881**	**802,938**	**850,525**	**780,498**	**781,010**	**788,441**	**788,083**
Unbilled Metered Consumption(1)	0	0	15,590	12,831	11,618	9,496	11,099
Total Authorized Consumption	**811,881**	**802,938**	**866,116**	**793,329**	**792,628**	**797,937**	**799,182**

(1) Unbilled Metered Consumption sources were not recorded prior to 2009.

TABLE 2-7

Unbilled Metered Consumption

Metered Use	Average Day Annual Volume (gpd)				
	2009	**2010**	**2011**	**2012**	**2013**
Kitsap PUD	0	0	646	0	0
Flushing	10,351	9,814	7,975	8,858	10,008
Bulk Water(1)	77	0	680	0	0
Construction(2)	1,308	1,306	606	638	1,091
Fire Department	55	0	0	0	0
Adjustments(3)	3,799	1,711	1,711	0	0
Total Unbilled	**15,590**	**12,831**	**11,618**	**9,496**	**11,099**

(1) Bulk water is typically water used to fill City vactor trucks or Hydroseeders
(2) Construction usage before residential or commercial meters are installed and used.
(3) Adjustments made from billing issues

High Usage Customers

The ten customers with the greatest water use in 2013 are summarized in Table 2-8 along with the annual water consumption and number of equivalent residential units (ERUs) which are discussed further on. These customers account for approximately 15 percent of the total billed consumption in 2013.

TABLE 2-8

High Usage Customers

Customer	Annual Consumption (gpd)	Number of ERUs(1)
Poulsbo Mobile Home Park	18,823	126
Liberty Ridge at Poulsbo	15,142	101
Laurelhurst Apartments Co	12,896	86
Martha & Mary Health	12,773	85
Guardian Management LLC	10,681	71
Professional Property Management	10,306	69
Walmart TRS LLC Store 5272	9,326	62
City of Poulsbo	8,816	59
P.P. Homeowners Association	8,761	59
Town & Country Markets Inc	8,482	57
Total	**116,008**	**776**

(1) Based on the 2013 ERU value of 150 gpd/ERU. See Table 2-11.

Seasonal Variation

Seasonal variation in water use has also been examined. In 2013, summer usage accounted for approximately 38 percent of annual usage, and each other season accounted for between 18 to 24 percent. Table 2-9 summarizes seasonal usage by customer class for the year 2013.

TABLE 2-9

Seasonal Variation by Customer Class 2013

Customer Class	Winter (Jan-Mar, gal)	Spring (Apr-Jun, gal)	Summer (Jul-Sep, gal)	Fall (Oct-Dec, gal)
Single-Family	28,070,944	36,253,316	55,702,812	29,834,728
Multi-Family	10,982,136	12,308,340	14,737,096	10,451,056
Non-Residential	12,101,892	14,558,324	16,829,252	13,063,072
Irrigation	678,436	6,564,448	23,057,848	1,759,296
Outside City Limits Single-Family	133,892	157,080	235,620	160,072
Outside City Limits Non-Residential	2,992	2,244	1,496	3,740
Total	51,970,292	69,843,752	110,564,124	55,271,964

As can be seen in Table 2-9, summer use accounts for over 72 percent of annual use for irrigation customers. This indicates an opportunity to decrease annual demand by curtailing irrigation uses.

Distribution System Leakage

Distribution System Leakage (DSL) is all unauthorized uses, water system leakage, and any authorized uses the water system does not track (WAC 246-290-820(2)). Typical DSL sources include any water loss due to leaks, unauthorized uses such as illegal service connections, accounting errors, inaccurate source and customer meters, and water leaving the system for unmetered and/or unestimated usage such as flushing of water mains, fire flows, and use by unmetered services.

Table 2-10 shows the City's production, consumption, and DSL for 2007 through 2013. The unbilled consumption is authorized use and is tracked and so it is not counted as DSL. The DSL is the difference between the production and authorized consumption which includes billed and unbilled metered usage. The City's DSL has ranged from a high of 12.5 percent in 2008 to a low of 7.1 percent in 2012. If the three year rolling average is below the 10 percent threshold established by WAC 246-290-820(1)(b)(i), then the water system is in compliance and does not need to create a water loss control action plan. From 2011 to 2013 the three year rolling average is 7.7 percent so the water system is below the threshold and in compliance.

The City's DSL is low compared to many other communities. During the previous 7 years the City has put efforts into reducing DSL by fixing known leaks and replacing old water mains. The City's 3-year rolling average has decreased every year for the past 5 years.

TABLE 2-10

Distribution System Leakage

Year	Production (gpd)	Billed Consumption (gpd)	Unbilled Consumption (gpd)	DSL (gpd)	DSL (%)	3-Year Rolling Average (%)
2007	903,904	811,881	NA(1)	92,023	10.2%	NA
2008	918,150	802,938	NA(1)	115,212	12.5%	NA
2009	964,200	850,525	15,590	98,084	10.2%	11.0%
2010	878,644	780,498	12,831	85,314	9.7%	10.8%
2011	861,219	781,010	11,618	68,591	8.0%	9.3%
2012	858,943	788,441	9,496	61,006	7.1%	8.3%
2013	869,208	788,083	11,099	70,027	8.1%	7.7%

(1) Unbilled Consumption was not tracked until 2009.

The City has tracked unbilled metered consumption for 5 years. The 5-year average unbilled consumption is 1.4 percent of total production. Approximately this much unbilled consumption can be expected annually.

EQUIVALENT RESIDENTIAL UNITS

The concept of Equivalent Residential Units (ERUs) is a way to express water use by non-residential customers as an equivalent number of residential customers. Consumption ERUs are calculated by dividing the total volume of water utilized in the single-family residential (SFR) customer class, including both in and out of city limits, by the total number of active residential connections. This number defines the average SFR water use. The volume of water used by other customer classes can then be divided by the average SFR water use to determine the number of equivalent residential units utilized by other customer classes. Table 2-11 summarizes the City's ERU value for 2007 through 2013.

TABLE 2-11

Equivalent Residential Units

Year	Single-Family Consumption (gpd)	Single-Family Connections(1)	ERU Value (gpd/ERU)
2007	390,253	2,305	169
2008	402,549	2,456	164
2009	448,312	2,570	174
2010	409,453	2,663	154
2011	403,438	2,683	150
2012	407,319	2,718	150
2013	412,462	2,757	150
		Average	**159**

(1) Includes both in and outside City limits connections.

As shown in Table 2-11, the average daily single family residential water use for the City from 2007 to 2013 (which is equivalent to one ERU) ranged from a high of 174 gpd/ERU in 2009 to a low of 150 gpd/ERU from 2011 to 2013. As a comparison, the *2007 Water System Plan* used an ERU value of 195 gpd/ERU. The ERU values in Table 2-11 are derived from consumption data and do not include DSL or unbilled metered consumption. If we adjust the ERU value to include the 7.7 percent DSL and 1.4 percent for unbilled metered consumption, then 176 gpd/ERU is a rounded up representation of production required for an equivalent single-family unit over a 7-year average. For purposes of quantifying future production demands, the adjusted production ERU value of 176 gpd/ERU is used.

The ERUs for all customer classes, based on the 2013 consumption data and a consumption ERU value of 150 gpd/ERU, is shown in Table 2-12 for 2013. The Total Average Day metered water production in 2013 equals 869,208 gpd, or 5,811 ERUs (869,208 gpd/150 gpd/ERU). The consumption ERU value of 150 gpd/ERU is used for this table only.

TABLE 2-12

ERUs per Customer Class

Customer Class	2013 Average Day Consumption (gpd)	2013 ERUs
Single-Family	410,580	2,744(1)
Multi-Family	132,818	888
Non-Residential	154,938	1,036
Irrigation	87,836	587
Outside City Limits Single-Family	1,881	13(1)
Outside City Limits Non-Residential	29	0.2
Total Consumption	**788,083**	**5,269**
Unbilled Metered Consumption	11,099	74
DSL	70,027	468
Total System	**869,208**	**5,811**

(1) Does not match connections from Table 2-2 since ERUs are calculated using single-family and outside City limits single-family data.

PROJECTED WATER DEMANDS

Growth in the City was expected to increase dramatically following the 2007 Water System Plan. The global financial crisis of 2008 stunted the expected growth of the City after 2009 as shown in Table 2-1. As a result, development drastically slowed down but growth is starting again and is primarily occurring along the far east and northwest boundaries of the City. However, undeveloped and under-developed parcels will also be developed within the existing City limits.

Projected Population

The 6-year and 20-year planning period growth are based upon the City of Poulsbo's GMA total poplation allocation of 14,808 assigned by Kitsap County through the Kitsap Countywide Planning Policies. A constant annual growth rate from 2014 to 2034 was assumed to project the annual "City Population" depicted in column 1 of Table 2-13.

The portion of the city limits that is outside of the City's water service area, but within its city limits, is served by PUD. The population growth assumption for this area was based upon a land capacity analysis that identified the number of dwelling units vacant and underutilized acreage could support based upon zoned density. The projected number of dwelling units was multiplied by the City's household size of 2.3 to arrive at a projected total population. This population number was then projected out annually from 2014 to 2034, and is included in Table 2-13 as "PUD Served Population."

To project the population growth outside of the city limits and outside of the City's water service area, but within the City's Urban Growth Area, data from the KCCWSP was used. The average number of people per household (2.68) was multiplied by the number of water service connections outside the city limits to find the approximate population. The KCCWSP uses a compound growth rate of 1.35 percent, and this was used to project the annual growth rate until the year 2034. This represents a small area and the population growth is expected to be minimal as illustrated in Table 2-13 "Outside of City Limits Population" column.

To arrive at the expected population growth for the City's water service area, the annual growth protected for the City was reduced by the "PUD Served Population" and the "Outside City Limits Population." The remaining population – "RSA Population" – represents the City's water service area; it is this population growth that will be utilized in the remainder of this Plan in forecasting water usage and capital needs.

TABLE 2-13

Projected Population 2014 to 2034

Year	City Population(1)	PUD Served Population(2)	Outside City Limits Population	RSA Population	Annual Growth Rate
2014	9,809	246	44	9,607	2.3%
2015	10,038	274	44	9,809	2.1%
2016	10,273	303	45	10,015	2.1%
2017	10,513	331	45	10,227	2.1%
2018	10,759	359	46	10,446	2.1%
2019	11,010	387	47	10,670	2.1%
2020	11,239	416	47	10,870	1.9%
2021	11,473	444	48	11,077	1.9%
2022	11,711	472	49	11,288	1.9%
2023	11,955	501	49	11,503	1.9%
2024	12,183	529	50	11,704	1.7%
2025	12,416	557	51	11,909	1.8%
2026	12,653	585	51	12,119	1.8%
2027	12,894	614	52	12,332	1.8%
2028	13,140	642	53	12,551	1.8%
2029	13,366	670	53	12,750	1.6%
2030	13,596	699	54	12,952	1.6%
2031	13,831	727	55	13,158	1.6%
2032	14,069	755	56	13,369	1.6%
2033	14,311	783	56	13,584	1.6%
2034	14,557	812	57	13,802	1.6%

(1) 20-year planning period population is based upon the 14,808 population forecast allocated to the City by Kitsap Countywide Planning Policies. The remaining years are interpolated annual for the purposes of water system planning.

Projected ERUs

The ERU growth for the 6-year planning period also takes into account the residential and commercial projects that have been approved by the City, but not yet constructed or fully built-out. A number of these residential and commercial projects moved into construction in 2014, indicating a capital investment by the developer and likelihood that the project will be developed. Combined, these are assumed to represent 749 total ERUs and are expected to be constructed within the 6-year planning period.

The ERUs to be completed in the 6-year planning period are estimated assuming that each approved but not yet built single-family unit represents one ERU. Overall growth in the 6-year planning period inside the RSA is 14 percent including residential and commercial connections. Growth in the 20-year planning period is less certain, but expected to be less than the 6-year growth rate. Actual growth will be monitored and revised as appropriate through the 6-year water system plan update cycle.

Projected Water Use

As shown in Table 2-2 the number of water system customers has continually grown throughout the past 7 years. Water usage patterns change depending on many factors including weather, attitude towards conservation, availability of water use saving devices, family size, and land use. Projections of future water use do not attempt to predict the variability of these factors, but rather show a combination of historical average water use patterns and expected future growth rates.

Table 2-14 shows the projected population, number of ERUs including ERUs for DSL and unbilled authorized consumption, and water use through the 20-year planning period assuming no change in the ERU value and a constant DSL percentage. The average per capita use over the last seven years was the basis for projecting future demand. The average per capita usage and the projected population was used to project the average day demand for the 20-year planning period.

As shown in Table 2-4, the maximum day production has averaged approximately 2.3 times the average day production over the last 7 years. This peaking factor was used to project maximum day production requirements through the 20-year planning period.

Projected Peak Hour Water Demand

The maximum quantity of water produced over a 1-hour period during a maximum day demand is the peak hour demand. The City does not have precise records of peak hour demand. The DOH *Water System Design Manual* provides a methodology for calculating peak hour demand (PHD). The equation has been structured to accommodate the ranges of peak hourly to maximum daily demand ratios reported as a function of system size in

the literature and by various water systems in Washington. The generalized equation is as follows:

$$PHD = (MDD/1440)[(C)(N) + F] + 18$$

Where:

PHD = Peak Hourly Demand, (gallons per minute, gpm)
C = Coefficient Associated with Ranges of ERUs
N = Number of Service Connections, ERUs
F = Factor Associated with Ranges of ERUs
MDD = Maximum Day Demand, (gpd/ERU)

The values for C and F of the peak hour demand formula are taken from the DOH *Water System Design Manual*, Table 5-1, page 33. C is equal to 1.6 and F is equal to 225 for a system the size of the City's.

Table 2-14 shows the projected average day, maximum day and peak hour production requirements through 2034.

TABLE 2-14

Projected Production Requirements

Year	RSA Population(1)	Average Day Demand (gpd)(2)	DSL and Unbilled Metered Consumption Volume (gpd)(3)	Maximum Day Production (gal)(4)	Maximum Day Production (gpm)(4)	Peak Hour Production (gpm)(5)	Total ERUs(6)
2014	9,607	1,001,800	90,900	2,304,200	1,600	2,640	5,692
2015	9,809	1,022,900	92,800	2,352,700	1,630	2,700	5,812
2016	10,015	1,044,400	94,700	2,402,200	1,670	2,750	5,934
2017	10,227	1,066,500	96,700	2,453,000	1,700	2,810	6,060
2018	10,446	1,089,300	98,800	2,505,500	1,740	2,870	6,189
2019	10,670	1,112,700	100,900	2,559,300	1,780	2,920	6,322
2020	10,870	1,133,600	102,800	2,607,400	1,810	2,980	6,441
2021	11,077	1,155,100	104,800	2,656,800	1,850	3,030	6,563
2022	11,288	1,177,200	106,800	2,707,700	1,880	3,090	6,689
2023	11,503	1,199,600	108,800	2,759,200	1,920	3,150	6,816
2024	11,704	1,220,500	110,700	2,807,200	1,950	3,200	6,935
2025	11,909	1,241,900	112,600	2,856,500	1,980	3,260	7,056
2026	12,119	1,263,800	114,600	2,906,800	2,020	3,310	7,181
2027	12,332	1,286,000	116,600	2,957,900	2,050	3,370	7,307
2028	12,551	1,308,800	118,700	3,010,300	2,090	3,430	7,436
2029	12,750	1,329,600	120,600	3,058,200	2,120	3,480	7,555
2030	12,952	1,350,600	122,500	3,106,500	2,160	3,530	7,674

TABLE 2-14 – (continued)

Projected Production Requirements

Year	RSA Population(1)	Average Day Demand (gpd)(2)	DSL and Unbilled Metered Consumption Volume (gpd)(3)	Maximum Day Production (gal)(4)	Maximum Day Production (gpm)(4)	Peak Hour Production (gpm)(5)	Total ERUs(6)
2031	13,158	1,372,200	124,500	3,156,200	2,190	3,590	7,797
2032	13,369	1,394,200	126,400	3,206,800	2,230	3,640	7,922
2033	13,584	1,416,600	128,500	3,258,300	2,260	3,700	8,049
2034	13,802	1,439,400	130,500	3,310,700	2,300	3,760	8,178

(1) From Table 2-13.
(2) Based on population and 104 gpcd.
(3) Based on combination of 3 year rolling average of 7.7 percent from Table 2-9 and 1.4% average of unbilled metered consumption.
(4) Based on ADD:MDD factor of 2.3.
(5) Based on DOH PHD formula.
(6) Based on 7-year average ERU value of 176 gpd/ERU including DSL & unbilled metered consumption.

Projected ERUs per Zone

The expected growth in ERUs presented in Table 2-15 is distributed between three zones. The East High and Middle Zones are combined since the same source facilities supply both zones. The 340 Zone and Low Zone and the West High and Stendahl Zones are each combined since the same source facilities supply each of the zones. The 2014 distribution of ERUs is based on production records for each zone. Since the booster stations are not used, except for annual testing, the zones primarily act independently so source production is a reliable predictor of the consumption in each zone. Although PRVs may transfer water from the higher zones to the low zone, this volume of water is not expected to be significant. The majority of the development occurring in the City is in the West High, East High, and Middle Zones. For years beyond 2014, approximately 50 percent of the new ERUs are going to the West High Zone, 30 percent to the East High and Middle Zone, and 20 percent to the Low Zone. Based on current zoning, the City is not expected to hit buildout by the end of the 20-year planning period.

TABLE 2-15

Projected ERUs per Zone

Year	West High Zone ERUs	Low Zone ERUs	East High and Middle Zones ERUs	Total ERUs
2014	862	2,622	2,208	5,692
2015	920	2,645	2,247	5,812
2016	978	2,668	2,288	5,934
2017	1,039	2,692	2,329	6,060
2018	1,101	2,716	2,372	6,189
2019	1,165	2,742	2,416	6,322
2020	1,222	2,764	2,455	6,441
2021	1,280	2,787	2,495	6,563
2022	1,341	2,811	2,537	6,689
2023	1,402	2,835	2,579	6,816
2024	1,459	2,858	2,618	6,935
2025	1,517	2,881	2,658	7,056
2026	1,577	2,905	2,699	7,181
2027	1,637	2,929	2,741	7,307
2028	1,700	2,953	2,784	7,436
2029	1,756	2,976	2,823	7,555
2030	1,814	2,998	2,862	7,674
2031	1,872	3,022	2,902	7,797
2032	1,932	3,046	2,944	7,922
2033	1,994	3,070	2,986	8,049
2034	2,056	3,094	3,028	8,178

Projected Maximum Day Demand

The projected MDD for each zone is based on the ERUs in Table 2-15, the ERU value of 176 gpd/ERU, and the 7 year ADD:MDD factor of 2.3. These maximum day demands will be compared with source pumping capacity for each zone in Chapter 3.

TABLE 2-16

Projected MDD per Zone

Year	West High Zone MDD, gpd	Low Zone MDD, gpd	East High and Middle Zones MDD, gpd	Total MDD, gpd
2014	349,000	1,061,400	893,800	2,304,200
2015	372,300	1,070,600	909,800	2,352,700
2016	396,100	1,080,000	926,100	2,402,200
2017	420,500	1,089,700	942,900	2,453,000
2018	445,600	1,099,600	960,200	2,505,500
2019	471,500	1,109,800	978,000	2,559,300
2020	494,600	1,119,000	993,800	2,607,400
2021	518,300	1,128,400	1,010,100	2,656,800
2022	542,700	1,138,000	1,026,900	2,707,700
2023	567,400	1,147,800	1,043,900	2,759,200
2024	590,500	1,157,000	1,059,800	2,807,200
2025	614,100	1,166,300	1,076,000	2,856,500
2026	638,300	1,175,900	1,092,700	2,906,800
2027	662,800	1,185,600	1,109,500	2,957,900
2028	688,000	1,195,500	1,126,800	3,010,300
2029	710,900	1,204,600	1,142,600	3,058,200
2030	734,100	1,213,800	1,158,500	3,106,500
2031	758,000	1,223,300	1,174,900	3,156,200
2032	782,300	1,232,900	1,191,600	3,206,800
2033	807,000	1,242,700	1,208,600	3,258,300
2034	832,200	1,252,600	1,225,900	3,310,700

CHAPTER 3

SYSTEM ANALYSIS

INTRODUCTION

Water system planning includes a careful analysis of a water utility's ability to meet minimum level of service standards for existing and future customers. In this chapter, design standards are presented that identify criteria that are applicable to the City's water system. A facility analysis then compares existing system facilities to these design standards. Based on this comparison, water system deficiencies are identified. Project costs and a prioritization of recommended improvements are presented in a later chapter, Capital Improvement Program.

SYSTEM DESIGN AND CONSTRUCTION STANDARDS

The City has adopted system design and construction standards. These standards are summarized in the following sections.

DESIGN AND CONSTRUCTION STANDARDS

Design and construction standards and specifications set forth the actual materials and construction standards that contractors, developers, and the City must follow when constructing water system facility improvements. Design and construction standards and specifications for the City are included in Appendix D. The City updated its design and construction standards in 2008.

GENERAL FACILITY STANDARDS

Performance and design criteria typically address the sizing and reliability requirements for source, storage, distribution, and fire flow. WAC 246-290 contains general criteria and standards that must be followed in development of public water systems. In addition, Washington State Department of Health (DOH) has published its 2009 *Water System Design Manual* that provides more specific guidance for water system design.

Average and Maximum Day Demands

Average Day Demand (ADD) is determined from metered production data of all City sources. Maximum Day Demand (MDD) equals the ADD times a peaking factor of 2.3 as identified in Chapter 2.

Peak Hour Demand

Peak Hour Demand (PHD) is determined using a formula in the *Water System Design Manual*. The formula uses MDD and coefficients appropriate for a water system of Poulsbo's size to determine PHD as identified in Chapter 2.

Minimum System Pressure

The system should be designed to maintain a minimum of 30 psi in the distribution system under peak hour demand and 20 psi under fire flow conditions during maximum day demands.

Minimum Pipe Size

The diameter of transmission mains shall be determined by hydraulic analysis. Minimum water main sizes are as follows:

- 8-inch minimum when serving fire hydrants
- 6-inch minimum may be used in localized conditions where fire hydrants are served by looped water mains, subject to City approval
- 4-inch minimum shall be used beyond hydrants to serve water to end of cul-de-sac when no future extension is required

Fire Flow Standard

The City has adopted 2012 International Fire Code as the minimum fire flow standard. Fire flows must be provided while maintaining 20 psi at all service connections with operational, equalizing, and fire suppression storage volumes depleted. The actual fire flow for an individual structure depends on several factors including size, material, and occupancy.

Valve and Hydrant Spacing

Sufficient valving should be placed to keep a minimum of customers out of service when water is turned off for maintenance or repair. The maximum distance between valves is 500 feet. Valves shall be placed at both ends of easements. Fire hydrants on lateral should be provided with their own auxiliary gate valve. Fire hydrants shall be located not more than 500 feet apart in single-family residential areas.

Source Capacity and Reliability

It is recommended that the total source capacity be sufficient to meet:

- MDD with 18 hours of pumping,
- MDD and replenish fire suppression storage in 72 hours, and

- ADD with largest source out of service.

Storage Volumes

The total storage volume must be greater than the sum of:

- Dead Storage (DS) – volume of stored water not available to all customers at the minimum design pressure
- Operational Storage (OS) – volume sufficient to prevent excessive pump cycling
- Equalizing Storage (ES) – volume sufficient to meet periodic peak demands based on the formula ES = (PHD – Q_S) * 150, where PHD equals the peak hour demand and Q_S equals the total source capacity
- Standby Storage (SB) – volume sufficient to provide twice the average day demand minus source production capacity with the largest source out of service
- Fire Suppression Storage (FSS) – volume equal to the maximum adopted fire flow rate times the fire flow duration

System Reliability

The City has adopted the following system reliability standards:

- All water mains will be looped where feasible.
- Water main velocities should not exceed 10 feet per second maximum day demand with fire flows.
- Storage facilities will have high and low level alarms.
- Standby power provisions will be available at all major pumping facilities.

WATER QUALITY STANDARDS

A summary of the existing and proposed drinking water quality standards applicable to the City is presented in Chapter 5, Water Quality. Any water quality deficiencies are summarized at the end of that chapter.

SYSTEM FACILITY ANALYSIS

WATER RIGHTS ANALYSIS

The City's water rights are summarized in Table 1-1 and well pumping capacity is summarized in Table 1-2. Comparing each well's capacity to its water right reveals that no instantaneous water right limitations are being exceeded.

The annual production for the years 2007 to 2013 is compared to the allowed annual water right withdrawal in Table 3-1. Annual production has been less than the City's total annual water right allotment of 1,893 acre-feet per year. Even though the City experienced growth over the last 7 years, the annual withdrawal has consistently decreased.

TABLE 3-1

Historical Annual Withdrawal Water Rights Analysis

Year	Annual Well Production(1) (gpd)	Annual Well Production(1) (acre-ft/yr)	Existing Water Rights (acre-ft/yr)	Surplus/ (Deficit) (acre-ft/yr)	Percent of Total Water Right
2007	903,904	1,013	1,893	880	53%
2008	918,150	1,031	1,893	862	54%
2009	964,200	1,080	1,893	813	57%
2010	878,644	984	1,893	909	52%
2011	861,219	965	1,893	928	51%
2012	858,943	965	1,893	928	51%
2013	869,208	974	1,893	919	51%

(1) Annual well production does not include water purchased from Kitsap County PUD.

Table 3-2 compares the projected average day demand with existing annual withdrawal water rights. The City has adequate annual withdrawal water rights to meet projected average day demand for the 20-year planning period. Water use efficiency measures and their impacts on water rights are discussed in Chapter 6.

TABLE 3-2

Projected Annual Withdrawal Water Rights Analysis

Year	Maximum Annual Withdrawal Allowed Under Existing Water Rights (acre-ft/yr)	Projected Annual Withdrawal Requirement (gpd)	Projected Annual Withdrawal Requirement (acre-ft/yr)	Water Rights Surplus/(Deficit) (acre-ft.yr)
2014	1,893	1,001,800	1,122	771
2015	1,893	1,022,900	1,146	747
2016	1,893	1,044,400	1,170	723
2017	1,893	1,066,500	1,195	698
2018	1,893	1,089,300	1,220	673
2019	1,893	1,112,700	1,246	647
2020	1,893	1,133,600	1,270	623
2021	1,893	1,155,100	1,294	599
2022	1,893	1,177,200	1,319	574

TABLE 3-2 – (continued)

Projected Annual Withdrawal Water Rights Analysis

Year	Maximum Annual Withdrawal Allowed Under Existing Water Rights (acre-ft/yr)	Projected Annual Withdrawal Requirement		Water Rights Surplus/(Deficit) (acre-ft.yr)
		(gpd)	(acre-ft/yr)	
2023	1,893	1,199,600	1,344	549
2024	1,893	1,220,500	1,367	526
2025	1,893	1,241,900	1,391	502
2026	1,893	1,263,800	1,416	477
2027	1,893	1,286,000	1,441	452
2028	1,893	1,308,800	1,466	427
2029	1,893	1,329,600	1,489	404
2030	1,893	1,350,600	1,513	380
2031	1,893	1,372,200	1,537	356
2032	1,893	1,394,200	1,562	331
2033	1,893	1,416,600	1,587	306
2034	1,893	1,439,400	1,612	281

Table 3-3 compares the projected instantaneous MDD with active instantaneous withdrawal water rights. The City's existing instantaneous water rights are sufficient for supplying 3,118 gpm as shown in Table 1-1 but the Big Valley Springs source (449 gpm) and the Big Valley Shallow Wells (90 gpm) are inactive. The City has adequate instantaneous withdrawal water rights to meet projected maximum day production requirements through 2034.

TABLE 3-3

Instantaneous Withdrawal Water Rights Analysis

Year	Instantaneous Water Right (gpm)	Projected MDD (gpm)	Water Rights Surplus/(Deficit) (gpm)
2014	3,118	1,600	1,518
2015	3,118	1,630	1,488
2016	3,118	1,670	1,448
2017	3,118	1,700	1,418
2018	3,118	1,740	1,378
2019	3,118	1,780	1,338
2020	3,118	1,810	1,308
2021	3,118	1,850	1,268

TABLE 3-3 – (continued)

Instantaneous Withdrawal Water Rights Analysis

Year	Instantaneous Water Right (gpm)	Projected MDD (gpm)	Water Rights Surplus/(Deficit) (gpm)
2022	3,118	1,880	1,238
2023	3,118	1,920	1,198
2024	3,118	1,950	1,168
2025	3,118	1,980	1,138
2026	3,118	2,020	1,098
2027	3,118	2,050	1,068
2028	3,118	2,090	1,028
2029	3,118	2,120	998
2030	3,118	2,160	958
2031	3,118	2,190	928
2032	3,118	2,230	888
2033	3,118	2,260	858
2034	3,118	2,300	818

SOURCE OF SUPPLY ANALYSIS

A description of the City's source of supply was presented in Chapter 1. According to the City's facility standards and DOH recommendation, source production capacity should be sufficient to supply average day demands with the largest source out of service, maximum day demands with 18 hours of pumping, and maximum day demands while replenishing fire suppression storage in 72 hours. These conditions must be met while complying with the maximum instantaneous and maximum annual withdrawal limitations of associated water rights.

The following sections discuss the ability of the City's sources to meet these conditions and also identify the capacity in terms of ERUs for each facility standard. For all analyses, the East High and Middle Zones are combined since the same source facilities supply both zones. The 340 and Low Zone and the West High and Stendahl Zones are each combined since the same source facilities supply each zones.

Maximum Day Demand

DOH recommends that sources be able to pump MDD in 18 hours for reliability purposes but this is not a requirement by law. The source capacity of all wells, excluding emergency sources, when pumped for 18 hours is 2,532,600 gpd and is presented in Table 3-4. As show in Table 2-14, by 2019 MDD is projected to be 2,559,300 gallons. Therefore, during 2019 maximum day demands, the City will need to pump its sources longer than 18 hours to meet demands. Lincoln Well No. 2 is pending approval by DOH

and will become the largest source of supply in the future. This well is considered operational under the Pugh Well water right for this analysis. The Pugh Well is not able to withdraw water at the same time as Lincoln Well No. 2 so it is not used for MDD analysis.

TABLE 3-4

MDD Source Capacity of Active Wells

Well	Capacity(gpm)	18 Hour Capacity (gpd)	24 Hour Capacity (gpd)
Big Valley No. 1	200	216,000	288,000
Big Valley No. 2	520	561,600	748,800
Lincoln No. 1	475	513,000	684,000
Lincoln No. 2(1)	650	702,000	936,000
Pugh Road(1)	Not Used	Not Used	Not Used
Westside	500	540,000	720,000
Total	**2,345**	**2,532,600**	**3,376,800**

(1) Pugh Well cannot run if Lincoln Well No 2 is running at full capacity since they are under the same water right.

Source Production Capacity Analysis

Table 3-5 compares the City's source capacities to the projected maximum day demands. Existing source capacities are provided assuming 18 hours of pumping per day. The Pugh Well is considered out of service for the 18-hour pumping capacity of the East High and Middle Zones. The system's current pumping capacity cannot utilize the full active or inactive water right so additional source capacity will be required to meet the projected maximum day demands. The City has adequate instantaneous water rights to meet projected MDD. A long-term water supply study is planned for 2017 to identify the best approach for increasing the reliability of the system and meeting future demands. This may include additional wells in the Westside and Big Valley Aquifers or increasing the capacity of existing pumps.

TABLE 3-5

Source Capacity Analysis

Year	West High Zone(1)	Low Zone(2)	East High & Middle Zone(3)	Total
Source Capacity, 18 hours pumping (gpd)				
Existing	540,000	777,600	1,215,000	2,532,600
Maximum Day Demand (gpd)				
2014	349,000	1,061,400	893,800	2,304,200
2020	494,600	1,119,000	993,800	2,607,400
2034	832,200	1,252,600	1,225,900	3,310,700
Existing Source Capacity Surplus or Deficit (gpd)				
2014	191,000	(283,800)	321,200	228,400
2020	45,400	(341,400)	221,200	(74,800)
2034	(292,200)	(475,000)	(10,900)	(778,100)

(1) Westside Well is the sole source.
(2) Big Valley Wells No. 1 and No. 2 are the sources.
(3) Lincoln Wells No. 1 and No. 2 and the Pugh Well are the sources.

Existing sources can provide maximum day demands for the system if water is transferred between zones using booster stations and PRVs. An existing source capacity deficit is shown for the Low Zone which indicates that the sources (Big Valley Wells) cannot alone meet the zone's demand in the 18 hours pumping period. In the past, this has been overcome by either using storage capacity to buffer maximum day demands, pumping for more than 18 hours, or transferring supply from the other Zones through pressure reducing valves or booster stations during peak demand periods. An additional 74,800 gpd (70 gpm at 18 hrs/day) is needed system wide by 2020. By 2034, the system's source capacity deficit is 778,100 gpd (720 gpm at 18 hrs/day). Again, there is only a deficit when considering the 18 hour pumping capacity. The sources are able to meet all demands within 24 hours of pumping.

Average Day Demand

The total source capacity of the City's seven wells is 2,345 gpm, as identified in Table 3-4. DOH recommends that the sources be capable of supplying ADD within a 24-hour period with the largest source out of service. Excluding the largest source (Lincoln Well No. 2 – 650 gpm), the source capacity becomes 2,175 gpm or 3,132,000 gpd when pumping for 24 hours. In this scenario the Pugh Well is running to replace the Lincoln Well No. 2. Both wells are points of withdrawal under the same water right so only one is allowed to run at a time and with the Lincoln Well No. 2 out of service the Pugh Well can turn on to replace some of the lost capacity. Comparing this capacity to the average day demand from Table 2-14, the existing source capacity is sufficient for average day demands through the 20-year planning period.

TABLE 3-6

ADD Source Capacity

Well	Capacity(gpm)	24 Hour Capacity (gpd)
Big Valley No. 1	200	288,000
Big Valley No. 2	520	748,800
Lincoln No. 1	475	684,000
Lincoln No. 2(1)	Largest Source Out of Service	Largest Source Out of Service
Pugh	480	691,200
Westside	500	720,000
Total	**2,175**	**3,132,000**

(1) Lincoln Well No. 2 is considered out of service for this analysis.

The source capacity of all active wells, excluding the Pugh Well but including Lincoln Well No. 2, when pumped for 24 hours is 3,376,200 gpd. The ADD production volume can easily be met with or without the largest source in service.

MDD and 72 Hour Fire Suppression Volume

DOH recommends that a water system be able to meet MDD and replenish fire suppression storage (FSS) in each pressure zone within 72 hours. The table below is an analysis of the ability of the sources by zone to meet this requirement. The Low Zone has a deficit currently and for all projected years. The East High and Middle Zones are able to meet this recommendation for all years in the 20-year projection period. The West Zone currently has a surplus, but by 2034 the source will not be able to meet the demands of MDD and FSS. By 2034, more source capacity will need to be installed to meet system wide demand. Fire suppression requirements are discussed later in this chapter.

TABLE 3-7

MDD and Fire Suppression Analysis

West High Zone	2014	2020	2034
Well Capacity (gpm)	500	500	500
MDD (gpm)	-242	-343	-578
FSS/72 Hours (gpm)	-14	-14	0
Surplus/(Deficit) (gpm)	**244**	**143**	**(78)**

TABLE 3-7 – (continued)

MDD and Fire Suppression Analysis

Low Zone	**2014**	**2020**	**2034**
Well Capacity (gpm)	720	720	720
MDD (gpm)	-737	-777	-870
FSS/72 Hours (gpm)	0	0	0
Surplus/(Deficit) (gpm)	**(17)**	**(57)**	**(78)**
East High and Middle Zones	**2014**	**2020**	**2034**
Well Capacity (gpm)	1,125	1,125	1,125
MDD (gpm)	-621	-690	-851
FSS/72 Hours (gpm)	-208	-208	-208
Surplus/(Deficit) (gpm)	**296**	**227**	**65**
All Zones	**2014**	**2020**	**2034**
Well Capacity (gpm)	2,345	2,345	2,345
MDD (gpm)	-1,600	-1,811	-2,299
FSS/72 Hours (gpm)(1)	-208	-208	-208
Surplus/(Deficit) (gpm)	**537**	**326**	**(162)**

(1) FSS for the entire system is the largest FSS value from the East High Zone.

STORAGE ANALYSIS

The storage facility standards are presented in the General Facility standards section of this chapter and are based upon the criteria outlined in Chapter 9 of the DOH Water System Design Manual. The total storage recommended according to this guidance document is based on the sum of the following:

- Dead Storage (DS)
- Operational Storage (OS)
- Equalizing Storage (ES)
- Standby Storage (SB)
- Fire Suppression Storage (FSS)

The amount of available storage to meet these four storage components is equal to the total gross storage of all City reservoirs, standpipes, and elevated tanks minus the amount of "dead" storage in each facility. Dead storage, described in more detail in the following sections, is unusable for supplying operational, equalizing, fire suppression, and standby storage. The gross storage volumes for the City's reservoirs is provided in Table 1-3.

Dead Storage

Dead storage is the volume of stored water not available to all customers at the minimum design pressure in accordance with WAC 246-290-230(5) and (6). Dead storage is excluded from the volumes provided to meet the other storage requirements. WAC 246-290-230(5) and (6) require that a minimum of 30 psi be maintained system wide under peak hour demand conditions (equalization storage depleted) and that 20 psi be maintained system wide under maximum day demand plus fire flow conditions (equalization and fire suppression storage depleted).

The highest water service elevations served by the West High, Low, Middle, and East High Zones are 380 feet, 195 feet, 318 feet, and 406 feet, respectively. As currently configured, the Middle and East High Zones reservoirs do not have any dead storage. The 4th Avenue West High Zone has 434,000 gallons of dead storage, or 44 percent of the total Olhava Standpipe volume. The Low Zone serves a development near the Reservoir; and consequently has 1,639,000 gallons of dead storage. This neighborhood is served by a pump to maintain pressure above 30 psi during normal operation but is not capable of providing fire flow. Since a check valve provides fire flow by gravity, 91 percent of the Low Zone storage is needed to maintain 20 psi at this development during a fire flow event.

Operational Storage

Operational storage is the volume of the reservoir devoted to supplying the water system while under normal operating conditions the source(s) of supply are in "off" status. This volume is dependent upon the sensitivity of the reservoir water level sensors and the tank configuration necessary to prevent excessive cycling of source pump motors. Operational storage is in addition to other storage components, thus providing a factor of safety for equalizing, standby, and fire suppression components. The City's source of supply operational settings create operational storage levels of 10 feet, 4 feet, 2 feet, and 4 feet in the West High, Low, Middle, and East High Zones, respectively.

Equalizing Storage

Equalizing storage is typically used to meet diurnal demands that exceed the average day and maximum day demands. The volume of equalizing storage required depends on peak system demands, the magnitude of diurnal water system demand variations, the source production rate, and the mode of system operation. Sufficient equalizing storage must be provided in combination with available water sources and pumping facilities such that peak system demands can be satisfied. The equalizing storage volume is equal to the peak hour demand based on the formula below. Peak hour demands are provided in Table 2-14 and source capacities are provided in Table 1-2.

$$V_{ES} = (PHD - Q_S)\ (150 \text{ minutes})$$

V_{ES} = Equalizing storage component (gallons)
PHD = Peak hourly demand (gpm)
Q_S = Total source of supply capacity, excluding emergency sources (gpm)

Standby Storage

Standby storage is provided in order to meet demands in the event of a system failure such as a power outage, an interruption of supply, or break in a major transmission line. The amount of emergency storage should be based on the reliability of supply and pumping equipment, standby power sources, and the anticipated length of time the system could be out of service. The standby storage volume is equal to twice the average day demand minus source production capacity with the largest source out of service. The Pugh Well (480 gpm) cannot operate at the same time as Lincoln Well No. 2 since they are under the same water right but can be used if the Lincoln Well is out of service. Total source production capacity is 2,305 gpm. If the largest source (Lincoln Well No. 2 – 650 gpm) is out of service then the Pugh Well can operate and total source capacity equals 2,135 gpm. Average day demands are provided in Table 2-14.

Standby storage is calculated using the following equation:

$$SB_{TMS} = (2 \text{ days})\ (ADD)\ (N) - t_m\ (Q_S - Q_L)$$

SB_{TMS} = Standby storage component for a multiple source system (gallons)
ADD = Average day demand for the system (gpd/ERU)
N = Number of ERUs
t_m = Time the remaining sources are pumped on the day when the largest source is not available (minutes)
Q_S = Sum of all installed and continuously available supply source capacities, excluding emergency sources (gpm)
Q_L = The largest capacity source available to the water system (gpm)

DOH Note: Although standby storage volumes are intended to satisfy the requirements imposed by system customers for unusual situations and are addressed by WAC 246-290-420, it is recommended that a standby storage volume be not less than 200 gallons/ERU.

Fire Suppression Storage

Fire suppression storage is provided to ensure that the volume of water required for fighting fires is available when necessary. The amount of water required for firefighting purposes is specified in terms of rate of flow in gallons per minute (gpm) and an associated duration. Fire suppression storage equals the fire flow rate times the fire flow duration. Table 3-8 lists the highest fire flow requirement for each pressure zone. Fire flow must be provided while maintaining a residual water system pressure of at least 20 pounds per square inch (psi) throughout the water system.

Fire suppression storage is calculated using the following equation:

$$FSS = (FF)(t_m)$$

FSS = Required fire suppression storage component (gallons)
FF = Required fire flow rate, as specified by fire protection authority (gpm)
t_m = Duration of FF rate, as specified by fire protection authority (minutes)

TABLE 3-8

Maximum Fire Flow Requirements

Pressure Zone	West High Zone	Low Zone	Middle Zone	East High Zone
Structure	Olympic College	Central Market	Office Building	North Kitsap High School
Fire Flow (gpm)	3,000	3,500	3,000	3,750
Duration (hours)	4	3	4	4
Fire Suppression Storage Requirement (gal)	720,000	630,000	720,000	900,000

Existing Storage Analysis

Table 3-9 identifies the total available storage and the total required storage for each pressure zone. The Low and West High Zones have a significant amount of dead storage that reduces the volume of storage available for meeting system demands. The total gross storage volume is 4,087,000 gallons, but 2,073,000 gallons (50 percent) is unavailable for use while maintaining system pressures.

This analysis treats the East High and Middle Zones as one “storage area” since excess storage in the East High Zone can be transferred to the Middle Zone through PRVs. Transfer of storage between the zones is discussed within the storage analysis and booster station sections.

In 2011, the City transferred a planning area west of Olympic College to the PUD in exchange for additional storage to serve the West High Zone. At the time the agreement was signed, the PUD’s Vinland System’s had planned improvements capable of meeting the City’s storage needs in 2012 and 2026 as identified in the previous Water System Plan. The 2012 additional storage of 661,000 gallons is included in the existing storage analysis and the 2026 value of 998,000 gallons is included in the 2034 projections.

Table 3-9 provides the existing system storage analysis with year 2014 demands. Currently, the City has adequate storage capacity in all zones.

Consolidating Standby and Fire Suppression Storage (Nesting)

Water systems can exclude the SB or FSS component, whichever is smaller, from a water system's total storage requirement unless such practice is prohibited by: (1) a locally developed and adopted coordinated water system plan; (2) local ordinance; or (3) the local fire protection authority or county fire marshal (see WAC 246-290-235(4)). The City prefers for their system storages to be nested, so this Plan's analysis uses nesting.

Fire suppression storage does not need to be stored independently in all zones; it can be transferred between zones as needed. The Low Zone can receive its fire flow from the West High, Middle, and East High Zones through PRVs so it is not included in the system wide fire analysis.

TABLE 3-9

Existing Storage Analysis

Pressure Zone	West High	Low	East High & Middle	All Zones
Gross Storage	993,000	1,794,000	1,308,000	4,095,000
PUD Storage	661,000	0	0	661,000
Dead Storage	(434,000)	(1,639,000)	0	(2,073,000)
Available Storage	**1,220,000**	**155,000**	**1,308,000**	**2,683,000**
Operational Storage	85,000	188,000	150,000	423,000
Equalizing Storage	0	74,000	0	44,000
Fire Suppression Storage	720,000	0	900,000	1,620,000(1)
Standby Storage	304,000	635,000	442,000	1,381,000
Required Storage(2)	**805,000**	**897,000**	**1,050,000**	**2,087,000**
Storage Surplus/(Deficit)	**415,000**	**(742,000)**	**258,000**	**596,000**

(1) FSS= 720,000 + 900,000 since pump stations do not supply fire flow to West High and Middle Zones.

(2) Smaller value of FSS and SB not included.

There is currently a storage deficit in the Low Zone when considering only Low Zone storage. However, the higher zones can cascade water through PRVs to the Low Zone. The system-wide FSS required is lower than the sum all three individual zone storages since the upper zones can provide FSS to the Low Zone. The equalizing storage and standby storage is also decreased when considering all wells available to the system. This shows that the total system has sufficient volume to supply FSS and Standby Storage. Operational changes will be needed in the Low Zone to reduce the required operational storage to be less than the available storage.

Projected Storage Analysis

Projected system growth in the West High and East High Zones is significant in the 6-year and 20-year planning periods. Table 3-10 identifies the total available storage and the total required storage for each pressure zone in the 6-year and 20-year planning periods, assuming no system modifications. Note that equalizing and standby storage volumes are the only storage requirements that increase with system growth. Dead, operational, and fire suppression storage are guided by elevations, pump settings, and fire codes, respectively which are not projected to change in the planning period.

For the 6-year and 20-year projections, the system is expected to have a storage surplus. The West High Zone's standby storage becomes larger than the fire suppression in 2034 and so it is included as the higher storage quantity. The Low Zone's standby storage and the East and Middle High Zones' fire suppression storage remain the larger requirement throughout the 20-year projection period. The Low Zone is expected to maintain a deficit due to the large amount of dead storage. A fire flow pump can be installed to ensure a pressure of 20 psi is maintained at the high elevations during a fire. This would greatly reduce the dead storage in the Low Zone.

TABLE 3-10

Future Storage Analysis without System Modifications

Pressure Zone	West High Zone (gal)		Low Zone (gal)		East High and Middle Zones (gal)(2)		All Zones	
	2020	**2034**	**2020**	**2034**	**2020**	**2034**	**2020**	**2034**
Existing Gross Storage	993,000	993,000	1,794,000	1,794,000	1,308,000	1,308,000	4,095,000	4,090,000
PUD Storage	661,000	998,000	0	0	0	0	661,000	998,000
Dead Storage	(434,000)	(434,000)	(1,639,000)	(1,639,000)	0	0	(2,073,000)	(2,073,000)
Available Storage	**1,220,000**	**1,557,000**	**155,000**	**155,000**	**1,308,000**	**1,308,000**	**2,683,000**	**3,015,000**
Operational Storage	85,000	85,000	188,000	188,000	150,000	150,000	423,000	423,000
Equalizing Storage	10,000	67,000	84,000	105,000	2,000	40,000	95,000	212,000
Fire Suppression Storage	720,000	720,000	0	0	900,000	900,000	1,620,000(1)	1,620,000(1)
Standby Storage	430,000	724,000	685,000	801,000	491,000	605,680	1,288,000	1,636,000
Required Storage(3)	**815,000**	**876,000**	**957,000**	**1,094,000**	**1,052,000**	**1,090,000**	**2,138,000**	**2,271,000**
Storage Surplus/(Deficit)	405,000	681,000	(802,000)	(939,200)	256,000	218,000	545,000	744,000

(1) FSS= 720,000 + 900,000 since pump stations do not supply fire flow to West High and Middle Zones.
(2) The Lincoln Well No. 2 is considered out of service and the Pugh Well in service when computing standby storage.
(3) Smaller value of FSS and SB not included.

BOOSTER STATION ANALYSIS

Wilderness Park Booster Station

The Wilderness Park Booster Station, while functional, is not frequently used by the City. This booster station can transfer 250 gpm of supply from the Low Zone to the Middle Zone. Under normal conditions, this booster station is not necessary, but could be needed to transfer standby storage from the Low Zone if the Middle and East High Zone are depleted of all usable storage.

Poulsbo Place Booster Station

The Poulsbo Place Booster Station provides domestic service to 30 homes in the 340 Zone and no additional demands to this facility are projected in the next 20 years. Maximum day demand for 30 homes is projected to be 12,000 gpd or 9 gpm and PHD is expected to be 43 gpm. Total capacity is 70 gpm from one pump; the second pump cannot operate simultaneously with the lead pump. This booster station has sufficient capacity to meet the projected MDD. During the summer months, the City receives low pressure complaints from a few customers, although their service pressures remain above 30 psi. Pressures do drop below 30 psi during power outages, although this condition occurs infrequently. Fire flows to this service area are provided from the Low Zone through a single 8-inch check valve by gravity from the Low Zone reservoirs. The booster pump has the capacity to serve approximately 60 ERUs.

WATER SYSTEM DEFICIENCIES

WATER RIGHTS

The City has sufficient instantaneous and annual water rights to meet its current system demands and projected future demands.

SOURCE OF SUPPLY

The City has sufficient source capacity to meet its current system demands. By 2019 the City will need to pump its sources longer than 18 hours per day to meet maximum day demands. While additional pumping is feasible, it places additional stresses on the pumping equipment and aquifers. Therefore, additional source capacity is recommended. Within the 20-year planning period, the City will need an additional 778,100 gpd of source capacity or 720 gpm if pumping for 18 hours.

STORAGE

The City has a storage deficit in the Low Zone due to the large amount of dead storage. The total system has enough storage for MDD or FSS through the 20-year projection

period. The Low Zone will need operational changes to lower the required operational storage.

DISTRIBUTION SYSTEM

The distribution system is analyzed and discussed in Chapter 4.

SYSTEM CAPACITY SUMMARY

Table 3-11 summarizes the source and storage capacity in terms of ERUs and indicates the year in which the capacity is projected to be exceeded. The City has sufficient instantaneous water rights to meet projected MDD beyond 2034 but does not have enough installed capacity to meet projected demands in 2034, if pumping for 18 hours. The City will need to increase the withdrawal capacity of the system to meet the projected maximum day demands.

The West High Zone Storage in Table 3-11 is the gross storage including the 661,000 gallons available from the Vinland Water System. In 2026, the Vinland Water System will provide 998,000 gallons of additional storage to the West High Zone. The West High, Low, Middle, and East High Zones all currently have a storage surplus. Source capacity improvements will be needed to meet MDD in the future.

TABLE 3-11

Source and Storage Capacity Summary

Capacity Parameter	Capacity	ERUs(1)	Year Capacity is Exceeded
Entire System Storage(2)	5,088,000	>8,500	Beyond 2034
Source Capacity – 18 Hours Pumping	2,532,600	6,320	2019
Source Capacity – 24 Hours Pumping	3,376,800	>8,250	Beyond 2034
Water Rights - Annual	1,893 (acre-ft/yr)	9,600	Beyond 2034
Water Rights - Instantaneous	3,118 gpm	25,650	Beyond 2034

(1) ERU Capacity assumes the production ERU value remains 176 gpd/ERU.
(2) Total storage is after 2026 when the PUD is providing 998,000 for the West High Zone.

CHAPTER 4

HYDRAULIC MODELING

INTRODUCTION

This chapter presents information on the computer hydraulic model of the City's water system and the results of hydraulic analyses. The hydraulic analysis was completed to evaluate the existing and future capabilities of the water system.

The operation of a municipal water system involves dynamic interactions between various water system components, including source, storage, transmission, and distribution system facilities. These interactions and their effect on the level of service provided to the City's customers are dependent on the distribution and magnitude of water demands within the system and the performance characteristics of the water system facilities. In addition, infrequent high water demand events, such as fire fighting and other emergencies, can significantly alter the normal flow patterns and pressures in the municipal water system and its components. These factors must be considered in analyzing the ability of a water system to provide for future demands, while maintaining an adequate level of water service to customers.

The development of a computer hydraulic model, which can accurately and realistically simulate the response of a water system under a variety of conditions and scenarios, has become an increasingly important element in the planning, design, and analysis of municipal water systems. The Washington State Department of Health's WAC 246-290 requires hydraulic modeling as a component of water system comprehensive plans.

HYDRAULIC MODELING SOFTWARE

The City's system is analyzed using Innovyze's H_2ONet hydraulic modeling software, which operates in an AutoCAD computer-aided design and drafting environment. The H_2ONet model is configured with a graphical user interface. Each model element, including pipes, valves, pumps, and reservoirs, is assigned a unique graphical representation within the program. Each element is also assigned a number of attributes specific to its function. Element attributes include spatial coordinates, elevation, water demand, pipe length, diameter, and pipe status (open/closed), as well as pump and reservoir characteristics. Model input is accomplished through the creation and manipulation of these objects and their attributes. The H_2ONet software produces the model output in the form of flows and pressures throughout the simulated water system.

MODEL LAYOUT AND CONSTRUCTION

The City's hydraulic model was created from a review of existing system basemaps, construction drawings, planning documents, and topographic maps. Meetings with City staff regarding the operation of system components has also been a crucial element in developing an accurate model.

SOURCE

The five wells are included in the hydraulic model. Each well consists of a fixed-head reservoir simulating the aquifer and a pump. Pump curves are known for all but the Pugh and Lincoln No. 2 Wells and are recreated in the model. Well pumps are called on and off based on reservoir levels in the pressure zones to which they pump.

STORAGE

In H_2ONet reservoirs are modeled as "tanks" with finite size, using actual reservoir dimensions and elevations. The model includes the City's nine active storage tanks. Dimensions and critical elevations of the storage facilities are provided in Table 1-4.

PRESSURE REDUCING VALVES

All distribution system pressure reducing valves (PRVs) are included in the model. Exact settings are unknown and conservatively estimated for purposes of evaluating distribution system capacity. The Mesford PRV has controls to operate based on the level in the Raab Park Reservoir.

SYSTEM DEMANDS

A key element in the hydraulic modeling process is the distribution of demands throughout the water system. Total demand on the system is based on the existing and projected demands from Chapter 2.

The modeling software allows numerous hydraulic scenarios to be loaded into the model. In order to evaluate the system under different demand conditions, several demand scenarios are included in the model. The model evaluated ADD, MDD and PHD scenarios for 2014, 2020, and 2034.

MODEL CALIBRATION

The calibration of a hydraulic model provides a measure of assurance that the model is an accurate and realistic representation of the actual system. For the City's hydraulic model, field measurements from September 20, 2006 are used for the calibration process. During these tests, static and residual pressures were recorded as City staff opened

hydrants and recorded the flow rate. In April 2014, the City also measured the pressures at several hydrants and the up and downstream pressures at all PRVs throughout the system. Field results have been used to calibrate the hydraulic model through the verification and adjustment of pipe type, sizes, roughness coefficients, and elevations. Table 4-1 identifies the location of each test.

TABLE 4-1

Testing Locations

Test Number	Location	Pressure Zone
1	NE Mt. Kamela Court and Sunrise Ridge Avenue NE	East High Zone
2	NE Mesford Street and Meggery Circle NE	East High Zone
3	12th Avenue NE and Garnet Court NE	Middle Zone
4	11th Avenue NE and NE Sol Vei Street	Middle Zone
5	South 9th Avenue and Fjord Drive NE	Low Zone
6	Olhava area	West High Zone
7	Cinema on Viking Way	Low Zone

System conditions during each hydrant test were recorded, including reservoir levels, source on/off status, and booster station on/off status. Table 4-2 summarizes the reservoir and source conditions during testing. Using the system conditions for each hydrant test, the hydraulic model has been used to generate static pressure and residual pressure at the measured flow rate. The domestic demands used during the calibration process are assumed to equal the average day demand for 2006. Model output has been generated at points in the model equivalent to the locations of the hydrant tests.

TABLE 4-2

Conditions During Hydrant Testing

Test No.	Zone	HGL (ft)	Active Supply to Zone
1	East High	511	None
2	East High	511	None
3	Middle	394	Mesford PRV
4	Middle	394	Mesford PRV
5	Low	238	Big Valley Wells
6	West High	488	None
7	Low	238	Big Valley Wells

Static pressure results are generated by running the model with only domestic demands. Residual pressure results are generated by placing an additional demand at the location of the hydrant test equal to the measured flow rate.

The system pressure and pipe flow rates determined in the calibration process are highly dependant on the friction loss characteristics established for each pipe. The friction losses occurring in lengths of pipe, fittings, and isolation valves are accounted for in the hydraulic model. The friction factors for the model pipes are adjusted throughout the calibration process until the model output best approximates the measured values. Hazen-Williams C-factors between 110 and 135 are used throughout the system. These friction factors are typical for most pipe types and are generally conservative. The friction factors for the pipe also compensates for system losses through valves and pipe fittings.

The model output has been produced for two data comparisons: static pressure and residual pressure. Table 4-3 provides the flow rates, measured static and residual pressures, and modeled static and residual pressures. Calibration of the hydraulic model produced results that are within 2 psi of static pressure and 5 psi of residual pressure. Hydraulic models are required to be within 5 psi of measured pressure readings for long-range planning, according to the DOH Water System Design Manual, Table 8-1.

TABLE 4-3

Model Calibration Results

No.	Flow (gpm)	Static Pressure (psi)			Residual Pressure (psi)		
		Field	Model	Difference(1)	Field	Model	Difference(1)
1	1,030	52	51	-1	40	40	0
2	1,130	65	66	1	53	58	5
3	1,160	57	58	1	52	51	-1
4	1,240	90	91	1	66	70	4
5	1,130	95	96	1	72	70	-2
6	1,550	91	89	-2	89	87	-2
7	1,130	67	68	1	54	58	4

(1) Difference is the field measurement subtracted from the model result.

MODELED SCENARIOS AND RESULTS

PEAK HOUR ANALYSIS

Water system must maintain a minimum pressure of 30 psi in the distribution system under peak hour demand conditions in accordance with WAC 246-290-230(5). During peak hour analyses, all operational and equalizing storage is depleted from the City's

reservoirs. Reservoir storage volumes are provided in Table 3-10. Table 4-4 provides the system conditions used during peak hour analyses.

TABLE 4-4

System Conditions During Peak Hour Analyses

Condition	2014	2020	2034
Model Demand Set Name	2014 PHD	2020 PHD	2034 PHD
Peak Hour Demands	2,640 gpm	2,980 gpm	3,760 gpm
Existing System without Modifications			
Model Tank Set Name	2014 Peak Hour	2020 Peak Hour	2034 Peak Hour
Source Conditions	All pumps off	All pumps off	All pumps off
Booster Station Status	All pumps off	All pumps off	All pumps off
West High Zone Reservoirs	482.0 ft HGL	480.8 ft HGL	474.1 ft HGL
Low Zone Reservoirs	238.8 ft HGL	238.6ft HGL	238.1ft HGL
Middle Zone Reservoirs	394.0 ft HGL	393.9 ft HGL	392.3 ft HGL
East High Zone Reservoirs	510.0 ft HGL	510.0 ft HGL	509.5 ft HGL

(1) All pumps off except 340 Zone Pump.

The hydraulic model is used to evaluate the system's ability to provide adequate service pressure. Peak hour analyses reveal two areas of low system pressures. The Low Zone serves an area off 4th Avenue called the 4th Avenue Townhomes. Elevations in this area cause service pressures to drop below 30 psi when the Low Zone reservoirs are depleted of operational and equalizing storage. The closed 340 Zone can be extended to include this property and raise the water pressure. The Low Zone also serves an area near the Finn Hill reservoirs that drops below 30 psi during peak hour demands in the 20-year projection. This area on Terasse Drive can be switched to the Stendahl sub zone which would eliminate the low pressure in the 20-year projection period. The City has already tested the valves required to make the switch and after they provide notification letters to the property owners in November 2014, they plan on transferring this neighborhood to the Stendahl sub zone. Table 4-5 provides the minimum system pressure during peak hour analyses for each pressure zone. Figure 4-1 identifies the existing peak hour pressures throughout the water system. Complete model output results are included in Appendix E.

TABLE 4-5

Minimum Pressures During Peak Hour Analyses

Pressure Zone	Location	2014	2020	2034
West High Zone	Entrance to Olympic College	47.1	46.0	42.8
Low Zone	Viking Crest Condominiums	23.1	23.0	22.9
Middle Zone	Bue Rund Loop NE	34.8	34.7	34.0
East High Zone	Pugh Road and Winesap Court	44.3	44.3	44.0

AVAILABLE FIRE FLOW ANALYSIS

The hydraulic model has been used to assess the availability of fire flows throughout the water system. WAC 246-290-230 (6) requires system providing fire flow to be designed to provide maximum day demands plus the required fire flow, while maintaining system-wide pressure of 20 psi. In addition, operational, equalizing, and fire suppression storage are depleted from the reservoirs for these analyses. The Low Zone can access equalizing and fire suppression storage from upper zones so only the operation storage is depleted. In 2026, the PUD will provide a larger fire suppression storage volume through an intertie in the West High Zone. This increases the storage available in Olhava after 2026 which is why the HGL increases from 2020 to 2034. Storage volumes are provided in Table 3-10. The City's distribution system has been modeled with the fire flow conditions provided in Table 4-6.

TABLE 4-6

System Conditions During Fire Flow Analyses

Condition	2014	2020	2034
Model Demand Set Name	2014 MDD	2020 MDD	2034 MDD
Maximum Day Demands	1,600 gpm	1,810 gpm	2,300 gpm
Existing System without Modifications			
Model Tank Set Name	2014 Fire Flow	2020 Fire Flow	2034 Fire Flow
Source Conditions	All pumps off	All pumps off	All pumps off
Booster Station Status	All pumps off	All pumps off	All pumps off
West High Zone Reservoirs	475.0 ft HGL	473.9 ft HGL	474.1 ft HGL(1)
Low Zone Reservoirs	238.8 ft HGL	238.6 ft HGL	238.1 ft HGL
Middle Zone Reservoirs	383.2 ft HGL	383.2 ft HGL	381.6 ft HGL
East High Zone Reservoirs	485.0 ft HGL	485.0 ft HGL	484.5 ft HGL

(1) In 2026, the PUD will provide a larger fire suppression storage volume. This increases the storage available in Olhava after 2026 which increases the HGL.

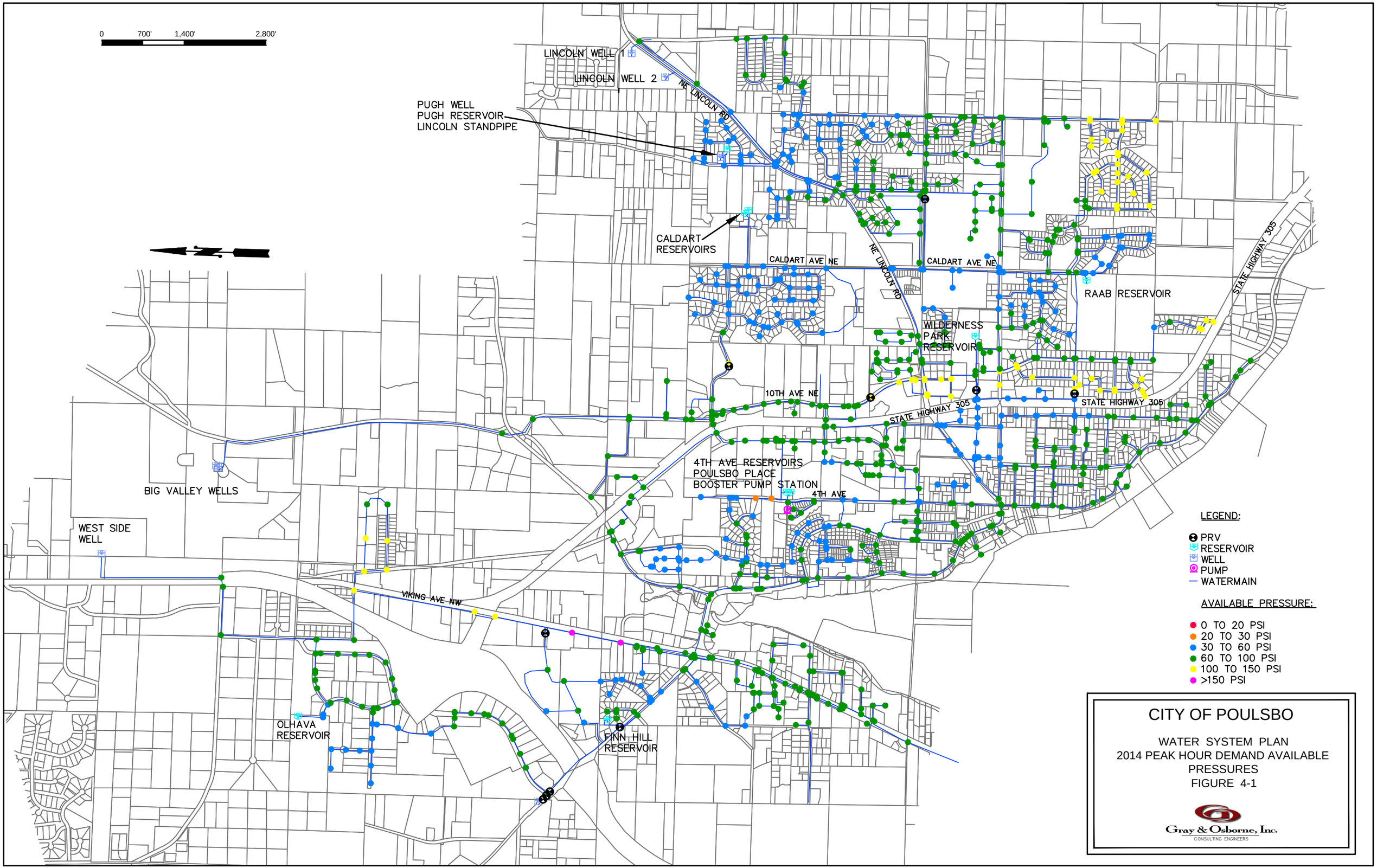
0 700' 1,400' 2,800'
LINCOLN WELL 1
LINCOLN WELL 2
NE LINCOLN RD
PUGH WELL
PUGH RESERVOIR
LINCOLN STANDPIPE
CALDART RESERVOIRS
CALDART AVE NE
NE LINCOLN RD
CALDART AVE NE
RAAB RESERVOIR
STATE HIGHWAY 305
WILDERNESS PARK RESERVOIR
10TH AVE NE
STATE HIGHWAY 305
STATE HIGHWAY 305
4TH AVE RESERVOIRS
POULSBO PLACE
BOOSTER PUMP STATION
4TH AVE
BIG VALLEY WELLS
WEST SIDE WELL
VIKING AVE NW
OLHAVA RESERVOIR
FINN HILL RESERVOIR
LEGEND:
PRV
RESERVOIR
WELL
PUMP
WATERMAIN
AVAILABLE PRESSURE:
0 TO 20 PSI
20 TO 30 PSI
30 TO 60 PSI
60 TO 100 PSI
100 TO 150 PSI
>150 PSI
CITY OF POULSBO
WATER SYSTEM PLAN
2014 PEAK HOUR DEMAND AVAILABLE PRESSURES
FIGURE 4-1
Gray & Osborne, Inc.
CONSULTING ENGINEERS

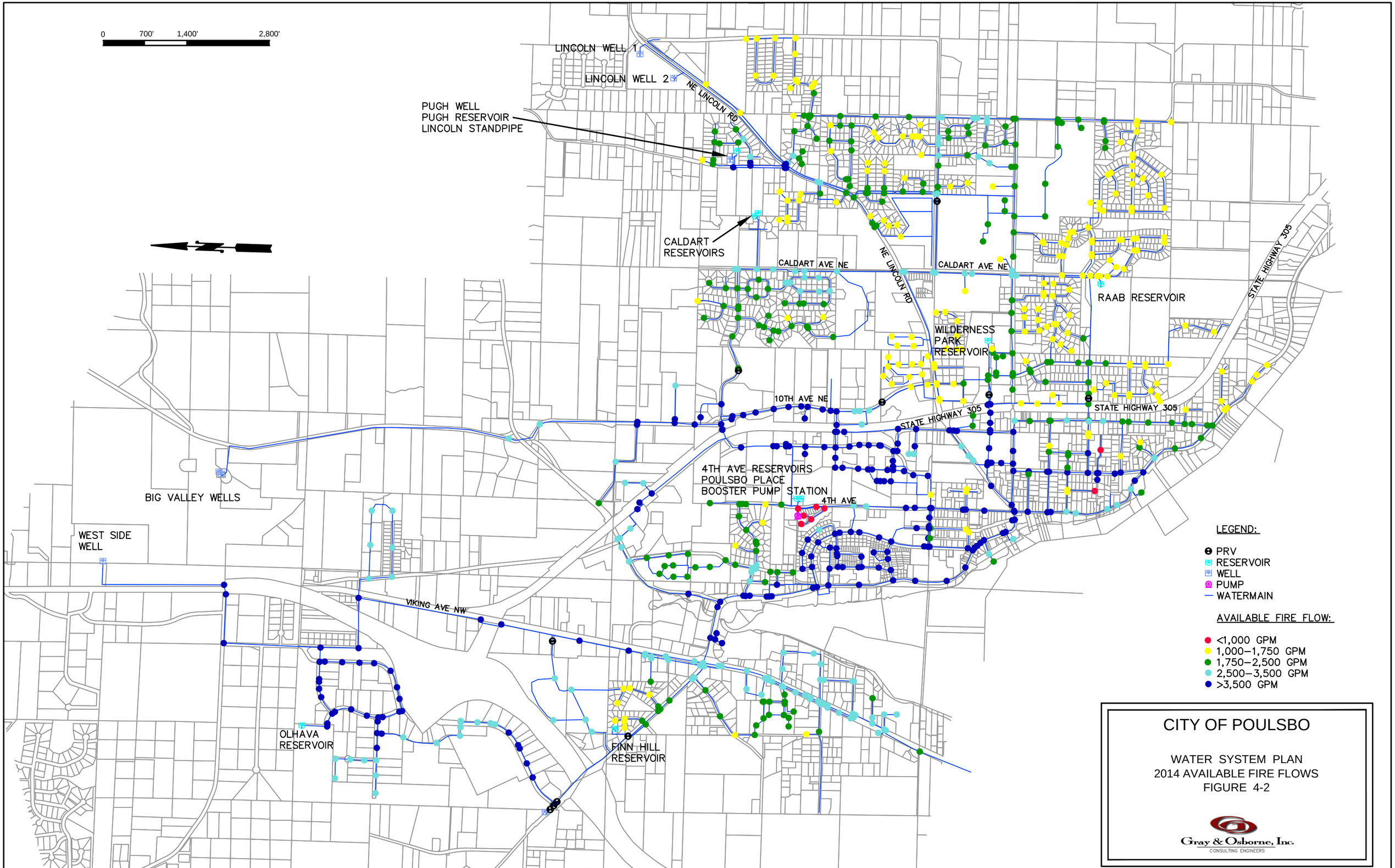
0
700'
1,400'
2,800'
LINCOLN WELL 1
LINCOLN WELL 2
NE LINCOLN RD
PUGH WELL
PUGH RESERVOIR
LINCOLN STANDPIPE
CALDART RESERVOIRS
CALDART AVE NE
NE LINCOLN RD
CALDART AVE NE
RAAB RESERVOIR
STATE HIGHWAY 305
WILDERNESS PARK RESERVOIR
10TH AVE NE
STATE HIGHWAY 305
STATE HIGHWAY 305
4TH AVE RESERVOIRS
POULSBO PLACE
BOOSTER PUMP STATION
4TH AVE
BIG VALLEY WELLS
WEST SIDE WELL
VIKING AVE NW
OLHAVA RESERVOIR
FINN HILL RESERVOIR
LEGEND:
PRV
RESERVOIR
WELL
PUMP
WATERMAIN
AVAILABLE FIRE FLOW:
<1,000 GPM
1,000–1,750 GPM
1,750–2,500 GPM
2,500–3,500 GPM
>3,500 GPM
CITY OF POULSBO
WATER SYSTEM PLAN
2014 AVAILABLE FIRE FLOWS
FIGURE 4-2
Gray & Osborne, Inc.
CONSULTING ENGINEERS

Table 4-7 identifies the existing fire flow by zoning classification and pressure zone. Figure 4-2 identifies the existing available fire flows throughout the water system. Flows vary significantly within each classification depending on the elevation, water main sizes, and proximity to storage. Flow deficiencies in residential zones are either due to the proximity to the reservoir or undersized piping. Flow deficiencies where the requirement is 2,500 gpm or greater are either not available due to undersized transmission piping, low pressures elsewhere in the distribution system that are limiting, or in some areas by the local distribution piping size.

TABLE 4-7

Existing Fire Flow Results by Zoning Classification and Pressure Zone, Limited by 20 psi

Land Use	Fire Flow Availability (gpm)			
	West High Zone	Low Zone	Middle Zone	East High Zone
Residential – Low and Medium Density	1,657 – 6,648	477 – 5,660	1,060 – 3,297	1,061 – 6,320
Residential – High Density	NA	1,890 – 2,605	1,814	2,479 – 2,569
Commercial, Business Park, Light Industrial, and School	3,319 – 7,020	3,076 – 5,689	1,673 – 1,828	N/A

Table 4-8 provides the locations of the fire flow deficiencies along with their required fire flow, current fire flow, CIP project to address the deficiency, and the resulting flow improvement.

TABLE 4-8

2014 Deficiencies

Nodes	Location	Fire Flow Required (gpm)	2014 Available Flow (gpm)	2034 Available Flow with CIPs	CIP Project(s)
Many	Liberty Ridge Apartments	2,500	2,026 – 2,352	2,860 – 3,092	D-6
Many	NE Arbutus Court and 4th Avenue NE Houses	1,000	477 – 606	(1)	BS-2
J2234	Nelson Place NE and NE Sommerseth Street	1,000	687	1,545	D-2
J2219	East of 6th Avenue NE on NE Sommerseth Street	1,000	755	2,748	D-2

(1) Flow availability will depend on the capacity of the fire flow pump installed.

The Low Zone is the only zone with deficient fire flow. The Liberty Ridge Apartment complex does not have a sprinkler system, and flow is limited by some undersized piping, and high elevations. There is a pressure limiting node on 4th Avenue that limits flow to the nearby houses on NE Arbutus Court Old Town has several locations with undersided piping that limits fire flow. All of these deficiencies are addressed in CIP projects listed in Table 4-8 and described in Chapter 9.

CHAPTER 5

WATER QUALITY

INTRODUCTION

Group A public community water systems must comply with the drinking water standards of the federal Safe Drinking Water Act and its amendments. The Washington State Department of Health (DOH) adopted the federal standards under WAC 246-290, which became effective April 27, 2003, and was last updated March 30, 2012. This chapter describes the water quality parameters necessary to ensure the delivery of safe potable drinking water to the City's customers. This chapter also evaluates the City's efforts to comply with required regulations and testing requirements.

The quality of the source water for its drinking water system is of primary concern to the City. The City has historically provided a high quality of drinking water to its service area and currently complies with all water quality monitoring requirements. The City's water quality monitoring program meets the sampling frequency prescribed by DOH regulations. The City publishes a consumer confidence report titled the *Annual Drinking Water Quality Report* in an effort to keep consumers informed as to the quality of both their water supply and water delivery systems.

The following water quality issues are discussed in this chapter:

- Description of both current and future drinking water quality regulations, as they apply to the City's water system.
- Evaluation of the City's drinking water quality.
- Schedule for future water quality monitoring.

BACKGROUND

The Safe Drinking Water Act (SDWA) of 1974, amended in 1986 and 1996, established specific roles for the federal government, state government, and water system purveyors with respect to water quality monitoring. The U.S. Environmental Protection Agency (EPA) is authorized to develop national drinking water regulations and oversee the implementation of the SDWA. State governments are expected to adopt the federal regulations and accept primary responsibility or "primacy" for administration and enforcement of the act. Public water system purveyors are assigned the day-to-day responsibility of meeting regulations by incorporating monitoring, recording, and sampling procedures into their operation and maintenance programs.

WATER QUALITY STANDARDS

Table 5-1 lists drinking water regulations, the affected contaminants, and indicates which regulations require the City to conduct monitoring or take other action. Existing state law contains regulations for bacteriological contaminants, inorganic chemicals and inorganic physical parameters (IOCs), volatile organic chemicals (VOCs), synthetic organic chemicals (SOCs), radionuclides, and total trihalomethanes (TTHMs).

The implementation schedules for the proposed new regulations are subject to revision and the City should continue to stay informed regarding regulatory deadlines.

TABLE 5-1

Drinking Water Regulations(1)

Drinking Water Regulation(1)	Contaminants Affected(2)	City Action
Bacteriological	Coliform	Monitoring
Residual Disinfectant	Total Free Chlorine	Monitoring
Consumer Confidence Report	Reporting Only	Reporting
Inorganic Chemicals and Physical Parameters	IOCs	Monitoring
Arsenic Rule	Arsenic	Monitoring
Volatile and Synthetic Organic Compounds	VOCs, SOCs	Monitoring
Asbestos	Asbestos	Monitoring
Lead and Copper Rule	Lead, Copper	Monitoring
Radionuclide Rule	Radionuclides	Monitoring
Stage 1 and 2 Disinfectants/ Disinfection Byproducts Rule	TTHMs, HAA5, Chlorite, Bromate	Monitoring and Planning
Groundwater Rule	Bacteriological	Planning
Surface Water Treatment Rule	Microbial Contaminants	Not Applicable
Information Collection Rule	Bacteriological	Not Applicable
Filter Backwash Recycling Rule	Bacteriological	Not Applicable
Interim Enhanced Surface Water Treatment Rule	Bacteriological	Not Applicable
Long Term 1 Enhanced Surface Water Treatment Rule	Bacteriological	Not Applicable

(1) Drinking water regulations as of July 2014.
(2) TTHM = Total Trihalomethanes; HAA5 = Five Haloacetic Acids; IOCs = Inorganic Chemical and Physical Characteristics; VOCs = Volatile Organic Chemicals; SOCs = Synthetic Organic Compounds.

EXISTING DRINKING WATER QUALITY STANDARDS

Minimum standards for water quality are specified in terms of maximum contaminant levels (MCLs). Primary MCLs are based on chronic and/or acute human health effects. Secondary MCLs are based on factors other than health effects, including aesthetics. MCLs are specified in WAC 246-290 and described further in the following pages and tables. The following sections discuss the applicable water quality regulations, analysis of the City's compliance with these regulations, and a summary of anticipated future regulations. A water quality monitoring schedule is presented at the end of this chapter.

BACTERIOLOGICAL

Description

Coliform bacteria describe a broad category of organisms routinely monitored in potable water supplies. Though not all coliform bacteria are pathogenic in nature, they are relatively easy to identify in laboratory analysis. If coliform bacteria are detected, then pathogenic organisms may also be present. Bacterial contamination in a water supply can cause a number of waterborne diseases, so these tests are strictly monitored and regulated by the DOH.

The Coliform Monitoring Rule specifies two types of violations, "non-acute MCLs" and "acute MCLs." A purveyor is required to notify both the DOH and system consumers if either MCL violation occurs. Acute violations of bacteriological MCLs are as follows:

- E. coli and/or fecal coliform presence in a repeat sample.
- Coliform presence in a set of repeat samples collected as a follow-up to a routine sample with fecal coliform or E. coli presence.

Non-acute violations of bacteriological MCLs are as follows:

- Systems taking less than 40 routine samples during the month have more than one sample with coliform presence.
- Systems taking 40 or more routine samples during the month have more than 5.0 percent with coliform presence.

Public notification requirements for violations are included in Chapter 7. Sample letters and notifications are included in Appendix F.

The City is required to sample for bacteriological contaminants 15 times each month. A copy of the sampling locations and the repeat sample locations are included as part of the

City's Coliform Monitoring Plan, which is included in Appendix F. The City completes triggered source monitoring per the Groundwater Rule when necessary.

Monitoring Requirements and Analysis

The City monitors for bacteriological contaminants in accordance with its Water Quality Monitoring Plan, which is included in Appendix F. The number of required monthly samples is provided annually from DOH on the Water Quality Monitoring Report. For the year 2006, the City was required to collect 15 routine coliform samples per month, except that June, July, and August require 10 samples. DOH requires fewer samples during the summer months when local schools are not in session.

The City had two non-acute coliform violations from 2007 through December 2013. All follow-up testing revealed a lack of coliform or E. coli bacteria.

RESIDUAL DISINFECTANT

Monitoring Requirements and Analysis

According to WAC 246-290-300, systems providing disinfection treatment shall measure residual disinfectant concentration within the distribution system when taking routine or repeat coliform samples. The City complies with this requirement and records chlorine residuals along with coliform sampling results. The City's chlorination goal is to maintain a detectable residual chlorine concentration within the distribution system. Chlorine residual concentrations are monitored during bacteriological sampling and if no chlorine is detected, City staff flush the local distribution mains.

CONSUMER CONFIDENCE REPORT

Description and Requirements

This new rule was finalized on August 19, 1998. The Consumer Confidence Report Rule requires community water system purveyors to prepare and distribute an annual report of water quality analyses to their customers. The City is required to submit the report to its customers by July 1 each year. The City's report is called the *Water Quality Report*. A copy of the City's 2014 report (year 2013 data) is included in Appendix F.

INORGANIC PHYSICAL AND CHEMICAL CHARACTERISTICS

Description

This category includes several inorganic elements and compounds. Many of the inorganic chemicals include elemental metals such as mercury, arsenic, and iron. Some non-metallic constituents such as chloride, fluoride, and sulfate are also included.

Physical properties that affect water quality in this category include turbidity, specific conductivity, total dissolved solids, and color.

WAC 246-290-310 specifies primary and secondary MCLs for inorganic physical and chemical characteristics. Primary MCLs are based on health effects, and secondary MCLs are based on factors other than health effects, such as aesthetics. Three chemicals, lead, copper, and sodium, do not have primary or secondary MCLs, but are required to be monitored along with other IOCs. Lead and copper are regulated under the Lead and Copper Rule, described in detail later in this chapter. Primary and secondary MCLs for inorganic chemical and physical characteristics are summarized in Tables 5-2 and 5-3, respectively.

TABLE 5-2

Primary Water Quality Standards Inorganic Chemical Characteristics

Chemical	Primary MCL
Antimony (Sb)	0.006 mg/L
Arsenic (As)	0.01 mg/L
Asbestos	7 million fibers/liter (length >10 microns)
Barium (Ba)	2.0 mg/L
Beryllium (Be)	0.004 mg/L
Cadmium (Cd)	0.005 mg/L
Chromium (Cr)	0.1 mg/L
Copper (Cu)	1.3 mg/L (Action Level)
Cyanide (HCN)	0.2 mg/L
Fluoride (F)	4.0 mg/L
Lead (Pb)	0.015 mg/L (Action Level)
Mercury (Hg)	0.002 mg/L
Nickel (Ni)	0.1 mg/L
Nitrate (as N)	10.0 mg/L
Nitrite (as N)	1.0 mg/L
Selenium (Se)	0.05 mg/L
Sodium (Na)	None, 20 mg/L recommended by EPA
Thallium (Tl)	0.002 mg/L

Source: WAC 246-290-310.

TABLE 5-3

Secondary Water Quality Standards Inorganic Chemical and Physical Characteristics

Chemical/Characteristic	Secondary MCL
Chloride (Cl)	250.0 mg/L
Fluoride (F)	2.0 mg/L
Iron (Fe)	0.3 mg/L
Manganese (Mn)	0.05 mg/L
Silver (Ag)	0.1 mg/L
Sulfate (SO4)	250.0 mg/L
Zinc (Zn)	5.0 mg/L
Color	15 Color Units
Hardness	None Established
Specific Conductivity	700 µmhos/cm
Total Dissolved Solids (TDS)	500 mg/L

Source: WAC 246-290-310.

Monitoring Requirements and Analysis

Groundwater sources must be sampled for inorganics once every 3 years, unless a monitoring waiver is granted by DOH. Nitrate samples are required annually and nitrite samples are required once every 3 years. Because nitrates and nitrites are included in IOC sampling, additional individual samples are not required in years when an IOC is taken from the source.

The City has a monitoring waiver for IOCs, except for lead, copper, and nitrates. The City's most recent IOC samples (except lead, copper, and nitrates) were taken in September 2013 for the Westside Well and in 2010 for the Big Valley, Lincoln, and Pugh Wells. Table 5-4 provides results only for parameters that were detected. Sample parameters that were listed as "not detected" or "less than" by the laboratory are omitted from the table.

No samples exceeded the primary EPA standards. The Westside Well exceeded the EPA secondary standards for manganese. The Westside and Pugh Wells exceeded the State MCL for turbidity.

TABLE 5-4

Inorganic Source Water Quality (1)

Parameter	Inorganic Testing Results					
	Trigger	Big Valley Well 1	Big Valley Well 2	Lincoln Well	West Side Well	Pugh Well
EPA Regulated Primary Standards						
Arsenic	MCL = 0.01	0.008	0.005	0.003	0.0072	0.004
EPA Regulated Secondary Standards						
Manganese	MCL = 0.05	0.012	0.013	0.044	0.064	0.055
State Regulated						
Sodium	(2)	5.78	5.76	7.03	14.7	9.57
Hardness	None	78.6	79.1	71.3	70.3	75.3
Conductivity	MCL = 700	173	177	170	182	261
Turbidity	MCL = 1	0.05	1	0.4	1.2	1.3

(1) Those parameters that were not detected in any well are omitted from this table.
(2) EPA has established a recommended limit of 20 mg/L for those consumers that may have diet restrictions related to sodium intake.

ARSENIC

Description

Arsenic is an inorganic chemical that has received significant attention due to proposed rule revisions. Long-term exposure to low concentrations of arsenic in drinking water can lead to skin, bladder, lung, or prostate cancer. Non-cancer effects of ingesting arsenic at low levels include cardiovascular disease, diabetes, and anemia, as well as reproductive, developmental, immunological, and neurological effects.

A new arsenic standard was adopted by the EPA on January 22, 2001, and became effective on February 22, 2002. The new standard MCL of 0.01 mg/L replaced the old standard of 0.05 mg/L. Compliance with the new MCL standard was required for all systems by January 23, 2006.

Monitoring Requirements and Analysis

The Arsenic Rule makes monitoring requirements consistent with monitoring for other IOCs. Groundwater sampling for arsenic is required once every 3 years. Any system that has a sampling point monitoring result exceed the MCL must increase the frequency of monitoring at that sampling point to quarterly sampling. Compliance with the MCL would be based on the running annual average of the samples. Systems triggered into increased monitoring would not be considered in violation of the MCL until they have completed 1 year of quarterly sampling. However, if any sample result will cause the

running annual average to exceed the MCL at any sampling point, the system is out of compliance with the MCL immediately.

IOC sample analyses from 2010 and 2013 for the City's wells indicate an arsenic range of 0.003 to 0.008 mg/L, which are below the new MCL standard of 0.01 mg/L.

VOLATILE ORGANIC COMPOUNDS AND SYNTHETIC ORGANIC COMPOUNDS

Description

Volatile organic chemicals (VOCs) are manufactured, carbon-based chemicals that vaporize quickly at normal temperatures and pressures. VOCs include many hydrocarbons associated with fuels, paint thinners, and solvents. This group does not include organic pesticides, which are regulated separately as synthetic organic chemicals (SOCs). VOCs are divided into the two following groups:

1. Regulated VOCs that have been determined to post a significant risk to human health.

2. Unregulated VOCs for which the level of risk to human health has not been established.

There are currently 21 regulated VOCs and 33 regulated SOCs. Lists of these compounds and their MCLs are included in Tables 5-5 and 5-6.

Monitoring Requirements and Analysis

Per the DOH requirements, SOCs and VOCs must be sampled once every 3 years, unless a waiver is in place. VOC sampling was most recently completed in 2012. No VOCs or SOCs were detected for all samples taken.

TABLE 5-5

Regulated Synthetic Organic Chemicals

Organic Chemical	Primary MCL (mg/L)(1)	Organic Chemical	Primary MCL (mg/L)(1)
Vinyl Chloride	0.002	Chlordane	0.002
Benzene	0.005	Dibromochloro-propane	0.0002
Carbon Tetrachloride	0.005	2,4-D	0.07
1,2-Dichloroethane	0.005	Ethylene dibromide	0.00005
Trichloroethylene	0.005	Heptachlor	0.0004
Para-Dichlorobenzene	0.075	Heptachlor epoxide	0.0002
1,1-dichloroethylene	0.007	Lindane	0.0002
1,1,1-Trichloroethane	0.2	Methoxychlor	0.04
cis-1,2-Dichloroethylene	0.07	Polychlorinated biphenyls (PCBs)	0.0005
1,2-Dichloropropane	0.005	Pentachlorophenol	0.001
Ethylbenzene	0.7	Toxaphene	0.003
Monochlorobenzene	0.1	2,4,5-TP	0.05
Ortho-Dichlorobenzene	0.6	Benzo(a)pyrene	0.0002
Styrene	0.1	Dalapon	0.2
Tetrachloroethylene	0.005	Di(2-ethylhexyl) adipate	0.4
Toluene	1	Di(2-ethylhexyl) phthalate	0.006
Trans-1,2-Dichloroethylene	0.1	Dinoseb	0.007
Xylenes (total)	10	Diquat	0.02
Dichloromethane	0.005	Endothal	0.1
1,2,4-Trichloro-benzene	0.07	Endrin	0.002
1,1,2-Thrichloro-ethane	0.005	Glyphosate	0.7
Arochlor	0.002	Hexachlorobenzene	0.001
Aldicarb	0.003	Hexachlorocyclopentadiene	0.05
Aldicarb sulfone	0.003	Oxamyl (vydate)	0.2
Aldicarb sulfoxide	0.004	Picloram	0.5
Atrazine	0.003	Simazine	0.004
Carbofuran	0.04	2,3,7,8-TCDD (dioxin)	0.00000003

(1)

ASBESTOS

Description

Asbestos is the name for a group of naturally occurring, hydrated silicate minerals with fibrous morphology. Included in this group are chrysotile, corcidolite, amosite, and the fibrous varieties of anthophyllite, tremolit, and actinolite. Most commercially mined asbestos is chrysotile. Asbestos has flexibility, strength, and chemical and heat resistance

properties that have made it adaptable to many uses including building insulation, brake linings, and water pipe.

In recent years, there has been much concern with the health risks associated with asbestos. Several studies and case histories have documented the hazards to internal organs as a result of inhalation of asbestos fibers. Data is limited on the effects of ingestion of asbestos fibers or on the effects of inhalation exposure from drinking water. Ingestion studies have not caused cancer in laboratory animals, although studies of asbestos workers have shown increased rates of gastrointestinal cancer.

Monitoring Requirements and Analysis

Asbestos is listed as a primary inorganic contaminant; however, it is not routinely included in IOC samples for public water systems. Asbestos monitoring is to be conducted every 9 years unless a waiver is applied for and granted by DOH. The City has less than 10 percent asbestos-cement water main and therefore qualifies for an asbestos monitoring waiver.

No asbestos samples have been taken in the past 6 years, as allowed by the City's monitoring waiver. It is anticipated that future samples will not be required for the same reasons.

LEAD AND COPPER

Description

In 1991, the EPA promulgated the Federal Lead and Copper Rule. The State of Washington adopted this rule in 1995, with minimal changes. The Lead and Copper Rule is intended to reduce the tap water concentrations of lead and copper that can occur when corrosive source water causes lead and copper to leach from water meters and other plumbing fixtures. Possible treatment techniques to reduce lead and copper leaching include addition of caustic soda or soda ash to the source water prior to distribution.

Monitoring Requirements and Analysis

Based on the requirements of the EPA Lead and Copper Rule (40 CFR 141), lead and copper monitoring must be completed for two consecutive 6-month monitoring periods. If lead and copper action levels are not exceeded, then the number of samples may be reduced to one-half the original number for three consecutive annual periods. Assuming compliance with the action level is maintained, reduced sampling may continue once every 3 years thereafter.

Ninety percent of the distribution system lead samples collected according to the procedures outlined in WAC 246-290 must have concentrations below the "Action Level" of 0.015 mg/L. Similarly, 90 percent of the copper samples must have

concentrations of less than 1.3 mg/L. Systems exceeding the action levels are required to provide public notification and implement a program for reducing lead and copper levels.

The City last collected lead and copper samples on August 22, 2013. Distribution system samples were taken at 41 locations in 2013. The results of the lead and copper testing conducted 2013 are shown in Table 5-6. As shown, all of the lead and copper sample results indicate concentrations below the action levels.

TABLE 5-6

Lead and Copper Testing Results

Parameter	2013
Lead	
Action Level (mg/L)	0.0150
Maximum Concentration (mg/L)	0.011
90th Percentile Concentration (mg/L)	0.002
Number of Samples Taken	41
Number of Samples Exceeding Action Level	0
Copper	
Action Level (mg/L)	1.3
Maximum Concentration (mg/L)	0.06
90th Percentile Concentration (mg/L)	0.05
Number of Samples Taken	41
Number of Samples Exceeding Action Level	0

RADIONUCLIDES AND RADON

Description

Radionuclides include radioactive substances occurring naturally in subsurface waters. Regulated substances include radium-226, radium-228, uranium, and gross alpha and beta particles. Table 5-7 summarizes radionuclide MCLs as defined by EPA's Radionuclide Rule, WAC 246-290-310(7), and 40 CFR 141.66.

TABLE 5-7

Radionuclide MCLs

Radionuclide	MCL
Combined Radium-226 and -228	5 pCi/L
Uranium	30 µg/L
Gross Alpha (excluding uranium and radon)	15 pCi/L
Gross Beta	4 millirem/year

Monitoring Requirements and Analysis

WAC 246-290-300(10) and 40 CFR 141.26 require radionuclide samples once every 4 years. A gross alpha particle activity measurement may be substituted for the required radium-226 and radium-228 analysis, provided that the measured gross alpha particle activity does not exceed 5 pCi/L at a confidence level of 95 percent.

The City collected radionuclide samples for radium and gross alpha in October 2009 at all well sites. The results of these radium-228 tests were below the MCL of 5 pCi/L. The highest detected level was 1 pCi/L in Big Valley Well 2. Gross alpha levels varied between 2.5 and 4 pCi/L, which are below the proposed MCL of 15 pCi/L.

DISINFECTANTS AND DISINFECTION BYPRODUCTS RULE

Description

WAC 246-290-300(7) requires purveyors of public water systems that provide water treated with chemical disinfectants to monitor for disinfectants and disinfection byproducts. The Disinfection/Disinfectants Byproduct Rule (D/DBP Rule) establishes residual disinfectant concentrations and maximum contaminant levels for disinfection byproducts.

Trihalomethanes (THMs) and five haloacetic acids (HAA5) are a group of organic compounds that can be formed as a result of drinking water disinfection by chlorine and are therefore often referred to as disinfection byproducts. Total trihalomethanes (TTHMs) include the sum of the concentrations of four disinfection byproducts: chloroform, bromoform, bromodichloromethane, and dibromochloromethane.

Monitoring Requirements and Analysis

Stage 1 of the D/DBP Rule was published in November 1998 and became effective in 2000. Under Stage 1 of the D/DBP Rule, the MCLs for TTHM and HAA5 are 80 micrograms per liter (µg/L) and 60 µg/L, respectively, and is based on the running annual average of two annual samples. Systems are required to prepare and implement a

disinfection byproducts monitoring plan. A copy of the City's plan is included in Appendix E. The Stage 1 D/DBP Rule remained in effect for compliance until October 1, 2013.

TTHM and HAA5 samples were taken at three locations in July of 2010, 2011, 2012, and 2013. All test results for HAA5 for all three locations were below the detection limit. Test results for TTHM indicated levels ranging from 0.62 μg/L to 8 μg/L. All test results are well below the respective MCLs.

Stage 2 of the D/DBP Rule was published in January 2006 and compliance with the new regulations began on October 1, 2013. Under Stage 2 of the D/DBP Rule, the MCLs for TTHM and HAA5 remain 80 μg/L and 60 μg/L, respectively; however, compliance with the MCL is based on the running annual average of each individual sample instead of the running annual average of all samples combined. The number of samples taken is dependant on the population served. Systems serving between 500 and 9,999 people must collect two samples per year and systems serving between 10,000 and 99,999 people must collect four samples per quarter. In 2013, the City served 9,628 people but is expected to exceed 10,000 people within the 6-year planning period.

GROUNDWATER RULE

The Groundwater Rule (GWR) became effective November 1, 2010. The goal of the GWR is to set disinfection requirements for groundwater not under the influence of surface water. Under the 1986 SDWA, the U.S. EPA was required to set disinfection requirements for all public water systems. The SWTR did this for surface water and GUI. The GWR contains four regulatory elements:

- Sanitary Surveys
- Hydrologic Sensitivity Assessments
- Source Water Monitoring
- Corrective Action or Disinfection

Each groundwater source will be evaluated by DOH to determine if it should be disinfected. If disinfection is required, the system must provide either: (1) a continuous free chlorine residual of 0.2 mg/L at the entry to the distribution system and detectable free chlorine residual throughout the distribution system; or (2) an alternate treatment strategy that ensures at least 4-logs (99.99 percent) of viral inactivation as determined by DOH.

Poulsbo currently chlorinates all wells and maintains a residual throughout the water distribution system.

WATER QUALITY MONITORING SCHEDULE

Water quality monitoring is required for regulatory compliance and to monitor water system conditions. DOH prepares a Water Quality Monitoring Report each year that is distributed to each water purveyor. This report defines a monitoring schedule and provides sample locations. Table 5-8 provides a monitoring schedule for the City.

TABLE 5-8

City of Poulsbo Water Quality Monitoring Requirements

Parameter	Sample Location	Frequency	Notes	Consequence of Exceeding Standard
Bacteriological	Distribution System	Sample 15 times per month, except June, July, August, sample 10 times per month.	See Coliform Monitoring Plan in Appendix F.	Follow-up and Repeat Sampling
IOCs	Source	One sample every 9 years at each source.	Confirm establishment of monitoring waivers with DOH every 3-year period.	Possible Treatment Modifications
Nitrates	Source	Annually	(1)	Possible Treatment Modifications
VOCs	Source	One sample every 6 years at each source.	Last samples taken in 2012.	Possible Treatment Modifications
SOCs	Source	One sample every 3 years at each source.	Confirm establishment of monitoring waivers with DOH every 3-year period.	Possible Treatment Modifications
Lead and Copper	Distribution System	Once every 3 years or as directed by DOH.	Last samples taken in 2012.	Additional Treatment Modifications
Asbestos	Distribution System	Once every 9 years.	Confirm establishment of monitoring waivers with DOH every 3-year period.	Increased Monitoring
Radionuclides	Source	Once every 6 years.	Last sample taken in 2009.	Possible Treatment Modifications
Disinfection Byproducts	Distribution System	Four samples quarterly.	Compliance determined by running annual average of increased monitoring.	Possible Treatment Modifications

(1) Nitrate analysis is included as a part of inorganic chemical analysis. This test should not be duplicated in years when inorganic chemicals are tested.

CHAPTER 6

WATER USE EFFICIENCY PROGRAM

OBJECTIVE

The objectives of this chapter are to identify the conservation and water use efficiency requirements pertaining to the City, evaluate past conservation efforts, and describe the City's water use efficiency plan for the next 6 years.

WATER USE EFFICIENCY PLANNING REQUIREMENTS

The Washington Legislature passed the Water Use Efficiency Act of 1989 (43.20.230 RCW), which directs DOH to develop procedures and guidelines relating to water use efficiency. In response to this mandate, Ecology, the Washington Water Utilities Council, and DOH jointly published a document titled *Conservation Planning Requirements* (1994). In 2003, the Municipal Water Supply - Efficiency Requirements Act (Municipal Water Law) was passed and amended RCW 90.46 to require additional conservation measures. The Municipal Water Law, among other things, directed DOH to develop the Water Use Efficiency Rule (WUE Rule), which is outlined in the Water Use Efficiency Guidebook and became effective January 22, 2007.These documents provide guidelines and requirements regarding the development and implementation of conservation programs for public water systems. Conservation programs developed in compliance with this document are required by DOH and by Ecology as part of a public water system water right application. Conservation must be evaluated and implemented as an alternate source of supply before state agencies approve applications for new or expanded water rights. The third and most recent edition of the WUE Guidebook was released in January 2011.

The WUE Rule is an extension to the *Conservation Planning Requirements* and sets more stringent requirements for public water purveyors. The WUE Rule is comprised of four sections:

1. Planning requirements.
2. Distribution system leakage standard.
3. Customer goal setting.
4. Annual WUE reporting.

This chapter provides a discussion of the requirements and the impact the WUE Rule has on the City.

PAST CONSERVATION PROGRAMS

In the last Plan, the City set two goals to reduce their total water use. The first goal was to reduce the DSL below 10 percent. The City accomplished this by fixing leaky pipes and accurately metering or estimating uses such as flushing and fire flow. The second goal was to reduce consumer consumption by 10 percent over the 20 year planning period in terms of consumption per ERU. This was accomplished through consumer education and promoting water saving fixtures and appliances.

EFFECTS OF PAST PROGRAMS

The City has tracked unbilled metered consumption for 5 years in an effort to reduce the DSL. The average DSL from the last plan was 12 percent of production. The current 3-year rolling average of DSL is 7.7 percent so through the City's efforts since the last plan, they have been able to achieve their first goal. If DSL had remained at 12 percent of production, the total DSL from 2007-2013 would have been 274 million gallons. The actual DSL was 215 million gallons which represents a savings of 59 million gallons.

The average ERU value from the last plan was 195 gpd/ERU. A 10 percent reduction in ERU value would have meant a 176 gpd/ERU value in 2026. The 7 year average ERU was 159 gpd/ERU or an 18 percent reduction in ERU value. This far exceeded the planned 10 percent reduction in 20 years.

TABLE 6-1

WUE Savings

Year	Actual Production (gpd)	DSL with no WUE (gpd)(1)	Actual DSL (gpd)	Total Water Savings (gpd)
2007	903,904	108,500	92,023	16,500
2008	918,150	110,200	115,212	-5,000
2009	964,200	115,700	98,084	17,600
2010	878,644	105,400	85,314	20,100
2011	861,219	103,300	68,591	34,700
2012	858,943	103,100	61,006	42,100
2013	869,208	104,300	70,027	34,300
2007-2013 Savings (gallons):				59,000,000

(1) Based on the average DSL from 2001-2006.

PLANNING REQUIREMENTS

Under the WUE Rule, water systems are required to implement planning methods to forecast future demands and determine necessary measures to reduce usage and demand. Elements of the planning requirements include:

1. Data collection;
2. Demand forecasts; and
3. Selection and evaluation of WUE measures.

DATA COLLECTION AND REPORTING

The WUE Rule requires regular collection of production and consumption data. Data must be reported in the City's planning documents and annual performance report to DOH. Water use data will be used by the City for the following:

- Calculating leakage;
- Forecasting demand for future water needs;
- Identifying areas for more efficient water use;
- Evaluating the success of the City's WUE program;
- Describing water supply characteristics; and
- Aiding in decision-making about water management.

This data is needed to meet the planning and performance reporting requirements and to check compliance with the distribution system leakage standard of the WUE Rule.

TABLE 6-2

Summary of Water Use Data Collection

Data Type	Unit of Measure	Collection Frequency	Comments
Source of Supply Meter Readings	Cubic Feet	Daily	Production data is collected at the wells daily and reported on a monthly basis
Single-Family, Multi-Family, and Industrial/Commercial Service Meter Readings	Cubic Feet	Bimonthly	Total water use by customer class for each billing period

DEMAND FORECAST

Demand forecasting is an essential element of planning. It provides a basis for comparison for growth and usage, and also helps in scheduling system improvements. For the purposes of the WUE Rule, forecasting is used in goal setting and measuring the success of the WUE program. Complete demand forecasts are provided in Chapter 2 of

this plan. Those forecasts do not include anticipated reductions in use from conservation and efficient water use efforts.

WUE MEASURES

The WUE Rule requires the evaluation or implementation of water use efficiency measures to help meet the WUE goals. The WUE Guidebook states several measures that must be implemented or evaluated and provides a list of measures that can be counted as additional measures in the WUE program. WAC 246-290-810 identifies the minimum number of water use efficiency measures that must be evaluated based on system size. The City serves between 2,500 and 9,999 customers and therefore must evaluate or implement six water use efficiency measures.

Additional discussion of the City's measures is included later in this chapter.

DISTRIBUTION SYSTEM LEAKAGE

The WUE Rule now requires that water distribution systems have a leakage rate less than 10 percent of finished water production. Distribution System Leakage (DSL) is all unauthorized uses, water system leakage, and any authorized uses the water system does not track (WAC 246-290-820(2)). Typical DSL sources include any water loss due to leaks, unauthorized uses such as illegal service connections, accounting errors, inaccurate source and customer meters, and water leaving the system for unmetered and/or unestimated usage such as flushing of water mains, fire flows, and use by unmetered services. Unbilled consumption includes flushing water mains, fire flows, fire flow testing, or any other use by the City that is metered or can accurately be estimated.

The City's 3-year rolling average of DSL is low compared to many other communities and is shown in Table 6-3. During the previous 7 years the City has put efforts into reducing DSL by fixing known leaks and replacing old water mains. The City's 3-year rolling average has decreased every year for the past 5 years.

The 5-year average unbilled consumption is 1.4 percent of total production. Approximately this much unbilled consumption can be expected annually and will be used of future projections.

TABLE 6-3

Distribution System Leakage

Year	Production (gpd)	Billed Consumption (gpd)	Unbilled Consumption (gpd)	DSL (gpd)	DSL (%)	3-Year DSL Rolling Average (%)
2007	903,904	811,881	NA(1)	92,023	10.2%	11.0%
2008	918,150	802,938	NA(1)	115,212	12.5%	11.3%
2009	964,200	850,525	15,590	98,084	10.2%	11.0%
2010	878,644	780,498	12,831	85,314	9.7%	10.8%
2011	861,219	781,010	11,618	68,591	8.0%	9.3%
2012	858,943	788,441	9,496	61,006	7.1%	8.3%
2013	869,208	788,083	11,099	70,027	8.1%	7.7%

(1) Unbilled Consumption was not tracked until 2009

SOURCE AND SERVICE METERING

The WUE Rule requires all sources and customer service connections be metered by 2017. The City currently meters all sources and customers and is; therefore, in full compliance with this requirement. All new sources and customers will also be metered.

GOAL SETTING AND PERFORMANCE REPORTING

The City must set water use efficiency goals and report progress annually. The annual report must include:

- Total source production.
- Distribution system leakage in percentage and volume.
- Goal description, schedule, and progress toward meeting goals.

Goals must include a measurable outcome, address water supply or demand characteristics, and include an implementation schedule. The goal setting process must be held through a public forum and be reevaluated every 6 years. Annual reports must be available to the public and submitted to customers and DOH. Annual reports were first due July 1, 2008, and have been due each year thereafter.

WATER USE EFFICIENCY PROGRAM DEVELOPMENT AND LEVEL OF IMPLEMENTATION

The following sections describe the City's water use efficiency goals, a description of the conservation measures, and the resulting water use projections.

WATER USE EFFICIENCY GOALS

The City plans to reduce its total water use in two ways. First, the City will reduce the amount of DSL. The City currently has a relatively low rate of DSL, but will work to further reduce this rate. This adjustment is effective in reducing the overall source production requirement without affecting the customers' water usage patterns. Second, the City will promote conservation by its customers to reduce the consumption per ERU.

Goal No. 1 of the water use efficiency program is to reduce the DSL to 6.9 percent within a 6-year period. The City currently loses an average of 7.7 percent of the water produced and is below the requirement set by DOH in the WUE. The City will continue to minimize the amount of DSL and accurately track all water used including estimating the amount of water used for distribution system flushing.

TABLE 6-4

Projected DSL Reduction

Year	DSL (%)	3-Year Rolling Average DSL
3-Year Average	7.7	
2015	7.6	7.6
2016	7.5	7.6
2017	7.3	7.5
2018	7.2	7.3
2019	7.1	7.2
2020	6.9	7.1

Goal No. 2 of the water use efficiency program is to reduce the customer consumption by 10 percent over the 6-year planning period. The success of this goal will be measured in terms of consumption per ERU.

TABLE 6-5

Projected ERU Reduction

Year	Consumption (gpd/ERU)
2007-2013 Average	159
2015	156
2016	154
2017	151
2018	148
2019	146
2020	143

Chapter 2 defined the ERU value as 159 gallons per day (gpd) based on the average water consumption of the single family residential customer class from 2007 to 2013. From 2011-2013, the water use by this customer class was the lowest recorded during the previous seven years. It should be noted that the ERU defines the *average* water consumption and water usage varies significantly between customers.

EVALUATION AND SELECTION OF WATER USE EFFICIENCY MEASURES

WAC 246-290-810 identifies the minimum number of water use efficiency measures that must be evaluated based on system size. The City serves between 2,500 and 9,999 customers and therefore must evaluate or implement six water use efficiency measures. The following sections describe the mandatory water use efficiency measures implemented and indicate additional supplementary measures performed by the City.

On top of the measures below, new home construction practices can result in a decline in the average ERU value for two reasons. First, new homes are being constructed to a greater density than seen in the past, which results in less lawn area for irrigation. Second, current building codes require the installation of higher efficiency plumbing fixtures that result in lower water consumption.

Mandatory Measures

Source and Service Metering

As stated previously, the City currently meters all customers and sources. The City will continue to meter all new customers and sources. Meters are tested for accuracy upon request from the customer or if the City feels it is warranted.

Leak Detection and Water Accounting

The City's DSL was approximately 7.7 percent over the previous 3 years. Semi-annual water main flushing was considered the primary source of leakage until the City started tracking or estimating volumes in 2009. Pending the DOH approval of Lincoln Well No. 2, the Pugh Well will be used less frequently, thus reducing iron bacteria in the distribution system and lessening the need to flush the East High and Middle Zones. The new well is considered another step in helping the City reduce water use.

As the rate of leakage is refined, the City plans to implement a leak detection program. The program will be focused on areas suspected of leaks and in areas of aging infrastructure. Corrective action will be taken as necessary.

Customer Education

The City distributes its water use efficiency program by providing inserts into its utility bills. The inserts inform the customer of ways they can reduce their water demands and also educate customer of the ways the City is working to improve system efficiency. Additional information is provided in the *Annual Drinking Water Quality Report*. The City will continue to distribute water use efficiency information to its customers.

Conservation Pricing

The City has a rate structure to promote conservation by its customers. During the low usage months, the commodity charge is uniform for all water use. However, during the typical peak usage months, the commodity charge for residential customers is 56 percent greater for usage above 1,000 cubic feet per month, which is approximately 245 gpd. Customers outside the city limits are also billed a higher rate during the summer months than the winter months. Table 6-6 summarizes the commodity charges for the water system.

TABLE 6-6

Water System Commodity Charges

Commodity Charge	Winter (October - May)	Summer (June – September)
Inside City Limits		
0-1,000 cubic feet	$1.80	$1.80
1,000+ cubic feet	$1.80	$2.81
Outside City Limits		
All usage	$2.30	$3.36

Future adjustments to water rates and rate structure will consider the effects of conservation.

During the next rate study, the City will also consider inclining block rates for commercial customers to promote conservation.

Reclaimed Water

The City sends all of their wastewater to the Central Kitsap Treatment Plant. In March 2013, the treatment plant started construction on a tertiary treatment system with chlorination for reclaimed water. The project is expected to be completed in June 2015. For the City to be able to utilize this water for irrigation or agricultural purposes, they would need to install more than 6 miles of pipe from the treatment plant just to reach the southwest corner of the City. Additional pipe would be needed to reach downtown, the

schools, or other areas for irrigation. At this time, it is not financially feasible to install pipe for irrigation with reclaimed water.

Supplemental

Water Use Ordinances

Per City ordinance, customers are allowed to sprinkle lawns, gardens, and shrubs only from 6 a.m. to 10 a.m. and 6 p.m. to 10 p.m. This measure limits the amount of water lost due to evaporation from mid-day heat. The ordinance is enforced by City staff, the police department, and volunteer citizens. The City allows the school district to exceed these hours because their irrigation systems are set on timers for nighttime hours. A copy of this ordinance is included in Appendix G.

Irrigation Audits

The City performs irrigation audits of customers believed to be using water wastefully. These customers are visited and provided advice on efficient irrigation practices, scheduling, and application rates.

Bill Showing Consumption History

All water utility bills include a chart showing past consumption by the customer. This allows the customer to track their water use and compare usage to previous billing period. The City began this practice in 2003 and believes it to be partially responsible for the reduction in the ERU value. The City plans to continue using this water use efficiency measure.

Summary of Supplementary Measures

Based on their number of connections, the City must implement or evaluate six measures. Table 6-7 provides a summary of measures.

TABLE 6-7

Water System Commodity Charges

Measure for Implementation	Customer Classes Affected
Bills Showing Consumption History	6
Water Use Ordinances	3
Irrigation Audits	1
Seasonal Rate Structure	3
Total	**13**

TARGET WATER SAVINGS PROJECTIONS

Table 6-8 compares the average day demand with and without water use efficiency savings. The water use efficiency savings projections include goals No. 1 and No. 2 described earlier in this Chapter. At the end of the 6-year planning period (2020), these water use efficiency measures will account for an average savings of 69,000 gpd, or 77 acre-ft/yr.

TABLE 6-8

Projected Water Use Efficiency Savings

Year	No. of ERUs	Average Consumption per ERU (gpd/ERU)	DSL	Average Day Demand with Water Use Efficiency		Average Day Demand without Water Use Efficiency		Water Use Efficiency Savings per Year	
				(gpd)	(acre-ft/yr)	(gpd)	(acre-ft/yr)	(gpd)	(acre-ft/yr)
2014	5,692	159(1)	7.7%(2)	1,001,800	1,122	1,001,800	1,122	0	0
2015	5,812	157	7.6%	1,004,500	1,125	1,022,900	1,146	18,400	21
2016	5,934	155	7.4%	1,006,800	1,128	1,044,400	1,170	37,600	42
2017	6,060	152	7.3%	1,008,900	1,130	1,066,500	1,195	57,600	65
2018	6,189	149	7.2%	1,011,000	1,133	1,089,300	1,220	78,300	88
2019	6,322	147	7.1%	1,012,900	1,135	1,112,700	1,246	99,800	112
2020	6,441	144	6.9%	1,011,700	1,133	1,133,600	1,270	121,900	137

(1) 2007-2013 Average value.
(2) 3-Year Average DSL value.

SOURCE OF SUPPLY ANALYSIS

OPTIMIZING USE OF CURRENT SUPPLIES

The City has increased the efficiency of its water system in the past 10 years by reducing the average water consumption and reducing the rate of DSL. The City plans to continue these efforts to further optimize current water supply. The City's current water rights total 1,893 acre-ft/yr. Without any improvement in water use efficiency, the City has sufficient annual water rights beyond 2034 as discussed in Chapter 3. However, the City will need to install additional source capacity to meet maximum day demands as mentioned in Chapter 3.

ENHANCED CONSERVATION MEASURES

As technology for water leak detection and repair advances and as more water efficient building fixtures and appliances become more standard, water conservation will be enhanced by implementation of standard building codes and replacement of aging fixture and appliances with newer, more water efficient units.

WATER RIGHT CHANGES

Assuming no changes in water use efficiency, the City will not need any additional annual water rights by 2034.

INTERTIES

The City and the PUD have an agreement for wholesale water supply on an emergency basis only. The City does not plan on using the intertie for meeting normal demands.

ARTIFICIAL RECHARGE

At this time there are no plans for any kind of artificial recharge of the aquifers in the Poulsbo area. The City has not had problems with their ground water supply and there is no reason at this time to consider an artificial recharge program.

CHAPTER 7

OPERATION AND MAINTENANCE PROGRAM

OBJECTIVE

The chapter provides an evaluation of the City's operation and maintenance (O&M) program and its ability to assure satisfactory management of the water system operations in accordance with WAC 246-290-100, -300, -310, -320, -440, -480, and -490, and WAC 246-292-020, -050, and -090.

WATER SYSTEM ORGANIZATION

ORGANIZATIONAL CHART

Figure 7-1 provides an organizational chart for the City's Public Works Department (PWD). The PWD is co-managed by two Assistant Public Works Directors and is comprised of two primary divisions: Operations/Maintenance and Engineering. The divisions are managed by a Public Works Superintendent and a City Engineer. In addition to the water utility, the PWD also includes sanitary sewer, stormwater, and solid waste utilities as well as managing the parks, streets, and public buildings. Public Works staff generally split their time between various duties, although a few operations and maintenance staff are fully dedicated to the water utility.

ROLES AND RESPONSIBILITIES

The following sections provide a description of the roles and responsibilities of key personnel involved with the water system.

Assistant Public Works Director

The Assistant Public Works Director is responsible for the direction and oversight of the PWD including engineering, O&M, and administrative staff. The Public Works budget process is managed by the director, but includes input from other staff members. The director is responsible for administering emergency operations plans as well as being the spokesperson for public announcements.

Engineering Staff

The engineering staff is responsible for maintaining compliance with regulatory agencies, administering consultant and construction contracts, and oversight of construction activity.

Operations and Maintenance Staff

The operations and maintenance staff is responsible for the ensuring the safe and reliable operation of existing City facilities. Staff functions relating to the water utility typically include monitoring facilities, performing maintenance, water quality sampling, reading meters, installing new water services, and responding to customer complaints. As needed, staff is available for responding to emergencies. The industry standard is one staff member per 400 connections. The City has over 3,300 connections and the O&M staff is composed of only four individuals. Most systems of the City's size would expect to employ at least eight individuals dedicated to O&M.

Utility Billing Staff

The utility billing section of the Finance Department is responsible for the calculation, mailing, receiving, and processing of bills for the City's utilities. Bills are sent to water customers on a monthly basis. This department is also responsible for scheduling turn-ons, turn-offs, and rereads with the meter reading staff as necessary or upon request from a customer.

OPERATOR CERTIFICATION

Water Works Operator Certification, required under WAC 246-292-060, mandates Washington State Group A public water systems retain in their employment individuals who are certified, by examination, as competent in water supply operation and management. The Washington State Department of Health (DOH) determines the required level and number of certified positions based on the population and complexity of the water system. The City serves between 1,501 and 15,000 people and is thereby classified as a Group 2 Water System, which requires that at least one employee be certified as a Level 2 Water Distribution Manager (WDM-2). The City has two employees certified as WDM-2 and two employees certified as WDM-1.

In addition, the City administers its own cross-connection control program, which requires that a certified Cross-Connection Control Specialist (CCS) be retained. A Backflow Assembly Tester (BAT) is necessary to periodically inspect cross-connection control devices. The City has four employees with the CCS certification and two employees with BAT certification.

Table 7-1 summarizes the City's personnel certification levels. The City meets all DOH certification requirements.

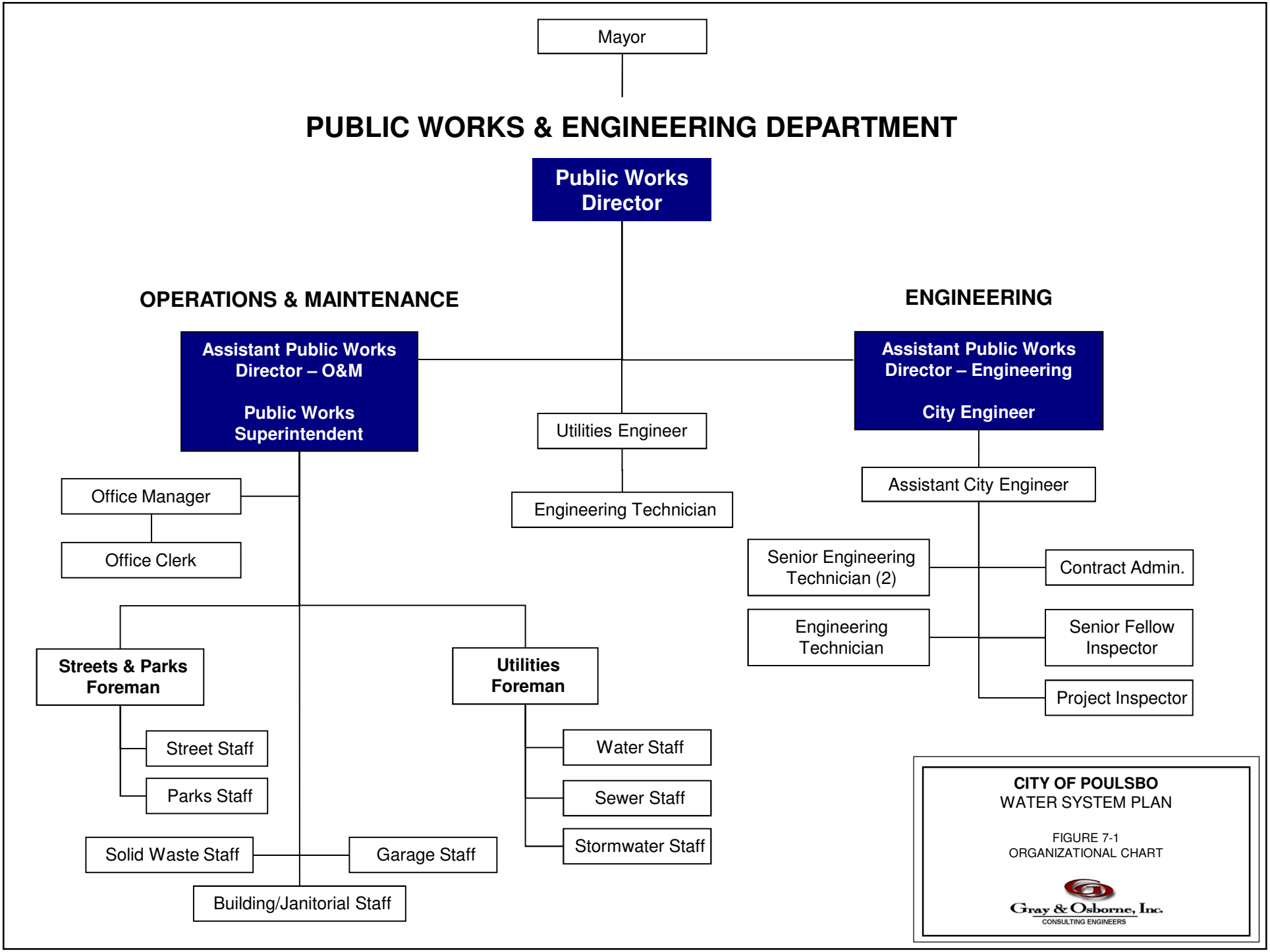
Mayor
PUBLIC WORKS & ENGINEERING DEPARTMENT
Public Works Director
OPERATIONS & MAINTENANCE
ENGINEERING
Assistant Public Works Director – O&M
Public Works Superintendent
Assistant Public Works Director – Engineering
City Engineer
Utilities Engineer
Engineering Technician
Office Manager
Office Clerk
Assistant City Engineer
Senior Engineering Technician (2)
Contract Admin.
Engineering Technician
Senior Fellow Inspector
Project Inspector
Streets & Parks Foreman
Utilities Foreman
Street Staff
Parks Staff
Water Staff
Sewer Staff
Stormwater Staff
Solid Waste Staff
Garage Staff
Building/Janitorial Staff
CITY OF POULSBO
WATER SYSTEM PLAN
FIGURE 7-1
ORGANIZATIONAL CHART
Gray & Osborne, Inc.
CONSULTING ENGINEERS

TABLE 7-1

Operator Certification

Position	Name	Certification(1)
Utilities Foreman	Keith Svarthumle	WDM-2, CCS, BAT
Streets and Parks Foreman	Joe Walker	WDM-2, CCS
O&M Staff	Rick Jordan	WDM-1, CCS, WDS
O&M Staff	Robert Perkins	WDS
O&M Staff	Ryan Golden	WDM-1
O&M Staff	Sev Hoiness	WDM-2

(1) Water Distribution Manager (WDM), Water Distribution Specialist (WDS), Cross-Connection Control Specialist (CCS), Backflow Assembly Tester (BAT).

Professional Growth Requirements

In order to promote and maintain expertise for the various grades of operator certification, Washington State requires that all certified operators complete no less than three Continuing Education Units (CEU) within each 3-year period. Programs sponsored by both Washington Environmental Training Resources Center (WETRC) and the American Waterworks Association (AWWA) Pacific Northwest Subsection are the most popular source of CEUs for certified operators in Washington State.

Besides providing CEUs, operator training is an important component in maintaining a safe and reliable water system. At a minimum, all personnel performing water system related duties should receive training in the following areas:

- Confined space
- Trenching and shoring
- Traffic flagging
- Asbestos cement pipe safety
- Cross-connection control

SYSTEM OPERATION AND CONTROL

DESCRIPTION AND LOCATION OF FACILITIES

All water system facilities, including source, storage, transmission, and distribution facilities are described in Chapter 1 and their locations are provided in Figure 1-3.

NORMAL OPERATION

The water system provides service to customers by gravity supply from reservoirs in six pressure zones. Reservoirs in the Low, West High, and East High Zones are supplied by wells on a draw and fill scheme. The Middle Zone reservoirs are supplied by the Mesford PRV that transfers supply from the East High Zone. The Poulsbo Place Booster Station is continuously operated to maintain pressures within a small closed zone near the 4th Avenue Reservoirs. This is the only area of the City that is not served directly by gravity from a reservoir.

Table 7-2 provides the operational settings for all supply sources.

TABLE 7-2

Source Operational Settings

Zone Supplied	Supply Source	On Setting	Off Setting	Controlling Parameter
Low Zone	Big Valley Wells	34 ft	38 ft	Wilderness Park Level
	Poulsbo Place Booster Station	65 psi	None	Discharge Pressure
East High Zone	Pugh Road Well	34 ft	38 ft	Pugh Reservoir Level
	Lincoln Well	34 ft	38 ft	Pugh Reservoir Level
	Wilderness Park Booster Station	Manual	Manual	Pugh Reservoir Level
West High Zone	Westside Well	105 ft	115 ft	Olhava Standpipe Level
Stendhal Zone	Stendahl PRV	105psi	none	Discharge Pressure
Middle Zone	Mesford PRV	14 ft	16 ft	Raab Park Reservoir Level

ALTERNATE OPERATION

The Pugh Well supply introduces iron bacteria into the East High and Middle Zone distribution systems and reservoirs. A significant amount of the iron bacteria accumulate in the Pugh Reservoir. To minimize the amount that enters the distribution system, the City cleans the reservoir twice yearly. Doing so requires that the Pugh Reservoir is taken off-line and storage to the East High Zone is supplied by the Lincoln Standpipe. Prior to using the Lincoln Standpipe, it is cleaned and disinfected. During normal operation, the Lincoln Standpipe is empty and not used. Lincoln Well No. 2 was drilled in 2007 and is

pending approval from DOH. Utilizing this well will lessen the need to clean the Pugh Reservoir.

SYSTEM MONITORING AND CONTROL

The City has a Supervisory Control and Data Acquisition System (SCADA) that allows the system operators to remotely control many system features and monitor system status. The SCADA system was designed by US Filter and installed in 2005 with an upgrade completed in 2006. The master control center is maintained at the City's Public Works Shop. This master control center contains a programmable logic controller (PLC) that contains all of the control and alarm logic for the water system. The control center communicates with nine remote telemetry units (RTUs) through a dedicated radio system. Table 7-3 lists the name of all RTU sites and identifies the parameters that can be controlled or monitored at each site. Data transmitted to the control center is recorded and saved within a stand alone computer.

TABLE 7-3

SCADA System Monitoring and Control

Station Location	Monitored Parameters	Control Parameters
Pugh Reservoir and Well Site	Reservoir Level Well Status	Well On/Off Settings
Lincoln Well	Well Status	Well On/Off Settings
Mesford PRV	PRV Status	PRV On/Off Settings
Raab Park Reservoirs	Reservoir Level	None
Wilderness Park Reservoir	Reservoir Level	None
Big Valley Wells	Well Status	Well On/Off Settings
Viking Avenue Booster Station	Pump Status	Pump On/Off Settings
Westside Well	Well Status	Well On/Off Settings
Olhava Standpipe	Reservoir Level	None

COMPREHENSIVE MONITORING AND RECORD KEEPING

WATER QUALITY MONITORING

The City monitors its water quality to ensure a safe supply is provided to its customers. Chapter 5 provides the results of previous water quality sampling as well as the anticipated schedule for future sampling. The City meets all required water quality sampling requirements.

WATER USE DATA COLLECTION

The City collects and maintains records of past water use for customer billing, capacity analyses, tracking conservation, and monitoring trends. The data collected and the collection frequency is described in Chapter 6 as part of the water conservation program. Records of past water use are presented in Chapter 2.

PREVENTATIVE MAINTENANCE PROGRAM

Maintenance of the water system is generally on an as-needed basis. Facility components are repaired or replaced as they are damaged, worn out, or expended. The City does perform regular water main flushing to exercise hydrants and valves, remove accumulated sediment, and minimize water quality complaints. In the spring of each year, City staff flush the entire water system. In the fall, the East High and Middle Zones are flushed again to remove iron bacteria introduced by the Pugh Well.

EMERGENCY RESPONSE PROGRAM

The City completed a Comprehensive Emergency Management Plan (CEMP) in October 2004. The CEMP identifies the authorities and responsibilities of the City during an emergency. This is not specifically tailored to the emergency response of the water system, but does provide a framework for organizing and executing a successful response to an emergency.

EMERGENCY CALL-UP LIST

The Public Works Department maintains a list of emergency contact phone numbers for all staff members. In the event of an emergency, the initial emergency responder is responsible for notifying the appropriate personnel to coordinate a response. The emergency contact list also includes the names and phone numbers of equipment and materials suppliers and contractors that may be necessary to make emergency repairs or assist in emergency functions.

NOTIFICATION PROCEDURES

Bacteriological Presence Detection Procedure

As documented in Chapter 5, the City has infrequently detected bacteriological coliforms in its drinking water. However, the City remains prepared to respond to contamination and notify the public of such contamination if it occurs.

Notification procedures for notifying system customers, the local health department, and DOH of water quality emergencies are an important component of an emergency response program. Many public water systems will occasionally detect positive coliform

samples, mainly as a result of minor contamination in distribution mains or sample taps, or improper bacteriological sampling procedures. However, the persistent detection of coliforms in the water supply, particularly E. coli or fecal bacteria, may require issuing a public boil water notice to ensure the health and safety of the water customers. Water quality can be negatively affected if water system facilities are damaged by floods, earthquakes, and other disasters. All customers should be notified through a boil water notice in the event of water system contamination. WAC 246-290-320 requires water utilities to follow specified procedures in the event coliform bacteria are detected in the water system. Table 7-4 provides a list of tasks that should be undertaken in the event of a bacteriological contamination.

TABLE 7-4

Water Bacteriological Contamination Response

System Component	Action
Distribution System Bacteriological Contamination	• Perform free chlorine residual analysis at various locations within the system, including the reservoirs and the system extremities. • Disinfect distribution lines as dictated by the nature of the contamination.
Reservoir Bacteriological Contamination	• Resample to confirm contamination • Check distribution system for presence of contamination. • Isolate reservoir from system. • Inspect vent screens, hatches, and piping to identify source of contamination. • If reservoir water is contaminated and therefore considered unsuitable for consumption, drain and clean reservoir. • Consider disinfecting reservoir if bacteriological standards are exceeded. Follow AWWA Standards. Spray wall with super-chlorinated solution.

VOC, SOC, IOC, and Physical Characteristics Detection Procedures

In the event of an inorganic chemical/physical property, volatile organic chemical or synthetic organic chemical detection, the City will comply with all DOH requirements and notify them at the appropriate time.

Power Failure

Various types of weather can cause loss of power, such as wind, lightning, freezing rain, and freezing snowstorms. Additionally, power can be lost through traffic accidents. The City has an onsite generator located in the Pugh Well building. In addition, the Big Valley Wells, Lincoln Well, and Westside Well have auxiliary power receptacles that allow the City to connect a 125 kW portable generator. The Viking, Poulsbo Place, and Wilderness Booster Stations do not have auxiliary power receptacles.

If an extended power outage is anticipated, customers will be notified of any anticipated water supply problems that may occur. If necessary, water conservation will be requested through radio, television, newspaper, and/or police loudspeaker.

Severe Earthquake

A severe earthquake could result in transmission line breaks, distribution system breaks and structural damage to the reservoirs, wells and to vaults which house critical valving and meters. Table 7-5 addresses the possible emergency events and response actions that should be taken in the event of an earthquake.

TABLE 7-5

Earthquake Emergency Response Actions

System Component	Action
Distribution System The nature of the emergency would depend on the area of the distribution system in which the break occurred.	• Close valves to isolate breaks in water mains. • Check reservoir level. • Notify water customers of emergency and request customers to conserve water. • Shut down well pumps. • Isolate break, check the base water system section maps for valve locations. • Repair break. • Disinfect isolated section.
Reservoirs	• Observe structures for visual signs of structural damage, leakage, cracks, etc. Also check storm drainage system in the vicinity for significant flows. • If non-observable leakage is suspected, isolate one reservoir at a time and monitor water level for at least 24 hours. • If structural damage is apparent, drain reservoir and inspect the interior of the tank.

TABLE 7-5 – (continued)

Earthquake Emergency Response Actions

System Component	Action
Booster Station	• All booster station structures and piping should be inspected following a major earthquake to check for joint leakage caused by earth movements.
Source Meters	• Inspect all source meters and vaults, for leakage or other structural damage.

Freezing Weather

Freezing weather may cause water mains to freeze and break. All broken water mains should be isolated as soon as possible. Heavy snowfall may also bring motor vehicle traffic to a standstill. Snowfall may also prevent City employees from reaching a problem area quickly. Table 7-6 addresses the possible emergency events and response actions that should be taken in the event of freezing weather or a severe snowstorm.

TABLE 7-6

Freezing Weather and Severe Snowstorm Emergency Response Actions

System Component	Action
Distribution System: Transportation to monitor system and make repairs will be limited.	• The City will expedite plowing to any problem area. • Have chains and snow gear ready for maintenance equipment and vehicles • Valve locations should be made available for maintenance personnel and kept current • Frozen pipes should be isolated
Reservoirs: No immediate effect. Snow may prevent access.	• Clear snow from roads, walkways, and roof

VULNERABILITY ANALYSIS

The City completed a vulnerability assessment in 2011 by Krazen and Associates that provided the City with a seismic recommendation of the existing storage facility sites. Based on the findings, City staff compiled a list of improvements to be made to bring the existing storage facilities up to current seismic code. Projects are described in the capital improvement plan in Chapter 9.

CONTINGENCY OPERATIONAL PLAN

The City has alternate operations plans in the event that water system facilities are inoperable during or after an emergency. The City has a redundant source of supply to all pressure zones. If a supply source is out of service the alternate source(s) will be used. This may require using the emergency intertie with the Vinland Water System.

Loss of Source

The consequence of losing source capacity is dependant on the time of year at which the loss occurs. A loss of supply during the colder months when landscape irrigation is not occurring would not create a significant operational problem. During the peak water usage periods, a loss of supply would cause a significant strain on the remaining sources to provide the necessary supply. In these situations, the City may need to rely on standby storage volumes in the reservoirs while source repairs are performed. The City may also need to use the Vinland intertie as an emergency source of supply.

Simultaneous loss of multiple sources further compounds the problem and will almost certainly require Vinland supply if the loss occurs in the summer months.

Loss of Storage

If a storage facility needs to be removed from service due to damage, contamination, or other health and safety concern, the City can keep its customers in service by relying on other facilities. The Low and Middle Pressures Zone have multiple reservoirs that provide redundancy to one another. If one of these facilities is removed from service, the City will be able to maintain service pressures and a high level of service to customers.

Removal of the Pugh Reservoir from service will require that the City clean and disinfect the Lincoln Standpipe and place it into service. The Lincoln Standpipe can serve the East High Zone, although customers located around the base of the reservoir will experience service pressures below 30 psi. The Lincoln Standpipe is significantly smaller than the Pugh Reservoir and will therefore provide a lesser amount of storage for additional contingencies, such as a fire or loss of source.

Removal of the Olhava Standpipe will create a greater operational challenge to the water system. No additional City owned storage facilities exist in the West High Zone. In this scenario, the City can serve the zone as a closed pressure zone by using the Westside Well and Viking Avenue Booster Station. This option will require modification of an existing pressure reducing valve to allow the valve to also act as a pressure relief valve. Alternately, the City can request that the area be temporarily served by the Vinland water system, which has storage facilities that can adequately serve the West High Zone.

CROSS-CONNECTION CONTROL PROGRAM

The City has implemented a cross-connection control program. The Utilities Foreman maintains a database of all backflow prevention devices in the City. Annual notices are sent to the owners of backflow assemblies reminding them of the need for periodic testing. As time allows, City staff inspect high risk customer's premises to evaluate conformance with the cross-connection control requirements. A copy of the City's current cross-connection control program is included in Appendix H. The City is presently updating the cross-connection program and it will be included in the next WSP update. The City's current practices and annual summary report submitted to DOH meet all of DOH's requirements.

SAFETY PROCEDURES

Work place hazards for this system are primarily limited to traffic control, confined space entry, asbestos-cement pipe handling, and access for elevated structures. City personnel are certified in the proper handling and tapping of asbestos-cement pipe. Staff is also trained as to proper entry into confined spaces such as below grade equipment vaults. Inspection of storage is made using the proper harness and restraining devices to prevent accidental falls. The City conducts regular safety meetings to discuss proper safety procedures for work place hazards.

CUSTOMER COMPLAINT RESPONSE

The City responds to all customer complaints. Administrative staff generally receive initial customer contact where the complaint is taken. The Utilities Foreman is notified of all complaints and decides how to resolve the situation. If a complaint cannot be resolved by phone, staff will visit the customer and take appropriate action.

CHAPTER 8

DISTRIBUTION FACILITIES DESIGN AND CONSTRUCTION STANDARDS

OBJECTIVE

The objective of this chapter is to document the City's design and construction standards to allow the City to obtain DOH approval to utilize the alternative review process for construction of new and replaced water distribution facilities. Through this process, a purveyor needs no further approval from DOH for distribution project reports, construction documents, or installation of distribution reservoirs and storage tanks, booster pump facilities, transmission mains, distribution mains, pipe linings, and tank coatings. Source of supply facilities are not eligible for the alternative review process

This chapter includes project review procedures, system standard, policies, and procedures, and construction certification and follow-up procedures.

PROJECT REVIEW PROCEDURES

Project review procedures vary with the level of complexity of the anticipated project. Pursuant to WAC 246-290-125, the following projects do not require DOH approval:

- Installation of valves, fittings, meters, and backflow prevention devices.
- Installation of fire hydrants.
- Repair of a system component or replacement with a similar component.
- Maintenance or painting of surfaces not contacting potable water.

The City will use the submittal exception process for new water distribution main projects as outlined in WAC 246-290-125. Construction documents for new water distribution mains will not be submitted to DOH for review. All other water system projects will require DOH review and approval.

The City's Public Works Department reviews all water system improvements and replacement projects during the design phase. This review ensures the project is in compliance with the Developer's Guide and Construction Standards. During construction, the design engineer, in conjunction with representatives from Public Works, will make site visits to ensure the project is constructed in accordance with the construction specifications. Any changes from the construction specifications will require written approval from the Public Works Director.

Connection of additional water customers will be permitted on an on-going basis as requests for service are made to the City. Review for new customers will be done

through Public Works Department. Prior to activation of the service connection, a Cross-Connection Control Specialist is required to review the backflow prevention assembly installation, if one is required, for compliance with Cross-Connection Control requirements.

SYSTEM STANDARDS, POLICIES AND PROCEDURES

Design and construction of water facilities are to be in accordance with the construction standards set forth by the City and included in Appendix C. Table 8-1 provides a list of the construction standard documents published by the City.

TABLE 8-1

City of Poulsbo Construction Standard Details

Standard Figure	Title
4-01	Vertical/Horizontal Concrete Blocking Tie Back Blocks
4-02	Horizontal Thrust Blocking Detail
4-03	Concrete Slope Anchor Detail
4-05	Standard Fire Hydrant
4-06	Quad Water Service
4-07	Fire Hydrant Post and Valve Marker Post
4-08A	Standard Blow-Off Assembly Below Ground Detail
4-08B	Standard Blow-Off Assembly Above Ground Detail
4-09	2" Air and Vacuum Release Valve Assembly, 12" Main or Larger
4-10	1" Air and Vacuum Release Valve Assembly, 10" Main or Smaller
4-11	Valve Operating Extension and Detail
4-12	Standard Pressure Reducing Station Detail
4-13	Typical Water Service 1-1/2" to 2" Detail
4-14	Typical Water Service 3/4" to 1" Detail
4-15	Double Service Connection 3/4" to 1" Diameter Detail
4-16	Typical Compound Water Meter Installation 3" to 10"
4-17	Typical Compound Water Meter Elevation View of Installation, 3" to 10" with Bypass
4-18	Typical Turbine Water Meter Installation 3" to 10"
4-19	Typical Turbine Water Meter with Bypass
4-20	Double Check Valve
4-21	Stainless Steel Tapping Tee
4-22	3/4" to 2" Outside Installed Double Check Valve
4-23	Schematic Layout for PIV and FDC

CONSTRUCTION CERTIFICATION AND FOLLOW-UP PROCEDURES

During the construction of any water facility, City's Public Works Department will have a representative periodically inspect the construction. The representative will report progress and any variance from the construction documents to the engineer responsible for construction management. Additionally, the representative will be present for all pressure tests, disinfection procedures and water quality sampling as defined in the standards.

Significant changes in the project design during construction of DOH approved projects will require notifying DOH prior to approval to proceed. Upon completion of the project, the engineer responsible for construction management shall complete a Construction Completion Report for Water System Projects form, pursuant to WAC 246-290-040. This form is an Engineer's certification that the project was completed in conformance with the approved plans, specifications, and City's Construction Standards. For projects completed under Project Submittal Exceptions, pursuant to WAC 246-290-125, the Construction Completion Report form shall be submitted to Public Works, where it will be maintained on file and made available for DOH review on request. For projects requiring DOH approval, the Construction Completion form will be submitted to DOH within 60 days of completion and prior to use of the installation. The construction manager shall prepare record drawings and submit them to the city Public Work for their project files.

CHAPTER 9

CAPITAL IMPROVEMENT PROGRAM

INTRODUCTION

This chapter presents the proposed scheduled to implement the 6-year Capital Improvement Plan (CIP) in accordance with the requirements of WAC 246-290. Water system capital improvements have been scheduled and prioritized on the basis of water quality concerns, growth, regulatory requirements, component reliability, system benefit, and financial priority. Additional projects for the 10- and 20-year planning periods have also been identified; however, projects are currently only scheduled annually through 2024. When the Plan is reviewed at the end of the 6-year planning period, the projects presented for the 10- and 20-year planning period should be reevaluated and scheduled for the subsequent planning period if necessary.

The estimated cost of each of the projects is given in this chapter. Detailed cost estimates are included in Appendix I. It is assumed in each piping cost estimate that road restoration will be required. Coordination with other infrastructure or road paving projects may reduce costs and will be considered in planning for the construction of future facilities.

In the future, other projects may arise that are not identified as part of the City's CIP. Such projects may be deemed necessary for ensuring water quality, preserving emergency water supply, accommodating transportation improvements, or addressing unforeseen problems with the City's water system. Due to budgetary constraints, the completion of these projects may require that the proposed completion date for projects in the CIP be rescheduled. The City retains the flexibility to reschedule proposed projects and to expand or reduce the scope of proposed projects, as best determined by the City Council when new information becomes available for evaluation. Each capital improvement project should be reevaluated to consider the most recent planning efforts as the proposed completion date for the project approaches.

The CIP is categorized into six categories:

- Water Supply Projects (WS)
- Storage Projects (ST)
- Booster Station Projects (BS)
- Distribution System Projects (D)
- Miscellaneous Projects (M)

Each category is further divided into a detailed list of projects presented chronologically over the 6-year and 20-year planning periods. Projects after the 6-year planning period are described along with a cost estimate, but are not scheduled for a specific year.

CAPITAL IMPROVEMENT PLAN

WATER SUPPLY PROJECTS

WS-1: Pugh Well and Lincoln Wells No. 1 and No. 2 Manganese Treatment (2014-2015)

Estimated Project Cost: $800,000

The Pugh Well and Lincoln Wells have higher than normal manganese concentrations in the raw water. High concentrations cause the City to frequently have to flush its water mains and it can add an unwanted color, odor, and taste to the water. The City plans on installing a pilot test system in 2014 ($200,000) and a treatment facility in 2015 ($600,000). The treatment system would reduce or eliminate the manganese from the raw water concentration of 0.109 mg/L to below the EPA secondary MCL concentration of 0.05 mg/L in the finished water.

WS-2: Westside Well Treatment (2017-2018)

Estimated Project Cost: $600,000

The Westside well also has manganese concentrations in the raw water that are slightly higher than the EPA's Secondary MCL. Manganese can add an unwanted color, odor, and taste to the water. The City plans on installing a pilot test system in 2015 ($150,000) and a treatment facility in 2016 ($450,000). The treatment system would reduce the manganese from the raw water concentration of 0.085 mg/L to below 0.05 mg/L in the finished water.

WS-3: Long-Term Water Supply Study (2017)

Estimated Project Cost: $30,000

The City plans to develop a long-term water supply study that identifies alternatives to procuring additional water rights or water supply capacity. The City has sufficient water rights to supply demands through 2034 but will not be able to meet MDD in the recommended 18-hour period starting in 2020.

WS-4: Big Valley Well No. 3 (2022)

Estimated Project Cost: $450,000

The City Plans to drill, develop, and equip a third well at the Big Valley Well site. Additional source capacity is necessary to provide maximum day demand and replenish fire suppression storage by 2034 and a new 500 gpm well will provide sufficient flows.

WS-5: Westside Well No. 2 (2023)

Estimated Project Cost: $412,000

The City plans to drill, develop, and equip a second well at the Westside Well site. Existing sources will need to pump for more than 18 hours to meet MDD beyond 2019. Additional supply capacity should be installed shortly after to reduce the demand on the aquifers and equipment. This project will be re-evaluated upon completion of the long-term water supply study (WS-3).

WS-6: Acquire/Upgrade Supply Capacity (Beyond 2024)

Estimated Project Cost: To Be Determined

The City needs to acquire additional or upgrade current source capacity by 2034 in order to meet its predicted demands and DOH's reliability recommendations. The cost of this project is difficult to assess, but is expected to be on the order of several hundred thousand dollars. Additional direction, including costs, is expected to come from the water supply study project WS-3.

STORAGE PROJECTS

ST-1: Wilderness Park Reservoir Repairs (2016-2017)

Estimated Project Cost: $500,000

Based on a seismic study which evaluated the City's reservoirs, the Wilderness Park Reservoir does not meet current seismic design standards. This project will retrofit the existing reservoir to have additional ties to the foundation to resist overturning forces induced by seismic loads. The foundation itself might need to be reinforced to be able to withstand overturning loads and bearing capacity. The 2016 budget has allocated $80,000 for the repairs and the remaining $420,000 will come from the 2017 budget.

ST-2: Raab Park Reservoir Replacement (2017-2018)

Estimated Project Cost: $680,000

The City plans to replace the existing 150,000-gallon tanks with a 300,000-gallon tank. The existing tank does not meet seismic design standards and is at the end of its useful life. Additional capital improvements may be determined based on the findings of the evaluation. The 2017 budget has allocated $80,000 for the replacement and the remaining $600,000 will come from the 2018 budget.

ST-3: Reservoir Coating Program (2018-2020)

Estimated Project Cost: $600,000

The City plans to recoat the interior and exterior of the Finn Hill and Olhava Reservoirs. Periodic coatings need to be applied to protect the structural steel from corrosion damage. These coatings are normal maintenance. The 2018 budget has allocated $300,000 for the Finn Hill Reservoir and the 2020 budget has allocated $300,000 for the Olhava reservoir.

BOOSTER STATION PROJECTS

BS-1: Wilderness Park Booster Station Replacement (2018)

Estimated Project Cost: $500,000

The City plans to construct a new booster station at the Wilderness Park Reservoir site. The new booster station will transfer supply from the Low Zone to the East High Zone to eliminate the storage deficiency in the East High Zone and provide redundancy to the Pugh and Lincoln Wells. Currently, the City does not have a pumping facility to transfer supply to the East High Zone. The booster station will consist of three 750 gpm pumps, integrated control systems, standby generator, and an automatic transfer switch with a new CMU building.

BS-2: 340 Zone Fire Flow Pump and Zone Expansion (2021)

Estimated Project Cost: $250,000

The 340 Zone currently has houses served by a pump for average day and maximum day demands but is served by gravity for fire flow. The high elevations cause pressures to drop below 20 psi during fire flow emergencies when the reservoirs are depleted of operational storage. A fire flow pump is needed to boost flows and pressures in the 340 Zone and would decrease the large dead storage in the Low Zone. This project will be coupled with a zone expansion to address the low pressure at the 4th Avenue Townhomes since work will need to be performed at the existing booster station. This project will include an additional 250 feet of pipe to expand the zone and the pumps necessary to meet projected demands.

DISTRIBUTION SYSTEM PROJECTS

The following distribution system projects are recommended to increase fire flow, replace undersized water mains, or to accommodate transmission and storage projects.

D-1: Old Town Water Main Replacement (2015-2019)

Estimated Project Cost: $1,080,000

The City plans to replace the undersized and aging water mains in the "old town" area located south of downtown. This area is primarily residential although a few businesses are located along the waterfront. Existing piping serving the area is approximately 9,000 LF of 4-inch water main and 5,450 LF of 6-inch water main. This project will replace 3,140 LF of 4-inch piping with 8-inch piping along 6th Avenue and Haugen Street. The new piping will serve as a "backbone" for the area and increase fire flow availability. The budget will be divided between three separate years: 2015 ($530,000), 2016 ($220,000), and 2019 ($330,000).

D-2: Viking Avenue PRV (2015)

Estimated Project Cost: $220,000

The Viking Ave water main currently has very high pressures (180 psi) that need to be reduced. High pressure in the main has caused pipes to burst several times. The City plans to install two PRV systems, including one at the old Viking Avenue Booster station site, to reduce pressure along this main.

D-3: Hostmark Transmission Main (2016)

Estimated Project Cost: $500,000

The City plans to install a transmission main between the Wilderness Park Booster Station (BS-1) and the East High Zone along Hostmark Street. This project will allow the City to transfer supply between the Low and East High Zones to improve supply redundancy to both areas. The project consists of approximately 3,000 LF of 12-inch water main along Hostmark Street. A new pressure reducing valve station will be installed to transfer supply from the East High Zone to the Middle Zone.

D-4: Hostmark Distribution Main (2016)

Estimated Project Cost: $600,000

The City plans to replace the transmission main from Caldart Avenue to the west side of SR 305 and Front Street along Hostmark Street. The existing water main is undersized and limits the flow to and from the reservoir. This project will result in an increase in available fire flow to the Low Zone and improved water quality in the area around the reservoir.

The project consists of 2,200 LF of 12-inch water main on Hostmark from the Caldart Avenue to SR 305 and an additional 1,500 LF from SR 305 to Front Street.

D-5: SR 305 Crossing (2018)

Estimated Project Cost: $200,000

The City plans to replace the transmission main that crosses SR 305 at Hostmark. The existing water main is an old and undersized pipe that serves the downtown area.

D-6: Liberty Ridge Fire Flow (2019)

Estimated Project Cost: $100,000

The Liberty Ridge Apartments require a minimum of 2,500 gpm for fire flow. They are at a higher elevation than most of the Low Zone and are served by 6-inch piping from the south. An additional 8-inch pipe from Bond Road to 1st Avenue NE at the south end of the complex would loop the service and increase fire flow to above 2,500. This improvement would maintain adequate fire flow beyond 2034.

D-7: Water Main Replacement Program (2020-2024)

Estimated Project Cost: $250,000

The City has schedule specific water main replacements for the next 6 years and will continue replacing aging water mains annually beyond the 6-year timeframe. Which mains will be replaced beyond what is currently scheduled will depend on the needs of the system and the known pipe conditions at that time. To show the City is dedicated to increasing the reliability of the system and reducing DSL by replacing leaky water mains, the City has allocated $250,000 per year for main replacement beyond 2020.

MISCELLANEOUS PROJECTS

M-1: Meter Upgrade and Replacement Program (2015-2016)

Estimated Project Cost: $350,000

The City plans to replace all existing meters in their water system. The new meters with have remote read capability and will be a higher quality magnetic meter. This project is intended to help reduce water loss and improve the efficiency of the water system. The meter replacement efforts will be split between 2015 and 2016 so $175,000 is allocated to the capital improvements for each year.

M-2: Telemetry System Upgrades (2015)

Estimated Project Cost: $50,000

The City plans to replace the current telemetry system. This project will upgrade the central control system so that the City will have better remote operation of its water and sewer facilities.

M-3: Public Works Complex (2017)

Estimated Project Cost: $6,887,000
Estimated Water Utility Cost: $1,173,000

The City plans to construct a Public Works Complex which will provide a maintenance and operations center for the water, sanitary sewer, storm sewer, solid waste, roads, and parks departments. This project will be financed through utility reserve funds ($550,000), land sales ($1,023,000), and bond issuance ($5,314,000 over 15 years). The water utility is expected to fund 20 percent of the project cost, excluding revenue generated through land sales. The water utility plans on taking a loan to fund their portion of the complex. This loan will add $80,000 a year to debt service starting in 2017.

M-4: Water System Plan Extension (2020)

Estimated Project Cost: $20,000

The City has budgeted for revisiting the assumptions made in the 2014 WSP in hopes of gaining a 4-year extension to this Plan.

M-5: Water System Plan Update (2024)

Estimated Project Cost: $75,000

The City has budgeted for updates to the Water System Plan and hydraulic model software.

SUMMARY OF CAPITAL IMPROVEMENTS

A prioritization schedule and cost summary for the capital improvements are shown in Table 9-1. All costs are in 2014 dollars and relative to the Engineering News Record Construction Cost Index (CCI) of 9,800. Cost estimates for the City's projects are included in Appendix I.

TABLE 9-1

Capital Improvement Plan

No.	Project Name	Year	Estimated Cost[1]
WS-1	Pugh Well/Lincoln Wells No. 1 and No. 2 Mn Treatment	2014	$200,000
WS-1	Pugh Well/Lincoln Wells No. 1 and No. 2 Mn Treatment	2015	$600,000
D-1	Old Town District Main Replacement	2015	$530,000
D-2	Viking Avenue PRVs	2015	$220,000
M-1	Meter Upgrade and Replacement Program	2015	$175,000
M-2	Telemetry System Upgrades	2015	$50,000
D-3	Hostmark Transmission Main	2016	$500,000
D-4	Hostmark Distribution Main	2016	$600,000
ST-1	Wilderness Park Reservoir Repairs	2016	$80,000
M-1	Meter Upgrade and Replacement Program	2016	$175,000
D-1	Old Town District Main Replacement	2016	$220,000
ST-2	Raab Park Reservoir Replacement	2017	$80,000
WS-2	West Side Well Treatment	2017	$150,000
ST-1	Wilderness Park Reservoir Repairs	2017	$420,000
M-3	Public Works Complex	2017	$1,173,000[2]
WS-3	Long Term Water Supply Study	2017	$30,000
ST-2	Raab Park Reservoir Replacement	2018	$600,000
WS-2	West Side Well Treatment	2018	$450,000
BS-1	Wilderness Park Booster Station Replacement	2018	$500,000
D-5	SR 305 Crossing	2018	$200,000
ST-3	Recoat Finn Hill Tank	2018	$300,000
D-6	Liberty Ridge Apts. Fire Flow	2019	$100,000
D-1	Old Town District Main Replacement	2019	$330,000
ST-3	Recoat Olhava Tank	2020	$300,000
M-4	Water System Plan Extension	2020	$20,000
D-7	Water Main Replacement Program	2020	$250,000
6-Year Subtotal			**$8,253,000**
BS-2	340 Zone Fire Flow Pump	2021	$250,000
D-7	Water Main Replacement Program	2021	$250,000
WS-4	Big Valley Well No. 3	2022	$450,000
D-7	Water Main Replacement Program	2022	$250,000
WS-5	West Side Well No. 2	2023	$412,000
D-7	Water Main Replacement Program	2023	$250,000
M-5	Water System Plan Update	2024	$75,000
D-7	Water Main Replacement Program	2024	$250,000
WS-6	Acquire New Water Rights or Supply Capacity	Beyond 2024	TBD
20-Year Total			**$10,440,000**

(1) In 2014 dollars; CCI = 9800.
(2) Public Works Complex will be funded by a loan.

System wide model results after improvements are included in Appendix D. The improved fire flow results are also shown in Table 4-8.

CHAPTER 10

FINANCIAL ANALYSIS

INTRODUCTION

This chapter contains an analysis of the City's ability to meet future operating expenses and fund water improvements outlined in the previous chapters. Potential funding sources, financial status of the water utility, funding required to finance the scheduled improvements, and the impact of water system improvements on water rates are presented.

The City operates a combined water and wastewater utility, but the analysis presented in this chapter is specific to the water utility. All revenues and expenses known to be associated with the water system are fully included in the analysis.

FINANCIAL STATUS OF EXISTING WATER UTILITY

CURRENT WATER RATES

The City's water rates are defined in Poulsbo Municipal Code (PMC) 3.12.100 for the year 2014. Per PMC 13.70.520, water rates are adjusted every January based on the Consumer Price Index for Urban Consumers, U.S. City Average. For billing purposes, customers are classified into one of six categories as follows:

Customer Class 1 – Single-Family Residential
Customer Class 2 – Low Income Senior
Customer Class 3 – Multi-Family Residential
Customer Class 4 – Commercial
Customer Class 5 – Irrigation
Customer Class 6 – Outside City Limits

The base rates for each customer class is dependent upon the installed meter size. Single-family and low income senior customers are limited to a 3/4-inch meter and other customers may have a range of meter sizes depending on their water use. Table 10-1 provides the base rate for 2014 for all customer classes and meter sizes.

TABLE 10-1

2014 Water Base Rates

Meter Size	Single-Family	Low Income Senior	Multi-Family	Commercial	Irrigation	Outside City Limits
3/4"	$11.64	$11.64	$11.96	$12.40	$9.66	$17.45
1"	N/A	N/A	$26.74	$27.84	$20.99	$38.90
1-1/2"	N/A	N/A	$51.12	$53.31	$45.50	$74.24
2"	N/A	N/A	$80.98	$84.49	$62.54	$117.55
3"	N/A	N/A	$165.62	$172.59	$128.72	$240.58
4"	N/A	N/A	$254.91	$265.83	$197.25	$370.11
6"	N/A	N/A	$501.69	$523.47	$386.38	$728.00
8"	N/A	N/A	$797.39	$832.28	$612.93	$1,156.87

In addition to the base charge, the customers also pay a commodity charge for the water metered. During the winter period, October through May, all usage is billed at a uniform rate within each customer class. During the summer period, June through September, the commodity charge changes. Single-family and low income senior customer classes are billed the same winter rate for water that is metered below 1,000 cf per month (250 gpd) and are billed a high rate for usage above the 1,000 cf threshold. Multi-family, commercial, irrigation, and outside city customers pay a higher rate for all metered usage during the summer period. Table 10-2 provides the commodity charges for 2014 for all customer classes.

TABLE 10-2

2014 Commodity Charges

Customer Class	October – May, All Usage	June – September, 0-1,000 cf	June – September, 1,000 cf and Greater
Single-Family	$1.80/ccf	$1.80/ccf	$2.81/ccf
Low Income Senior	$1.52/ccf	$1.52/ccf	$2.81/ccf
Multi-Family	$1.52/ccf	$2.30/ccf	$2.30/ccf
Commercial	$1.52/ccf	$2.30/ccf	$2.30/ccf
Irrigation	$1.52/ccf	$2.30/ccf	$2.30/ccf
Outside City Limits	$2.30/ccf	$3.36/ccf	$3.36/ccf

SYSTEM PARTICIPATION FEES

New customers are required to pay fees to offset the costs paid by existing customers and costs paid by the City to extend service to the new customer. All customers seeking new or expanded service must pay a general facility fee of $2,305 per ERU. The general facility fee, calculated by a financial consultant, is a way to recoup costs paid by existing

customers and pre-paying for new facility construct needed to accommodate future customers. If the City installs or funds the installation of a water main to the new customer, a front footage fee may be assessed. Additional fees include a $36 inspection fee and $20 new account fee. Table 10-3 provides the general facility fees and service meter fees for all meter sizes. The City is planning to reevaluate the general facility fee. Many neighboring systems have fees that are double or more than double the City's current fee. Anticipating a rise in the general facility fee, the connection charges forecast in 2015 and beyond will be $4,000 per ERU, which is based on some preliminary calculations and is a conservative estimate when comparing it to similar neighboring systems.

TABLE 10-3

System Participation Fees

Meter Size	General Facility Fee	Meter Cost	City-Installed Connection
3/4-inch	$2,305	$130	$1,500
1-inch	$5,763	$200	$1,580
1-1/2-inch	$11,525	$450	$2,190
2-inch	$18,440	$620	$2,425

HISTORICAL FINANCIAL OPERATIONS

Water utility operating revenues and expenditures for the years 2008 through 2013 are summarized in Table 10-4. The City has seen an increase in the amount of revenue it has received from water rates during the last 2 years. From the past financial data, an estimate of 2014 revenues and expenses has been calculated for use in the projections presented later in the chapter. The 2014 revenue is set by the average sales per hundred cubic feet of the last 3 years and the project water consumption in 2014. Maintenance and customer service expenses have been relatively steady, whereas administration and operations expenses have risen. The baseline budget column is either set by the average of the last 3 years or the most recent value. A baseline value is not provided for debt service since these future payments are more precisely known and will be used in the projections.

TABLE 10-4

Historical Operating Revenues and Expenditures

Operating Revenue	2008	2009	2010	2011	2012	2013
Water Sales	$1,222,497	1,342,192	$1,315,346	$1,313,739	$1,362,066	$1,420,797
Miscellaneous	$112,705	$106,216	$104,420	$104,567	$108,050	$109,526
Total Operating Revenue	**$1,335,202**	**$1,448,408**	**$1,419,766**	**$1,418,306**	**$1,470,117**	**$1,530,323**
Operating Expenditures	**2008**	**2009**	**2010**	**2011**	**2012**	**2013**
Operations	$521,891	$554,447	$539,379	$655,060	$666,196	$731,608
Interfund Services	$745,474	$315,630	$313,678	$292,767	$302,516	$220,870
Depreciation	$304,972	$314,611	$321,100	$333,839	$380,230	$379,766
Debt Service	$123,053	$121,724	$120,582	$121,107	$121,730	$120,089
Total Operating Expenses	**$1,695,389**	**$1,306,411**	**$1,294,740**	**$1,402,774**	**$1,470,671**	**$1,452,332**
Net Revenue	($360,187)	$141,996	$125,026	$15,532	($555)	$77,990

PROJECTED REVENUES AND EXPENSES

Table 10-4 shows the baseline data upon which the projections developed below are based. Forecast factors used in determining the projections are shown in Table 10-5. Table 10-6 and 10-7 presents the projected operating revenues and expenses for the water utility. Poulsbo Municipal Code (PMC) 13.70.520 allows an annual rate adjustment based on the consumer price index. The City plans on a one-time rate increase of 13 percent in 2015. After 2015, an annual rate increase of 2 percent is applied to future water sales in addition to the anticipated increase in production.

TABLE 10-5

Forecast Factors

Forecast Factors	Value
Annual Rate Increase(1)	2.0%
General Inflation Rate	3.0%

(1) Per PMC 13.70.520, rates can be adjusted every year based on the consumer price index. A 2 percent rate increase is used for estimating this rate increase in future years.

A water sales value per hundred cubic feet was determined based on the production and water sales from the previous 3 years. These 3 years of water sales values were averaged and used to project revenue in the future. The projected production in the future is from Chapter 6 and accounts for the WUE measures and projected savings. The water sales value is adjusted based on the annual rate increase for future years. The miscellaneous revenue is based on the 3-year average and adjusted for inflation each year.

The projected operating expenditures are presented in Table 10-7. The 2014 values for Operations, Interfund Services, and Depreciation are based on 3-year averages. Debt Service is known for future years so the exact values are reported. Transfer from operations is the remaining operating revenue after the operation expenses and current debt payments have been met. This value is shown independently in Table 10-8. Depreciation is a budgeted annual expense set aside to be used for capital improvements.

Table 10-6 also presents the projected connection charge revenues. The connection charges are based on the number of new ERUs expected in the system. The ERU projections are based on growth presented in Chapter 2. To be conservative, the connection charge revenue is reduced by 25 percent.

Capital Revenue is the money available for capital improvement projects. The net operating revenue, new connection charges, and budgeted depreciation combine to fund projects to upgrade and expand the water system.

TABLE 10-6

Projected Operating Revenues

Year	Water Sales (1)	Miscellaneous(2)	Total Operating Revenue	Transfer from Operations(3)	Connection Charge Revenue(4)	Depreciation(5)	Total Capital Revenue(6)
2014	$1,585,000	$107,000	$1,692,000	$247,000	$197,000	$365,000	$809,000
2015	$1,796,000(1)	$110,000	$1,906,000	$221,000	$360,000	$376,000	$957,000
2016	$1,836,000	$113,000	$1,949,000	$219,000	$366,000	$387,000	$972,000
2017	$1,876,000	$116,000	$1,992,000	$133,000	$377,000	$399,000	$909,000
2018	$1,918,000	$119,000	$2,037,000	$237,000	$389,000	$411,000	$1,037,000
2019	$1,960,000	$123,000	$2,083,000	$232,000	$399,000	$423,000	$1,054,000
2020	$1,997,000	$127,000	$2,124,000	$220,000	$356,000	$436,000	$1,012,000
2021	$2,075,000	$131,000	$2,206,000	$261,000	$366,000	$449,000	$1,076,000
2022	$2,157,000	$135,000	$2,292,000	$292,000	$377,000	$462,000	$1,131,000
2023	$2,242,000	$139,000	$2,381,000	$324,000	$382,000	$476,000	$1,182,000
2024	$2,327,000	$143,000	$2,470,000	$354,000	$356,000	$490,000	$1,200,000

(1) The account is projected using forecasted water consumption with an annual 2 percent rate increase and a one-time 13 percent rate increase in 2015.
(2) The account is projected using the forecast factor General Inflation Rate.
(3) Difference between operating revenue and operating expenses from Table 10-8.
(4) Based on connection fee of $4,000/ERU and ERU growth projections in Chapter 2.
(5) Depreciation "operating expenses" are set aside to be used for capital projects.
(6) Sum of Transfer from operations, depreciation, and connection charge revenue.

TABLE 10-7

Projected Operating Expenditures

Year	Operations(1)	Interfund Services(1)	Debt Service(2)	Depreciation(1)	Total Operating Expenses
2014	$684,000	$272,000	$124,090	$365,000	$1,445,000
2015	$905,000(3)	$280,000	$123,517	$376,000	$1,685,000
2016	$932,000	$288,000	$122,837	$387,000	$1,730,000
2017	$960,000	$297,000	$202,931(4)(5)	$399,000	$1,859,000
2018	$989,000	$306,000	$94,429	$411,000	$1,800,000
2019	$1,019,000	$315,000	$94,032	$423,000	$1,851,000
2020	$1,050,000	$324,000	$93,635	$436,000	$1,904,000
2021	$1,082,000	$334,000	$80,000	$449,000	$1,945,000
2022	$1,114,000	$344,000	$80,000	$462,000	$2,000,000
2023	$1,147,000	$354,000	$80,000	$476,000	$2,057,000
2024	$1,181,000	$365,000	$80,000	$490,000	$2,116,000

(1) The account is projected using the forecast factor General Inflation Rate.
(2) Actual debt payments are known for future years.
(3) A one-time increase of $200,000 occurs in 2015 because of planned hiring.
(4) The Public Works Complex will be financed by an $80,000 per year loan starting in 2017.
(5) A PWTF debt expires after 2017.

Table 10-8 shows the projected operating cash flow for the water utility. Based on current projections, the City will have adequate revenue to cover its operation and maintenance budget and cover its existing and future debt obligations. The remainder if this budget will be added to the fund for capital improvement projects.

TABLE 10-8

Summary Projected Operating Cash Flow

Year	(+) Total Operating Revenues(1)	(-) Total Operation and Maintenance(2)	Net Operating Revenue
2014	$1,692,000	$1,445,000	$247,000
2015	$1,906,000	$1,685,000	$221,000
2016	$1,949,000	$1,730,000	$219,000
2017	$1,992,000	$1,859,000	$133,000
2018	$2,037,000	$1,800,000	$237,000
2019	$2,083,000	$1,851,000	$232,000
2020	$2,124,000	$1,904,000	$220,000
2021	$2,206,000	$1,945,000	$261,000
2022	$2,292,000	$2,000,000	$292,000
2023	$2,381,000	$2,057,000	$324,000
2024	$2,470,000	$2,116,000	$354,000

(1) Total Operating Revenue for the water utility is from Table 10-6.
(2) Total Operating Expenses for water utility is from Table 10-7.

PROJECTED CAPITAL EXPENDITURES

Table 10-9 presents the CIP projects listed in Chapter 9. Many of the project costs and order in Table 10-9 have been provided by the City's engineers. The costs from Chapter 9 have been adjusted for inflation in the table below

TABLE 10-9

Projected Capital Expenditures

No.	2014	2015	2016	2017	2018	2019	2020
WS-1	$200,000	$618,000					
D-1		$546,000	$233,000			$380,000	
D-2		$227,000					
M-1		$180,000	$186,000				
M-2		$52,000					
D-3			$530,000				
D-4			$636,000				
ST-1			$85,000	$458,000			
ST-2				$87,000	$672,000		
WS-2				$164,000	$504,000		
M-3(3)				Loan(3)			
WS-3				$33,000			
BS-1					$560,000		
D-5					$224,000		
ST-3					$336,000		$354,000
D-6						$115,000	
M-4							$24,000
D-7							$295,000
Total	**$200,000**	**$1,623,000**	**$1,670,000**	**$742,000**	**$2,296,000**	**$495,000**	**$673,000**

(1) Capital projects for the 6-Year planning period are listed in Table 9-1.
(2) Annual inflation of 3 percent included in years beyond 2014.
(3) The Public Works Complex will be funded by a loan and is included in debt services starting in 2017.

Table 10-10 provides a summary of the projected water utility cash flow for the next 6 years. Based on the current water utility status and the projected growth within the system, the City should be able to adequately fund its capital improvement plan in addition to its operations budget.

TABLE 10-10

Projected Capital Cash Flow Summary

Year	Start of the Year Cash(1)	Capital Revenue(2)	Capital Expense(3)	End of Year Cash
2014	$2,152,807	$809,000	$200,000	$2,762,000
2015	$2,762,000	$957,000	$1,623,000	$2,096,000
2016	$2,096,000	$972,000	$1,670,000	$1,398,000
2017	$1,398,000	$909,000	$742,000	$1,565,000
2018	$1,565,000	$1,037,000	$2,296,000	$306,000
2019	$306,000	$1,054,000	$495,000	$865,000
2020	$865,000	$1,012,000	$673,000	$1,204,000
2021	$1,204,000	$1,076,000	$606,000	$1,674,000
2022	$1,674,000	$1,131,000	$868,000	$1,937,000
2023	$1,937,000	$1,182,000	$841,000	$2,278,000
2024	$2,278,000	$1,200,000	$423,000	$3,055,000

(1) The 2014 Start of the Year Balance is the 2013 End of Year Balance plus the depreciation and net revenue from 2013.
(2) From the Revenue Table 10-6.
(3) From Capital Expense Table 10-9.

SUMMARY

The system has adequate revenue to complete system upgrades to increase reliability and quality of service to its customers. If revenue projections are less than projected due to decreased water consumption or slower than expected growth, the City has several options for funding the CIPs, including pursuing loans, issuing revenue bonds, increasing GFCs, and/or increasing rates. Additionally, some projects included in the CIP are necessary to accommodate future customers. If system growth is delayed, these projects may also be delayed or modified.

APPENDIX A

PROJECT SUBMITTAL FORMS AND CORRESPONDENCE LETTERS

Water System Plan Submittal Form

This form must be completed and submitted along with the Water System Plan (WSP). It will expedite review and approval of your WSP. **All water systems should contact their regional planner before developing any planning document for submittal.**

City of Poulsbo	691506	City of Poulsbo
1. Water System Name	PWS ID# or Owner ID#	System Owner Name
Keith Svarthumle	360-697-3519	Water System Manager
Contact Name for Utility	Phone Number	Title
200 NE Moe Street	Poulsbo	Washington 98370
Contact Address	City	State Zip
Russell Porter	206-284-0860	Professional Engineer
2. Project Engineer	Phone Number	Title
701 Dexter Ave N. Suite 200	Seattle	Washington 98109
Project Engineer Address	City	State Zip
3. Billing Contact Name (required if not the same as #4)	Billing Phone Number	Billing Fax Number
Billing Address	City	State Zip

4. How many services are presently connected to the system? 5692 ERUs
5. Is the system expanding? (seeking to extend service area or increase number of approved connections) ☐ Yes ☒ No
6. If number of services is expected to increase, how many new connections are proposed in the next six years? 749 ERUs
7. If the system is private-for-profit, is it regulated by the State Utilities and Transportation Commission? ☐ Yes ☒ No
8. Is the system located in a Critical Water Supply Service Area (i.e., have a Coordinated Water System Plan)? ☐ Yes ☒ No
9. Is the system a customer of a wholesale water purveyor? ☐ Yes ☒ No
10. Will the system be pursuing additional water rights from the State Department of Ecology in the next twenty years? ☐ Yes ☒ No
11. Is the system proposing a new intertie? ☐ Yes ☒ No
12. Do you have projects currently under review by the Department of Health? ☒ Yes ☐ No
13. Are you requesting distribution main project report and construction document submittal exception, and if so, does the WSP contain standard construction specifications for distribution mains? ☐ Yes ☒ No
14. Are you requesting distribution related project report and construction document submittal exception, and if so, does the WSP contain distribution facilities design and construction standards, including internal engineering review procedures? ☐ Yes ☒ No
15. The purveyor is responsible for sending a copy of the WSP to adjacent utilities for review or a letter notifying them that a copy of the WSP is available for their review and where the review copy is located. Has this been completed? ☒ Yes ☐ No
16. The purveyor is responsible for sending a copy of the WSP to all local governments within the service area. (County and City Planning Departments, etc). Has this been completed? ☒ Yes ☐ No
17. Are you proposing a change in the place of use of your water right? ☐ Yes ☒ No

If answer to questions 7,8, 11, 15and/or 16 is "yes," list who you sent the WSP to: Kitsap County Public Health Department, Kitsap County PUD, Skookum Ranch Water System, Viewside Community Water System

Is this plan: ☒ an Initial Submittal ☐ a Revised Submittal

Please enclose the following number of copies of the WSP:

3 copies for Northwest and Southwest Regional Offices **OR 2** copies for Eastern Regional Office (We will send one copy to Ecology)
1 additional copy if you answered "yes" to question 7. 3 Total copies attached

Please return completed form to the Office of Drinking Water regional office checked below.

☒ **Northwest Drinking Water Operations**	☐ **Southwest Drinking Water Operations**	☐ **Eastern Drinking Water Operations**
Department of Health	**Department of Health**	**Department of Health**
20425 72nd Avenue South, Suite 310	**PO Box 47823**	**16201 East Indiana Avenue Suite 1500**
Kent, WA 98032-2358	**Olympia, WA 98504-7823**	**Spokane Valley, WA 99216**
(253) 395-6750	**(360) 236-3030**	**(509) 329-2100**

If you need this publication in an alternate format, call (800) 525-0127. For TTY/TDD, call (800) 833-6388.

Water System Plan (WSP) Checklist

	√Required	Content Description	WSP Page #
Chapter 1		**Description of Water System**	
	(√)	Updated WFI, signed and dated	App. B
	(√)	Ownership and management	
	(√)	System history and background	1-1
	(√)	Inventory of existing facilities	1-2
	(√)	Description of and discussion about related plans: CWSP, groundwater management, basin and City/County land use plans & zoning.	1-14
	(√)	Service Area Maps: clearly identifying existing, retail and future service areas.	Fig. 1-2
	(√)	Policies: Service area, conditions of service, annexation	1-3
	(√)	Duty to serve requirement: procedures, conditions, appeals	1-17
	(√)	Consistency from local planning agency (LGC checklist)	App. A
Chapter 2		**Basic Planning**	
	(√)	Demand analysis based on water use • Include analysis of population, service connections & ERUs • Source and service meter data (preferably three or more, typically 6 years). Provide monthly and annual production and consumption totals. • Provide usage by customer class. Analyze industrial and commercial demands separate from the residential demand and multifamily structures separate from the single family residences. • Define ERU • Provide data and assumptions (including DSL) for calculating MDD, PHD and ADD • Demand analysis per pressure zone and the whole system • Consider also water supplied to other systems • If >1000, also include seasonal variations in consumption by customer class	2-2
	(√)	Provide 6 & 20 year projections for population, service connections, & ERUs • Provide 6 & 20 year projections for demand forecasts with and without expected efficiency savings (conservation)	2-13 6-10
	(√)	Interties – discussion of all existing and proposed interties and copies of agreements	App. B
	(√)	Provide 6 & 20 year projections for land use and zoning	2-14
	(√)	Distribution System Leakage percentage and volume	2-8
Chapter 3		**System Analysis**	
	(√)	Provide assumptions and basis of analysis • System design standards • Policies on operations and expected level of service (such as standby storage, pumping restrictions and emergency back-up power) • Fire flow requirements and if nesting is allowed. May need a confirmation from the local fire authority.	3-1
	(√)	System inventory and description	Chp. 1
	(√)	Capacity analysis (legal and physical capacity) • Limiting factor analysis (WSDM worksheet 6-1) • Analysis per pressure zone and the whole system • Water rights analysis- include water right self-assessment forms for existing, 6 & 20-year projections, including copies of water right certificate(s) • consider source, pumping, treatment, storage, and distribution • Summary of system deficiencies	 3-4 3-9 App. B & C 3-16 3-17
	(√)	Analysis of possible improvement projects	Chp. 9
Chapter 4		**Hydraulic Analysis**	
	(√)	Hydraulic analysis of distribution system. • Describe the model used • Evaluate the system based on PHD and MDD + Fire flow • Evaluate the current conditions, and 6- and 20-year planning periods	Chp. 4

DRAFT

		• Check minimum pressures and maximum velocities • Include assumptions of model, pressure zone boundary conditions, and a summary of model input information. Storage assumptions should be based on minimum reservoir levels. • Include verification and calibration methods and results.	
Chapter 5		**Water Quality**	
	(√)	Analysis and discussion of Water Quality	Chp. 5
	(√)	Water quality sampling procedures & program	App. F
Chapter 6		**Water Use Efficiency Program**	
	(√)	Water Use Efficiency (WUE) Program per WAC 246-290-810 • Describe the current WUE program • Describe WUE goal & document public adoption process • Describe measures that will be implemented to achieve the goal & include schedule & costs in the budget • Describe process used to evaluate the WUE measures you did not implement • Describe yearly consumer education • Estimate projected water savings from selected measures • Describe process that will be used to determine effectiveness of the program ≥ 1000 Connections • Estimate water saved from efficiency measures over the past 6 years • Quantitative evaluation of measures to determine if they are cost-effective, include marginal costs of water production • Evaluate measures for cost-effectiveness if shared with other systems • Quantitative or qualitative evaluation of measures to determine if they are cost-effective from the societal perspective	Chp. 6
	(√)	Source & Service Meters - or schedule w/activities to minimize leakage	6-5
	(√)	Water supply characteristics, description & discussion on effect of water use	6-7
	(√)	Source of supply analysis and evaluation of supply alternatives	6-10
	(√)	≥1,000 connections explore reclaimed water opportunities✯	6-8
Appendix F		**Source Water Protection**	
	(√)	Wellhead protection program 2 year update (contaminant inventory, letters and map)	Appendix C
Chapter 7		**Operation and Maintenance Program**	
	(√)	Water system management and personnel	7-1
	(√)	Operator certification	7-3
	(√)	Routine operating procedures and preventive maintenance	7-4, 7-6
	(√)	Coliform monitoring plan , including maps (and triggered source monitoring plan)	App. F
	(√)	Emergency response plan • Water system contacts • Vendor Contacts (Equipment replacement, water haulers, etc.) • Example notices (water outages, BWA, coliform MCL, emergency conservation) • Emergency government officials contact info (ODW, TCEH, State and County Emergency Operations Centers) • List of emergency sources and interties • Emergency response planning activities to ensure preparedness	7-6
	(√)	Water shortage plan and service reliability per WAC 246-290-420	7-10
	(√)	Cross-connection control program	7-11
	(√)	Recordkeeping, reporting, and customer complaint program	7-11
	(√)	Summary of O&M deficiencies	7-2
Chapter 8		**Distribution Facilities Design and Construction Standards**	
	(√)	Standard construction specification for distribution mains	App. D
Chapter 9		**Improvement Program**	

	(√)	Capital improvement schedule for 6 and 20 years	9-7
Chapter 10		**Financial Program**	
	(√)	≥1000 connections – Balanced 1-year budget	10-4
	(√)	Show revenue and cash flow stability to fund capital and emergency improvements	10-4
	(√)	Affordable rate structure that covers the full cost of producing, treating, storing and distributing water to customers now and into the future	10-2
		Miscellaneous Documents	
	(√)	Meeting of the consumers (may be combined with WUE public meeting).	
		• Date, agenda, meeting minutes	App. A
	(√)	County/Adjacent Utility Correspondence	App. A
	(√)	≥1000 connections - State Environmental Policy Act (SEPA) Determination	App. G
	(√)	Agreements: franchise, wheeling, mutual aid, inter-local and other agreements (if any exist)	App. B

The current plan is well written and many sections may only need to be updated with new information. Any sections that remain current do not need to be updated and can be transferred, as such, into the new plan. The checklist includes all items that need to be in a plan. Your existing plan includes most of them.

Based on review of the current plan and our discussion during the pre-plan meeting, the focus of this update should be the following: Demand Analysis and Projections, Capacity Analysis, Capital Improvement program, and Budget.

Below is a summary of our meeting and the specifics that we discussed.

- The new source on Lincoln Road will need to be approved to be included in the analysis; the approval needs to include treatment design as well.
- The new intertie with the PUD needs to be approved. This can be accomplished as part of the WSP update. For submittal requirements, please see WAC 246-290-132.
- If the City has any plans to consolidate any other systems into theirs, this needs to be discussed in the plan.
- If the service area remains outside city limits, the City will need to obtain Local Government Consistency from the County and the City.
- If the City would like to obtain unspecified designation, they will need to show they have adequate capacity including water rights for the six-year planning period.
- Demand analysis; actual daily meter records are preferred over approximation.
- Hydraulic analysis; the City can choose not to complete a new analysis as long as justification is provided to explain that the existing analysis is still valid (such as growth projections that have not been met yet the system was shown adequate in the previous analysis).
- Water Quality, this section should include a discussion of the City's water quality and only the rules that apply to your system, including any new or upcoming rules.
- Water Use Efficiency, this needs to be updated to include a discussion of any measures you didn't implement. You will need to hold a public meeting to adopt a new goal.
- Cross Connection Control, this section should include a summary of how the program is being implemented and provide a schedule of what will be implemented in the next six years.
- Wellhead Protection Program needs to include the new source; the inventory, maps and letters should be also updated.
- The coliform monitoring plan should be reviewed to verify it is current with the Ground Water rule requirements including public notification requirements. The City can choose to submit a triggered source monitoring plan as part of the coliform monitoring plan.

PLANNING DEPARTMENT

MEMO

To: Diane Lenius, Assistant City Engineer
From: Karla Boughton, Associate Planner
Subject: 2014 Draft Water System Plan comments
Date: September 16, 2014

I have reviewed the 2014 Draft City of Poulsbo Water System Plan and offer the following comments for your consideration:

1. Executive Summary: We discussed that the executive summary should include a brief discussion on the differences between the 2007 and 2014 water system plans, focusing on the changes in water use/efficiency. These differences result in the City's existing water rights being sufficient for the 20-year planning period.

2. In 2008, the City and KPUD entered into a Memorandum of Understanding regarding the potential future water supply and service. This MOU was incorporated into the 2009 Comprehensive Plan as Appendix B-1, and was used to demonstrate that the City has planned for sufficient water supply for its 20-year planning period to Central Puget Sound Growth Management Hearings Board. If this MOU remains valid, it may warrant being incorporated into the Draft Water System Plan's Appendix.

3. There are a number of slight inaccuracies on pages 2-10 through 2-11that merit notation. The following provides suggested comments and/or edits:

    a. The appropriate household size for the Poulsbo city limit is 2.3. While it did not appear like any population projections relied on a hhs assumption within the city limits, it is worth confirming this with Gary & Osborne.

    b. The "Projected Population" paragraph on page 2-10 should be deleted and revised as follows:

The 6-year and 20-year planning period growth are based upon the City of Poulsbo's GMA total population allocation of 14,808 assigned by Kitsap County through the Kitsap Countywide Planning Policies. A constant annual growth rate from 2014 to 2034 was assumed to project the annual "City Population" depicted in column 1 of Table 2-13.

The portion of the city limits that is outside of the City's water service area, but within its city limits, is served by PUD. The population growth assumption for this area was based upon a land capacity analysis that identified the number of dwelling units vacant and underutilized acreage could support based upon zoned density. The projected number of dwelling units was multiplied by the City's household size of 2.3 to arrive at a projected total population. This population number was then projected out annually from 2014 to 2034, and is included in Table 2-13 as "PUD Served Population."

To project the population growth outside of the city limits and outside of the City's water service area, but within the City's Urban Growth Area, data from the KCCWSP was used. The average number of people per household (2.68) was multiplied by the number of water service connections outside the city limits to find the approximate population. The KCCWSP uses a compound growth rate of 1.35 percent, and this was used to project the annual growth rate until the year 2034. This represents a small area and the population growth is expected to be minimal as illustrated in Table 2-13 "Outside of City Limits Population" column.

To arrive at the expected population growth for the City's water service area, the annual growth projected for the city was reduced by the "PUD Served Population" and the "Outside City Limits Population". The remaining population - "RSA Population" - represents the City's water service area; it is this population growth that will be utilized in the remainder of this Plan in forecasting water usage and capital needs.

c. Revise the footnotes of Table 2-13 as follows:

(1) 20-year planning period population is based upon the 14,808 population forecast allocated to the City by Kitsap Countywide Planning Policies. The remaining years are interpolated annually for the purposes of water system planning.

(2) Delete footnote (2) as the methodology is now explained in the Projected Population text.

4. Projected ERUs: The paragraphs on page 2-11 and 2-12 could be clarified as follows:

<u>The projected ERUs are based upon the RSA population set forth in Table 2-13.</u>

The ERU growth for the 6-year planning period also takes into account the residential and commercial projects that have been approved by the City, but not yet constructed or fully built-out. A number of these residential and commercial projects moved into construction in 2014, indicating a capital investment by the developer and likelihood that the project will be developed. Combined, these are assumed to represent 749 total ERUs and are expected to be constructed within the 6-year planning period.

"~~The City has received requests for water service from multiple developments that plan to build 600 residential units. Many of these requests have been approved and are in construction or will begin the next few years. The City anticipates that all of these additional ERUs will be completed and connected to the system within 5 years. The two largest developments, Olhava and a residential development along Noll Road, are approved but are yet to be completed. This Plan projects 749 total ERUs will be constructed within the 6-year planning period. Commercial development is expected but not at the rate that residential units are being developed~~."

The ERUs ~~for the approved developments~~ to be completed in the 6-year planning period are estimated assuming that each ~~proposed~~ approved but not yet built single-family unit represents one ~~additional~~ ERU. Overall growth in the 6-year planning period inside the RSA is 14 percent including residential and commercial connections. Growth in the 20-year planning period is less certain, but expected to be less than the 6-year growth rate. Actual growth will be monitored and revised as appropriate through the 6-year water system plan update cycle.

5. The GMA planning period extends to 2035. While I understand that the 2014 Draft Water System Plan uses 2034 as its planning period – 20 years as required by the Washington State Department of Health - the difference of one year will need to be reconciled when the water system plan is to be incorporated into the comprehensive plan. An addendum to the water system plan was discussed as an option to ensure consistency with the GMA planning period, but allowing the water system plan to move forward for approval by DOH at this time.

Washington State Department of Health
Division of Environmental Health
Office of Drinking Water

Local Government Consistency Review Checklist

Water System Name: City of Poulsbo PWS ID: 69150

Planning/Engineering Document Title: Water System Plan Plan Date: August 2014

Local Government with Jurisdiction: City of Poulsbo

WAC 246-290-108 Consistency with local plans and regulations:
Consistency with local plans and regulations applies to planning and engineering documents under WAC 246-290-106, 246-290-107, and 246-290-110(4)(b (ii).

1) Municipal water suppliers must include a consistency review and supporting documentation in its planning or engineering document describing how it has addressed consistency with **local plans and regulations**. This review must include specific elements of local plans and regulations, as they reasonably relate to water service as determined by Department of Health (DOH). Complete the table below and see instructions on back.

Local Government Consistency Statement	Page(s) in Planning Document	Yes – No – Not Applicable
a) The water system service area is consistent with the adopted land use and zoning within the applicable service area.	Page 1-3, Figure 1-2	yes
b) The six-year growth projection used to forecast water demand is consistent with the adopted city/county's population growth projections. If a different growth projection is used, provide an explanation of the alternative growth projection and methodology.	Page 2-10, 2-11	yes
c) Applies to cities and towns that provide water service: All water service area policies of the city or town are consistent with the utility service extension ordinances of the city or town.	Page 1-17 to 1-19	yes; PMC 13.14
d) Service area policies for new service connections are consistent with the adopted local plans and adopted development regulations of all jurisdictions with authority over the service area [City(ies), County(ies)].	Page 1-17 to 1-19	yes; PMC 13.14
e) Other relevant elements related to water supply are addressed in the water system plan, if applicable; Coordinated Water System plans, Regional Wastewater plans, Reclaimed Water plans, Groundwater Area Management plans, and Capital Facilities Element of Comprehensive plans.	Page 1-15, 2-1, Chapter 9	yes; consistency will also be assumed w/inclusion of water system plan in City's comprehensive plan.

I certify that the above statements are true to the best of my knowledge and that these specific elements are consistent with adopted local plans and development regulations.

Karla Boughton 9/15/14

Signature Date

Karla Boughton; Associate Planner; City of Poulsbo

Printed Name, Title, & Jurisdiction

Chapter 13.14
UTILITY EXTENSIONS OUTSIDE CITY LIMITS

Sections:

13.14.010 Policy.
13.14.020 Utility extension agreements.
13.14.030 Application.

13.14.010 Policy.

A. The city of Poulsbo does not intend to hold itself out as a public utility generally willing to supply all those who request service for properties outside of the Poulsbo city limits. As a general policy, the city requires that properties annex to the city before utilities are extended.

B. In cases where the city council determines that annexation of a property located within the city's urban growth area is not currently feasible, the council may, in its sole and absolute discretion, allow extension of utility service to the property prior to annexation if the property owner executes an agreement containing all of the provisions set forth in Section 13.14.020 of the Poulsbo Municipal Code.

C. In cases where an owner of property located outside of the city's urban growth area requests extension of utility service, the city council may, in its sole and absolute discretion, allow extension of utility service if the property owner executes an agreement containing all of the provisions set forth in Section 13.14.020 of the Poulsbo Municipal Code and:

1. In the case of water service, where the local health official certifies that water supplied by an existing well or wells serving an existing residence or residences is unsafe to drink or provides insufficient quantity for domestic use and the well is physically incapable of being repaired or replaced in a manner meeting applicable health standards; or

2. In the case of sewer service, where (a) the local health official certifies that an existing septic system or system serving an existing residence or residences has failed and is physically incapable of being repaired or replaced in a manner meeting applicable health standards; (b) extension is shown to be necessary to protect basic public health and safety and the environment; and (c) the sewer services provided by the extension are financially sustainable at rural densities and do not permit urban development; or

3. In the case of both water and sewer service, where service is to be provided solely to publicly owned facilities.

D. Nothing in this section is intended to abrogate any existing utility extension agreements. (Ord. 2006-09 § 1 (part), 2006: Ord. 2002-17 § 1, 2002: Ord. 2002-10 § 1, 2002: Ord. 88-62 § 1 (part), 1988)

13.14.020 Utility extension agreements.

A. In the event that the city council determines, pursuant to Section 13.14.010, to allow extension of utility services beyond the city limits, the owner of the property for which service is authorized must execute a utility extension agreement containing all of the following terms and conditions:

1. A warranty that the owner has title to the property and is authorized to enter into the agreement;

2. A statement specifying the location and line from which service may be extended;

3. An agreement by the owner to pay all costs of designing, engineering and constructing the extension to city standards and according to plans approved by the city public works department;

4. A requirement that the owner secure and obtain, at the owner's sole cost and expense, any necessary permits, easements and licenses to construct the extension;

5. An agreement by the owner to turn over and dedicate any capital facilities, such as main lines, pump stations and wells, to the city upon completion of construction and to furnish as-built plans, any necessary easements, permits or licenses, a bill of sale, and a maintenance guarantee to the city;

6. An agreement by the owner to pay utility connection charges;

7. An agreement by the owner to pay all utility service charges at rates applicable to properties outside the city limits;

8. An agreement by the owner to annex the property to the city at such time as the owner is requested by the city to do so and granting the mayor a power of attorney on behalf of the property to execute any applicable landowner petition necessary for annexation of the property in the event the owner fails or refuses to do so;

9. For properties within the city's urban growth area, a restriction on the use of the property to those uses authorized by the Poulsbo urban growth subarea plan approved by the city and Kitsap County;

10. For properties outside the city's urban growth area meeting the requirements of Section 13.14.010(C) of the Poulsbo Municipal Code, a restriction on the use of the property to those uses authorized by the Kitsap County Comprehensive Plan and zoning code and which do not constitute urban development;

11. A statement that delinquent payments under the agreement will constitute a lien which may be foreclosed in the same manner as other liens for utility service;

12. A statement that the city may terminate service in the event of noncompliance by the owner with any term or condition of the agreement;

13. A waiver of the right to protest formation of a local improvement district for improvements which would benefit the subject property;

14. A clause providing that the agreement may be specifically enforced;

15. A requirement that the agreement be recorded with the Kitsap County auditor and constitute a covenant running with the land receiving service, and providing that all costs of recording the agreement will be paid by the owner;

16. A clause providing for attorney's fees in the event of litigation;

17. A provision allowing the city to deny connection in the event of a lack of capacity at the time connection is to be physically made; and

18. A provision rendering the agreement null and void if connection is not made and service is not extended within two years after the agreement is executed.

B. Any necessary approval by the boundary review board must be received prior to extension of service. Any agreement for which such approval has not been received prior to execution must contain a provision making the extension of service contingent upon receipt of such approval.

C. Upon execution of the agreement and receipt of all approvals, the agreement shall be recorded with the Kitsap County auditor as a covenant running with the land, and all costs of recording shall be paid by the owner in accord with the terms of the agreement. (Ord. 2006-09 § 1 (part), 2006)

13.14.030 Application.

A. Any person desiring to apply for the extension of utility service outside the city limits under the provisions of this chapter shall do so on a form provided by the city. The completed application form, together with a nonrefundable application fee in an amount set by council resolution, shall be submitted to the public works department, and accompanied by:

1. A vicinity map drawn to a scale acceptable to the public works department and specified on the application form, depicting the area for which service is being requested and the existing city facilities from which the extension is proposed to be made; and

2. A legal description of the property to be served by the extension; and

3. A statement of the basis for the extension as provided in Section 13.14.010 of the Poulsbo Municipal Code; and

4. A statement of the nature of the existing and proposed uses of the property and the conformity of such uses with the Poulsbo urban growth subarea plan or county comprehensive plan and zoning code as provided in Sections 13.14.020(A)(9) or (10) of this chapter; and

5. Such other information as the public works director determines to be necessary to properly review the application.

B. The public works director shall review the application and forward the same, together with the director's recommendation, to the city council for review and determination under Section 13.14.010 of this chapter. (Ord. 2006-09 § 1 (part), 2006)

Mobile Version

MEMORANDUM OF UNDERSTANDING

BETWEEN

THE CITY OF POULSBO

AND

SEP 1 1 2008

PUBLIC UTILITY DISTRICT NO. 1 OF KITSAP COUNTY FOR

POTENTIAL FUTURE WATER SUPPLY AND SERVICE TO AREAS OF THE CITY

THIS MEMORANDUM is made and entered into this 20th day of August , 2008, by and between the City of Poulsbo, a municipal corporation, hereinafter referred to as "City" and Public Utility District No. 1 of Kitsap County, hereinafter referred to as "PUD".

WHEREAS, PUD has developed a regional supply of water and has the authority to sell and distribute same to other municipal corporations within or without its limits; and

WHEREAS, the City has a need to acquire additional domestic water supplies and storage in order to meet the needs of the community and its existing and future customers; and

WHEREAS, PUD has a surplus of domestic water supply and storage; and,

WHEREAS, the City limits and the PUD water service areas overlap in certain areas; and

WHEREAS, the City and PUD distribution facilities are intertied; and

WHEREAS, the City and PUD recognize that cooperative utility operations are in the best interests of the citizens of the City of Poulsbo and the surrounding area; and

WHEREAS, the City and the PUD desire to document their mutual understanding of the approach whereby the City and PUD will formalize any future agreements concerning domestic water supply and/or storage ;

NOW, THEREFORE, THE CITY AND THE PUD AGREE AS FOLLOWS:

1. **SCOPE**: Subject to the terms and conditions of this Memorandum, the City and PUD agree to the continuation of discussions regarding the coordination of domestic water supplies, storage, and service areas with the ultimate goal being formalized agreement(s) that are mutually beneficial.

2. SCENARIOS: The City and PUD both acknowledge that there are different approaches that could result in satisfying their shared and individual needs. These scenarios are not mutually exclusive, and it is recognized that any future agreement(s) may include elements of each. These scenarios are briefly described as follows:

> **Scenario 1:** Wholesale purchase of enough water from PUD for the City to meet its future needs.
>
> **Scenario 2a:** A smaller service area boundary adjustment (i.e., Areas within the City limits and Poulsbo Urban Growth Area (UGA) north and west of Urdahl Road) in combination with a smaller wholesale purchase of water from PUD to meet the City's future needs.
>
> **Scenario 2b:** Larger boundary adjustment (i.e., City limits and UGA west of State Highway 3) without the need for a wholesale purchase arrangement.

3. SERVICE AREA BOUNDARY ADJUSTMENT: For the purposes of moving forward with near-term development proposals, Scenario 2a is agreed to as the baseline for future agreements. PUD's current service area encompasses part of this area, and they have infrastructure in this area, while the City currently has none. This area is more clearly defined as all parcels within the West ¼ of Section 10 Township 26N Range 1E North of Finn Hill Road **(see attached map).** This service area adjustment will be done in accordance with procedures set forth in the Kitsap County Coordinated Water System Plan, Regional Supplement, 2005 Revision.

4. DOMESTIC WATER STORAGE: As made feasible by the current intertie arrangement between the City and PUD, and in consideration of the adjustment of service area boundaries discussed above, the City will receive storage credit from PUD's Vinland water system. This will address the City's West High Pressure Zone storage existing deficiency identified in the 2007 Water System Plan of 336,000 gallons and projected deficiency of 998,000 gallons by 2026.

5. BASE SUPPLY: For a period of 12 months following the signing of this MOU, PUD will grant the City first right-of-refusal for purchased domestic water supply for areas served by the City within the current City limits and UGA. The reserved quantity shall be a maximum of 500 acre feet of water per year and maximum peaking at 300 gallons per minute daily domestic flow. If the City elects to exercise this right, a quantity of water – up to the amounts set forth above – will be negotiated between the PUD and the City. These quantities will ensure sufficient supplies of domestic water for the City through the year 2026 according to the 2007 Water System Plan.

6. CAPITAL COSTS: PUD has already made the capital investments necessary to provide the water supply quantities to the City as specified in this memorandum. Any future

capital contributions from the City will be based on fair share of those investments based upon specified quantities in any final agreements.

7. WATER SERVICE RATES: Rates for water service to any areas of the City that are agreed to be served by the PUD by service area boundary adjustments will be specified in subsequent agreement(s).

8. WHOLESALE WATER CHARGE: Charges for supply of any wholesale water from PUD to the City will be specified in subsequent agreement(s).

9. EXECUTION OF DOCUMENTS: This memorandum shall be executed in two counterparts, either of which shall be regarded for all purposes as one original. The parties agree that they will execute any and all deeds, instruments, documents and resolutions or ordinances necessary to give effect to the terms of this memorandum.

Dated: 08-20-2008

City of Poulsbo

Authorized Signature

Mayor
Title

Approved to Form:

City Attorney

Dated: September 9, 2008

Public Utility District No. 1 of Kitsap County

Authorized Signature

President of Board
Title

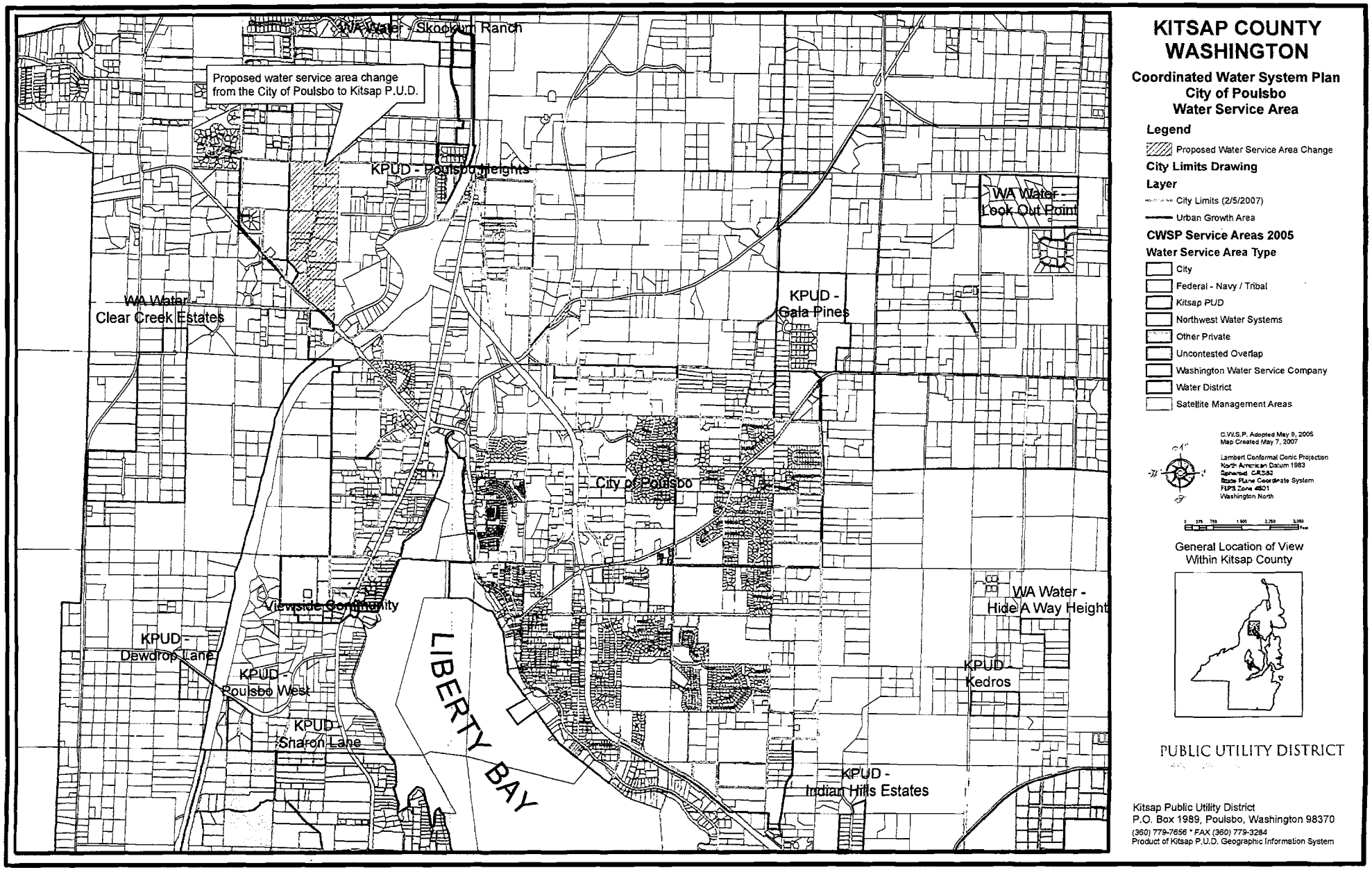
KITSAP COUNTY
WASHINGTON
Coordinated Water System Plan
City of Poulsbo
Water Service Area
Legend
Proposed Water Service Area Change
City Limits Drawing
Layer
City Limits (2/5/2007)
Urban Growth Area
CWSP Service Areas 2005
Water Service Area Type
City
Federal - Navy / Tribal
Kitsap PUD
Northwest Water Systems
Other Private
Uncontested Overlap
Washington Water Service Company
Water District
Satellite Management Areas
C.W.S.P. Adopted May 9, 2005
Map Created May 7, 2007
Lambert Conformal Conic Projection
North American Datum 1983
Spheroid GRS80
State Plane Coordinate System
FIPS Zone 4601
Washington North
General Location of View
Within Kitsap County
PUBLIC UTILITY DISTRICT
Kitsap Public Utility District
P.O. Box 1989, Poulsbo, Washington 98370
(360) 779-7656 * FAX (360) 779-3284
Product of Kitsap P.U.D. Geographic Information System
Proposed water service area change from the City of Poulsbo to Kitsap P.U.D.
WA Water - Skookum Ranch
KPUD - Poulsbo Heights
WA Water - Look Out Point
WA Water - Clear Creek Estates
KPUD - Gala Pines
City of Poulsbo
Viewside Community
WA Water - Hide A Way Height
KPUD - Dewdrop Lane
KPUD - Poulsbo West
KPUD - Sharon Lane
LIBERTY BAY
KPUD - Kedros
KPUD - Indian Hills Estates

Washington State Department of Health

Local Government Consistency Review Checklist

Water System Name: City of Poulsbo PWS ID: 69150

Planning/Engineering Document Title: Water System Plan Plan Date: August 2014

Local Government with Jurisdiction: City of Poulsbo

WAC 246-290-108 Consistency with local plans and regulations:
Consistency with local plans and regulations applies to planning and engineering documents under WAC 246-290-106, 246-290-107, and 246-290-110(4)(b (ii).

1) Municipal water suppliers must include a consistency review and supporting documentation in its planning or engineering document describing how it has addressed consistency with **local plans and regulations**. This review must include specific elements of local plans and regulations, as they reasonably relate to water service as determined by Department of Health (DOH). Complete the table below and see instructions on back.

Local Government Consistency Statement	Page(s) in Planning Document	Yes – No – Not Applicable
a) The water system service area is consistent with the adopted land use and zoning within the applicable service area. (See Response Letter)*	Page 1-3, Figure 1-2	Yes
b) The six-year growth projection used to forecast water demand is consistent with the adopted city/county's population growth projections. If a different growth projection is used, provide an explanation of the alternative growth projection and methodology.	Page 2-10, 2-11	Yes
c) Applies to cities and towns that provide water service: All water service area policies of the city or town are consistent with the utility service extension ordinances of the city or town.	Page 1-17 to 1-19	Yes
d) Service area policies for new service connections are consistent with the adopted local plans and adopted development regulations of all jurisdictions with authority over the service area [City(ies), County(ies)].	Page 1-17 to 1-19	Yes
e) Other relevant elements related to water supply are addressed in the water system plan, if applicable; Coordinated Water System plans, Regional Wastewater plans, Reclaimed Water plans, Groundwater Area Management plans, and Capital Facilities Element of Comprehensive plans.	Page 1-15, 2-1, Chapter 9	Yes

I certify that the above statements are true to the best of my knowledge and that these specific elements are consistent with adopted local plans and development regulations.

Signature Date 9/22/14

Darren Gurnee, Planner 2, Kitsap County
Printed Name, Title, & Jurisdiction

Consistency Review Guidance

For Use by Local Governments and Municipal Water Suppliers

This checklist may be used to meet the requirements of WAC 246-290-108. When using an alternative format, it must describe all of the elements; 1a), b), c), d), and e), when they apply.

For **water system plans (WSP)**, a consistency review is required for the retail service area and any additional areas where a municipal water supplier wants to expand its water right's place of use.

For **small water system management programs**, a consistency review is only required for areas where a municipal water supplier wants to expand its water right's place of use. If no water right place of use expansion is requested, a consistency review is not required.

For **engineering documents**, a consistency review is required for areas where a municipal water supplier wants to expand its water right's place of use (water system plan amendment is required). For non-community water systems, a consistency review is required when requesting a place of use expansion. All engineering documents must be submitted with a service area map per WAC 246-290-110(4)(b)(ii).

A) Documenting Consistency: Municipal water suppliers must document all of the elements in a consistency review per WAC 246-290-108.

1 a) Provide a copy of the adopted **land use/zoning** map corresponding to the service area. The uses provided in the WSP should be consistent with the adopted land use/zoning map. Include any other portions of comprehensive plans or development regulations that are related to water supply planning.

1 b) Include a copy of the **six-year growth projections** that corresponds to the service area. If the local population growth rate projections are not used, provide a detailed explanation on why the chosen projections more accurately describe the expected growth rate. Explain how it is consistent with the adopted land use.

1c) Include water service area policies and show that they are consistent with the **utility service extension ordinances** within the city or town boundaries. This applies to cities and towns only.

1 d) Include all **service area policies** for how new water service will be provided to new customers.

1 e) **Other relevant elements** related to water supply planning as determined by the department (DOH). See Local Government Consistency – Other Relevant Elements, Policy B.07, September 2009.

B) Documenting an Inconsistency: Please document the inconsistency, include the citation from the comprehensive plan or development regulation, and provide direction on how this inconsistency can be resolved.

C) Documenting Lack of Consistency Review by Local Government: Where the local government with jurisdiction did not provide a consistency review, document efforts made and the amount of time provided to the local government for their review. Please include: name of contact, date, and efforts made (letters, phone calls, and e-mails). In order to self-certify, please contact the DOH Planner.

The Department of Health is an equal opportunity agency. For persons with disabilities, this document is available on request in other formats. To submit a request, please call 1-800-525-0127 (TTY 1-800-833-6388).

KITSAP COUNTY DEPARTMENT OF COMMUNITY DEVELOPMENT

Larry Keeton, Director
619 Division Street MS-36, Port Orchard, Washington 98366
Phone: (360) 337-5777 | Fax: (360) 337-4925
Home Page – www.kitsapgov.com/dcd

September 22, 2014

Karla Boughton
City of Poulsbo, Associate Planner
200 NE Moe Street
Poulsbo, WA 98370
(360) 394-9882

Dear Ms. Boughton,

The Kitsap County Department of Community Development (DCD) appreciates the opportunity to review and comment on the City of Poulsbo Draft Water System Plan, dated August 2014. Overall the plan is consistent with the Kitsap County Comprehensive Plan and adopted development regulations, with a few exceptions noted. A resubmittal may be required if changes to the figures require recalculations, as indicated herein.

Fire Flow Analysis:

The plan as written meets the requirement of the law and will provide adequate fire flow into the future provided the improvements suggested in the plan are accomplished.

The following comments for the fire flow analysis are suggestions, not requirements. Most jurisdictions provide fire flow similarly – they adopt the code and apply fire flow requirements as applications for construction are received. This is somewhat of a reactionary method and adds uncertainly for project planning. The city will benefit to identify basic fire flow amounts for different zoning uses and build their system accordingly. For example, establish fire flow thresholds respectively for single family residential zones, commercial zones and industrially zoned areas. Proposed projects which exceed the fire flow thresholds for the zone may then anticipate needed accommodations (building construction, size, installed fire protection) to meet fire flow requirements.

Population Projections:

The Kitsap County Comprehensive Plan was last updated in 2006 followed by a remand in 2012. The required 10 year Comprehensive Plan update is currently in process and will be completed in 2016. Population growth rate projections will change as a result of the update and may necessitate a corresponding future update to the City of Poulsbo Water System Plan.

Figures (Resubmittal may be required):

Below please find the Northern District of Kitsap County Zoning Map. Two inconsistencies are identified with red circles. Please update all figures which show city boundaries to include these two areas and indicate the water system which serves the property.

A resubmittal for approval is not required for this change; however, we request the submittal of a final copy with these changes incorporated.

Please recalculate all pertinent information, if necessary, in the City of Poulsbo Draft Water System Plan if the areas are served by the City of Poulsbo Water System. Should recalculations be required as a result of this change we will require resubmittal of the City of Poulsbo Draft Water System Plan.

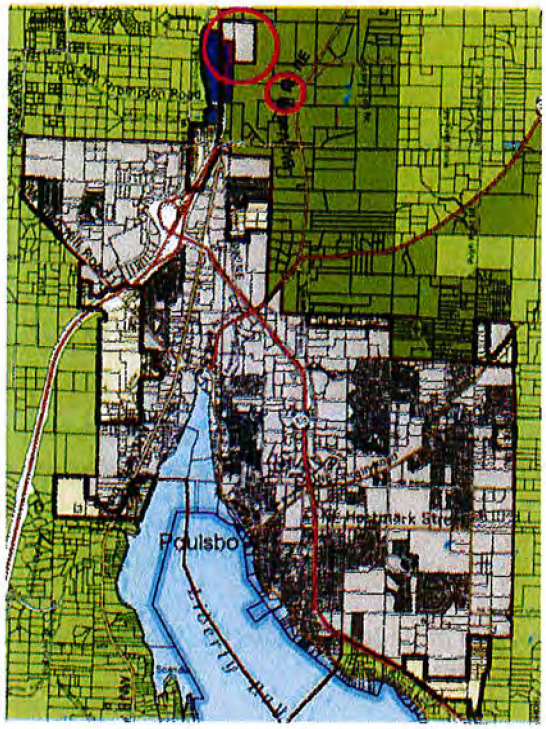

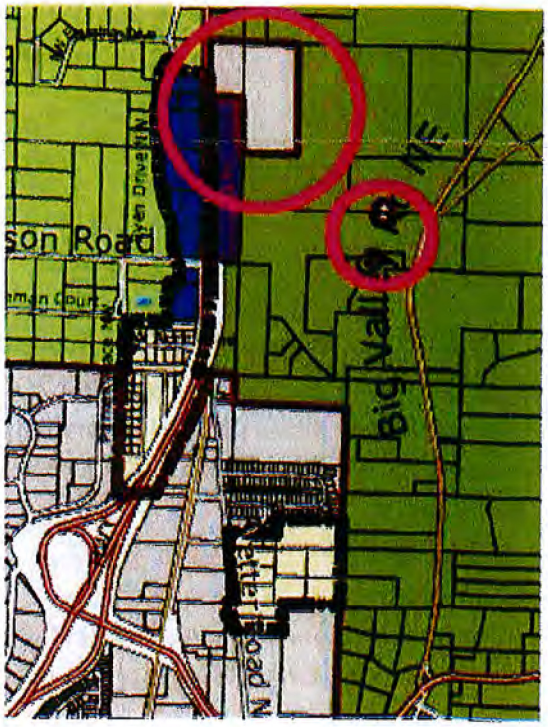

If you have any questions please feel free to contact me at (360) 337-5777, or by email at dgurnee@co.kitsap.wa.us. Thank you for the opportunity to comment on the plan.

9/23/14

Darren Gurnee, Associate Planner
Planning and Environmental Programs Division
Kitsap County Department of Community Development
619 Division St, MS-36
Port Orchard, WA 98366

Enclosure

Cc: Chris Prigmore, Gray & Osborne, Inc.
Corina Hayes, DOH Southwest Regional Office
Shelley Kneip, Kitsap County Deputy Prosecuting Attorney

Gray & Osborne, Inc.
CONSULTING ENGINEERS

August 22, 2014

Mr. Jason Nutsford
Viewside Community Water System
P.O. Box 1989
Poulsbo, Washington 98370

SUBJECT: DRAFT WATER SYSTEM PLAN
CITY OF POULSBO, KITSAP COUNTY, WASHINGTON
G&O #13548.00

Dear Mr. Nutsford:

On behalf of the City of Poulsbo, I would like to notify you that the City's 2014 Draft Water System Plan is available for review. Attached is a CD containing the Plan. In accordance with WAC 246-290-100(7), the City of Poulsbo is making this Plan available to all adjacent water purveyors so that they can assess consistency with ongoing and adopted planning efforts.

Also attached is a copy of the letter that was sent along with the Plan to the Washington State Department of Health.

We anticipate that the Department of Health will complete its review of the Plan in 90 days, at which point the Plan will be finalized. We would appreciate receiving any comments you may have within that time period, if possible.

Please refer comments and questions regarding this Plan to the undersigned at (206) 284-0860.

Sincerely,

GRAY & OSBORNE, INC.

Russell Porter, P.E.

RLP/hhj
Encl.

cc: Ms. Diane Lenius, Assistant City Engineer, City of Poulsbo

701 Dexter Avenue N., Suite 200 Seattle, Washington 98109 (206) 284-0860 Fax (206) 283-3206

Printed on recycled paper

Gray & Osborne, Inc.
CONSULTING ENGINEERS

August 22, 2014

Mr. John Kiess
Kitsap County Public Health District
Norm Dicks Government Center
345 Sixth Street, Suite 300
Bremerton, Washington 98337

SUBJECT: DRAFT WATER SYSTEM PLAN
CITY OF POULSBO, KITSAP COUNTY, WASHINGTON
G&O #13548.00

Dear Mr. Kiess:

Enclosed is one CD copy of the final draft of the City of Poulsbo's Water System Plan. The plan has been reviewed by the City and is ready for review and adoption by the City, subject to receiving comments from DOH and Kitsap County. At this time, the Plan has also been submitted to DOH and adjacent purveyors for their review.

Please contact me at your convenience at (206) 284-0860 if you have any questions.

Sincerely,

GRAY & OSBORNE, INC.

Russell Porter, P.E.

RLP/hhj
Encl.

cc: Ms. Diane Lenius, Assistant City Engineer, City of Poulsbo

701 Dexter Avenue N., Suite 200 Seattle, Washington 98109 (206) 284-0860 Fax (206) 283-3206

Printed on recycled paper

Gray & Osborne, Inc.
CONSULTING ENGINEERS

August 22, 2014

Mr. Brian Houghton
Skookum Ranch Water System
P.O. Box 336
Gig Harbor, Washington 98335

SUBJECT: DRAFT WATER SYSTEM PLAN
CITY OF POULSBO, KITSAP COUNTY, WASHINGTON
G&O #13548.00

Dear Mr. Houghton:

On behalf of the City of Poulsbo, I would like to notify you that the City's 2014 Draft Water System Plan is available for review. Attached is a CD containing the Plan. In accordance with WAC 246-290-100(7), the City of Poulsbo is making this Plan available to all adjacent water purveyors so that they can assess consistency with ongoing and adopted planning efforts.

Also attached is a copy of the letter that was sent along with the Plan to the Washington State Department of Health.

We anticipate that the Department of Health will complete its review of the Plan in 90 days, at which point the Plan will be finalized. We would appreciate receiving any comments you may have within that time period, if possible.

Please refer comments and questions regarding this Plan to the undersigned at (206) 284-0860.

Sincerely,

GRAY & OSBORNE, INC.

Russell Porter, P.E.

RLP/hhj
Encl.

cc: Ms. Diane Lenius, Assistant City Engineer, City of Poulsbo

701 Dexter Avenue N., Suite 200 Seattle, Washington 98109 (206) 284-0860 Fax (206) 283-3206

Printed on recycled paper

Gray & Osborne, Inc.
CONSULTING ENGINEERS

August 22, 2014

Mr. Bill Whiteley
Kitsap Public Utility District
1431 Finn Hill Road
Poulsbo, Washington 98370

SUBJECT: DRAFT WATER SYSTEM PLAN
CITY OF POULSBO, KITSAP COUNTY, WASHINGTON
G&O #13548.00

Dear Mr. Whiteley:

On behalf of the City of Poulsbo, I would like to notify you that the City's 2014 Draft Water System Plan is available for review. Attached is a CD containing the Plan. In accordance with WAC 246-290-100(7), the City of Poulsbo is making this Plan available to all adjacent water purveyors so that they can assess consistency with ongoing and adopted planning efforts.

Also attached is a copy of the letter that was sent along with the Plan to the Washington State Department of Health.

We anticipate that the Department of Health will complete its review of the Plan in 90 days, at which point the Plan will be finalized. We would appreciate receiving any comments you may have within that time period, if possible.

Please refer comments and questions regarding this Plan to the undersigned at (206) 284-0860.

Sincerely,

GRAY & OSBORNE, INC.

Russell Porter, P.E.

RLP/hhj
Encl.

cc: Ms. Diane Lenius, Assistant City Engineer, City of Poulsbo

701 Dexter Avenue N., Suite 200 Seattle, Washington 98109 (206) 284-0860 Fax (206) 283-3206

Printed on recycled paper

Gray & Osborne, Inc.
CONSULTING ENGINEERS

August 22, 2014

Ms. Corina Hayes
Washington State Department of Health
Southwest Drinking Water Operations
243 Israel Road SE, First Floor
Tumwater, Washington 98501

SUBJECT: DRAFT WATER SYSTEM PLAN
CITY OF POULSBO, KITSAP COUNTY, WASHINGTON
G&O #13548.00

Dear Ms. Hayes:

Enclosed are three copies of the City of Poulsbo's draft Water System Plan. The Plan has been reviewed by the City and is ready for review and adoption by the City, subject to receiving comments from DOH and Kitsap County. At this time, the Plan has also been submitted to Kitsap County and adjacent purveyors for their review.

A copy of the DOH Water System Plan Submittal form and the DOH Water System Plan Checklist are included in Appendix A of the document.

Please contact me at your convenience at (206) 284-0860 if you have any questions.

Sincerely,

GRAY & OSBORNE, INC.

Russell Porter, P.E.

RLP/hhj
Encl.

cc: Ms. Diane Lenius, Assistant City Engineer, City of Poulsbo
Mr. John Kiess, Kitsap Public Health District
Mr. Bill Whiteley, District Engineer, Kitsap Public Utility District
Mr. Jason Nutsford, Viewside Community Water System
Mr. Brian Houghton, Skookum Ranch Water System

701 Dexter Avenue N., Suite 200 Seattle, Washington 98109 (206) 284-0860 Fax (206) 283-3206

Printed on recycled paper

Gray & Osborne, Inc.
CONSULTING ENGINEERS

September 19, 2014

Ms. Corina Hayes
Mr. Scott Torpie
Washington State Department of Health
Southwest Drinking Water Operations
243 Israel Road SE, 1st Floor
Tumwater, Washington 98501

SUBJECT: RESPONSES TO COMMENTS, WATER SYSTEM PLAN
CITY OF POULSBO, KITSAP COUNTY, WASHINGTON
G&O #13548.00 ODW #14-0808

Dear Ms. Hayes and Mr. Torpie:

The following is in response to comments from the Washington State Department of Health (DOH) dated September 3, 2014, regarding the Water System Plan for the City of Poulsbo's water system. We will send replacement pages of the plan once we have received approval from all agencies. We have inserted DOH's comments in *italics* followed by our responses to the comments.

1. *The City's Capital Improvement Program (CIP) does not include any work associated with the realignment of pressure zones needed to address low pressure problems described on page 4-5.* ***Please include in the CIP the work necessary to achieve the realignment and the date to complete (even if there is no cost associated with pressure zone realignment).***

   The City can correct the low pressure on Terasse Drive by transferring that neighborhood to the Stendahl subzone from the Low Zone. This area does not currently have low pressure, but is expected to drop below 30 psi during peak hour demands by the end of the 20-year projection period. The City has already sent out maintenance staff to test the valves and can transfer this neighborhood. The City will provide notification letters in November 2014 and shortly thereafter transfer the zone while they are performing flushing in the area. In the Stendahl subzone, the pressure will not drop below 30 psi during peak hour demands in the 20-year projection period. This operation change has been described on page 4-5 where the low pressure is mentioned.

701 Dexter Avenue N., Suite 200 Seattle, Washington 98109 (206) 284-0860 Fax (206) 283-3206

Printed on recycled paper

After further discussion with the City, the Viking Crest Condominiums are served by a meter located at the intersection of NE Torval Canyon Road and 4th Avenue NE. The meter location in the model was at the southern entrance to the condominiums, whereas the meter is actually at the northern entrance near the intersection described above. The pressure at the entrance is near 60 psi and was field verified by the City. The low-pressure node in the model is not actually a demand node so the Viking Crest Condominiums have adequate pressure at the meter. The condominiums have their own private fire flow and domestic booster pumps to serve their residents beyond the meter. Page 4-5 has been updated to address this new pressure.

The low pressure at the 4th Avenue Townhomes will be addressed with Project BS-2. This project is planned to provide the 340 Zone with fire flow pumps to boost pressure and flows during fire flow conditions. Since there are already plans to improve the pump station for fire flow conditions, this project will be coupled with a zone expansion and ensure the pumps are adequate to serve this development and the existing 340 Zone. The zone expansion will include 250 linear feet of new pipe. A further description of the project is included on page 9-4.

2. *There are areas of high service pressure shown on Figure 4-1. CIP project D-2 will address the high pressure along Viking Avenue, but the other reported high pressure areas with pressure above 100 pounds per square inch (psi) will remain unaddressed. The 2006 Uniform Plumbing Code (UPC), Chapter 6, "Water Supply and Distribution" states: 608.2 Excessive Water Pressure. "where static water pressure in the water supply piping is in excess of eighty (80) pounds per square inch (522 kPa), an approved type pressure regulator proceeded by an adequate strainer shall be installed and the static pressure reduced to eight (80) pounds per square inch (522 kPa)or less. Such Regulator(s) shall control the pressure to all water outlets in the building unless otherwise approved by the authority having jurisdiction."* ***Please describe how the City protects consumers' plumbing from effects of excessive pressure.*** *(e.g. a condition of service may be the consumer must install an individual pressure relief valve(PRV) on the service line or the City installs a PRV at the meter assembly and is responsible for its maintenance.*

The City has adopted the 2012 UPC, per Section 15.04.020 of the Municipal Code, and does adhere to the UPC requirements for pressure-regulating devices for services above 80 psi. The existing

Printed on recycled paper

Municipal Code language in Section 13.06.220 regarding service pressure "recommends" pressure-regulating devices for services with pressure greater than 80 psi. To provide further authority for enforcing the installation of a device, the City intends to update the language to "require" rather than "recommend" by the end of 2014.

3. *The Water Facilities Inventory (WFI) included in the plan does not reflect the current system population, connection, source use, and the source capacity identified in the plan.* ***Please update the WFI to represent the information in the plan.***

   An updated WFI which reflects the current system population, connections, source use, source capacity, and matches information in the plan is included in Appendix B and has been submitted to DOH.

4. *The wellhead protection plan describes required actions that need to be completed: provide notification to property owners, regulatory agencies, local government, and emergency responders. Please include in the plan a table indicating the name, address, letter type, and date the City will send the letter.* ***Please provide templates of the letter to be sent to each group.***

   A table with the information requested and a template of the letter that will be sent out has been included in Appendix C after the Wellhead Protection Plan.

5. *Page 5 of the Poulsbo Construction Standards and Specifications. The City's standard horizontal separation between storm sewers and water mains is inconsistent with the industry standards and ODW recommendation design practices.* ***Please revise the standard to reflect a minimum horizontal separation equal to 10 feet or provide justification for the 5-foot standard.***

   The City standard for storm and water main is a minimum of 5 feet due to roadway prism limitations, and the standard allows the City to keep the priority on a 10-foot separation between the water and sanitary sewer. In the event that the separation between water and storm is less than 10 feet with pipes running parallel to the installation, the installation meets the requirements of the *Separation Design and Installation Reference Guide, Version 9*, May 2006 (Washington State Department of

Ecology/Washington State Department of Health) with the following criteria:

- The waterline and stormwater line are located in a separate trench (Reference COP Construction Standards Unusual Conditions Parallel 3.a).
- All City of Poulsbo water main is Class 52 ductile iron (COP Construction Standards Section 4G).
- Separation meets the requirements of Table 3: Estimates of Horizontal Pipe Separation vs. Critical Trench Depth for Water Line Buried at 3.5 Feet from the above-mentioned Ecology/DOH Reference Guide.
- In accordance with the Ecology/DOH Reference Guide, "the minimum pipe separation should be 3 1/2 to 4 feet" is maintained with the standard detail.

6. *Coliform Monitoring Plans (CMP). Does not meet our expectations for large water systems.* ***Please complete the following documents and include them in Appendix F.*** *We suggest you use the 3-D map shown in Figure 4-1 as the base for identifying the location of routine and repeat coliform monitoring sites.*

   - *How to prepare a Coliform Plan, ODW Publication #331-036?*
   - *Coliform Monitoring Plan Template*
   - *Distribution System E. coli response checklist*
   - *E. coli-present triggered source sample response checklist: Source S*

   The ODW publication was consulted to fill out the new Coliform Monitoring Plan template. The monitoring plan template, the Distribution System E. coli response checklist, and the E. coli-present triggered source sample response checklist have all been filled out and replace the existing CMP in Appendix F.

7. *The cross connection control (CCC) program description given in Appendix H is inconsistent with the information provided in the 2013 CCC Annual Summary Report (ASR) submitted by the City. Based on the information provided in the ASR, the City's CCC program meets our expectations for water purveyors. However, Appendix H describes a CCC program that is far from compliant; for example, it says that the City has not yet developed and implemented an evaluation program that assesses*

the risk of existing water service connections. Please reconcile the information between the two documents. To the extent the City's CCC program must be improved to achieve compliance with each of the 10 elements of WAC 246-290-490, ***please provide in the plan a summary table of the applicable element, current status, what needs to be completed to achieve compliance, by whom, and the City's deadline to complete the task(s).***

The cross-connection control actions described in the 2013 CCC ASR is what the City follows. The CCC document is in the process of being updated. The City will update the CCC document by the end of the year and send out a document to replace what is currently in Appendix H.

GENERAL COMMENTS

8. ***A licensed professional engineer must stamp and sign the plan.***

A licensed professional engineer has stamped and signed the plan.

9. ***Please provide the Local Government Consistency Forms for both the City and County.***

The signed Local Government Consistency Form from the City and any comments received are included in Appendix A. The City Planning Department requested an additional paragraph comparing water use in the 2007 and 2014 plans be added to the Executive Summary and is on page E-2. The Planning Department requested some paragraphs be updated on pages 2-10, 2-11, and 2-12 and they have been updated accordingly. The County plans on providing the form the week of September 29 and this will be sent to DOH under separate cover.

10. ***Please provide a signed State Environmental Policy Act (SEPA) application and Determination.***

A signed SEPA application is included in Appendix G. The City is waiting for the comment period to end on September 26 and will issue the determination on September 29. The City Council is scheduled to review and approve the final Water System Plan, inclusive of the responses to DOH comments, on September 24. The final motion will be forwarded to DOH on September 25.

Printed on recycled paper

11. ***Please provide documentation that a consumer meeting was held, the document was made available to adjacent purveyors, and that the plan was adopted by the governing board.***

The Water System Plan, including Water Use Efficiency Goals, was presented to City Council and the public on September 3, 2014. The City approved the draft Water System Plan and the water efficiency goals. The meeting was also televised for the public. The letters sent to adjacent purveyors are included in Appendix A. These letters were also accompanied by a CD including a copy of the plan. A separate notification of the City Council's approval of the final Water System Plan with this response letter and corrections will be sent to DOH once this occurs.

12. ***Please provide documentation that the water use efficiency (WUE) goal was adopted by the governing board after a public meeting.***

The Water System Plan, including Water Use Efficiency Goals, was presented to City Council and the public on September 3, 2014. The City approved the draft Water System Plan and the water efficiency goals. Once the documents from the meeting become available, they will be sent to DOH and added to Appendix A.

OBSERVATIONS/CLARIFICATIONS

13. *The rate information shown in Table 6-6 and 10-2 is inconsistent.* ***Please revise or explain the difference.***

The rate information in Table 6-6 has been revised to match Table 10-2 and the Poulsbo Municipal Code.

14. *The capital revenue shown in Table 10-6 is not consistent with the capital revenue shown in Table 10-10. Please revise or explain the difference. In addition, should "end of year cash" shown in Table 10-10 reflect the addition of "net operating revenue" from Table 10-8?*

Table 10-6 has been updated and is now consistent with Table 10-10. The "Net Operating Revenue" from Table 10-8 is the same as the "Transfer from Operations" in Table 10-6. This value is included in the "Total Capital Revenue" in Tables 10-6 and 10-10. The "End of Year Cash"

Printed on recycled paper

value does include "Net Operating Revenue" indirectly through this "Capital Revenue" value.

Please contact the undersigned at (206) 284-0860 with any questions.

Sincerely,

GRAY & OSBORNE, INC.

Corinne Travis, P.E.

CMT/hhj

cc: Ms. Diane Lenius, Assistant City Engineer, City of Poulsbo
Mr. John Kiess, Kitsap Public Health District
Mr. Bill Whiteley, District Engineer, Kitsap Public Utility District
Mr. Jason Nutsford, Viewside Community Water System
Mr. Brian Houghton, Skookum Ranch Water System

Printed on recycled paper

STATE OF WASHINGTON
DEPARTMENT OF HEALTH
SOUTHWEST DRINKING WATER REGIONAL OPERATIONS
PO Box 47823, Olympia, Washington 98504-7823
TDD Relay 1-800-833-6388

September 3, 2014

Keith Svarthumle
City of Poulsbo
200 Northeast Moe Street
Poulsbo, Washington 98370

Subject: City of Poulsbo, ID #691506, Kitsap County; Water System Plan, ODW Project #14-0808

Dear Keith Svarthumle:

Thank you for submitting the City of Poulsbo (City) Water System Plan (WSP) received by the Office of Drinking Water (ODW) on August 25, 2014. We have reviewed the WSP and have the following comments that need to be addressed before ODW can approve the plan:

Chapter 9

1. The City's Capital Improvement Program (CIP) does not include any work associated with the realignment of pressure zone(s) needed to address low pressure problems described on page 4-5. **Please include in the CIP the work necessary to achieve the realignment, and the date to complete (even if there is no cost associated with pressure zone realignment).**
2. There are areas of high service pressure shown on Figure 4-1. CIP project D-2 will address the high pressure along Viking Avenue, but the other reported high-pressure areas with pressure above 100 pounds per square inch (psi) will remain unaddressed. The 2006 Uniform Plumbing Code (UPC), Chapter 6, "Water Supply and Distribution" states: 608.2 Excessive Water Pressure. "Where static water pressure in the water supply piping is in excess of eighty (80) pounds per square inch (552 kPa), an approved type pressure regulator preceded by an adequate strainer shall be installed and the static pressure reduced to eighty (80) pounds per square inch (552 kPa) or less. Such Regulator(s) shall control the pressure to all water outlets in the building unless otherwise approved by the authority having jurisdiction." **Please describe how the City protects consumers' plumbing from effects of excessive pressure** (e.g., a condition of service may be the consumer must install an individual pressure relief valve (PRV) on the service line or the City installs a PRV at the meter assembly and is responsible for its maintenance).

Appendix B

3. The Water Facilities Inventory (WFI) included in the plan does not reflect the current system population, connections, source use, and source capacity identified in the plan. **Please update the WFI to represent the information in the plan.**

Appendix C

4. The wellhead protection plan describes required actions that need to be completed: provide notification to property owners, regulatory agencies, local government, and emergency responders. Please include in the plan a table indicating the name, address, letter type, and date the City will send the letter. **Please provide templates of the letter to be sent to each group.**

Appendix D

5. Page 5 of the Poulsbo Construction Standards and Specifications. The City's standard for horizontal separation between storm sewers and water mains is inconsistent with industry standards and ODW recommended design practices. **Please revise the standard to reflect a minimum horizontal separation equal to 10 feet or provide justification for the 5-foot standard.**

Appendix F

6. Coliform Monitoring Plan (CMP). Does not meet our expectations for large water systems. **Please complete the following documents and include them in Appendix F.** We suggest you use the 3-D map shown in Figure 4-1 as the base for identifying the location of routine and repeat coliform monitoring sites.

   - How to Prepare a Coliform Plan, ODW Publication #331-036
   - Coliform Monitoring Plan Template
   - Distribution system *E. coli* response checklist
   - *E. coli*-present triggered source sample response checklist: Source S

   These documents are available at
   http://www.doh.wa.gov/CommunityandEnvironment/DrinkingWater/Contaminants/Coliform/PreparingaColiformMonitoringPlan/LargeorMultipleSource.

Appendix H

7. The cross connection control (CCC) program description given in Appendix H is inconsistent with the information provided in the 2013 CCC Annual Summary Report (ASR) submitted by the City. Based on the information provided in the ASR, the City's CCC program meets our expectations for water purveyors. However, Appendix H describes a CCC program that is far from compliant; for example, it says that the City has not yet developed and implemented an evaluation program that assesses the risk of existing water service connections. Please reconcile the information between the two documents. To the extent the City's CCC program must be improved to achieve compliance with each of the 10 elements in WAC 246-290-490, **please provide in the plan a summary table of the applicable element, current status, what needs to be completed to achieve compliance, by whom, and the City's deadline to complete the task(s).**

General Comments

8. **A licensed professional engineer must stamp and sign the plan.**
9. **Please provide the Local Government Consistency Forms from both the City and the County.**
10. **Please provide a signed State Environmental Policy Act (SEPA) application and Determination.**
11. **Please provide documentation that a consumer meeting was held, the document was made available to adjacent purveyors, and that the plan was adopted by the governing board.**
12. **Please provide documentation that the water use efficiency (WUE) goal was adopted by the governing board after a public meeting.**

Observations/Clarification (no response required)

13. The rate information shown in Tables 6-6 and 10-2 is inconsistent. **Please revise or explain the reason for the difference.**
14. The capital revenue shown in Table 10-6 is not consistent with capital revenue shown in Table 10-10. **Please revise or explain the reason for the difference.** In addition, should "end of year cash" shown in Table 10-10 reflect the addition of "net operating revenue" from Table 10-8?

DEPARTMENT OF ECOLOGY

Our review of your water system plan does not confer or guarantee any right to a specific quantity of water. Our review is based on your representation of available water quantity. If the Washington Department of Ecology, a local planning agency, or other authority responsible for determining water rights and water system adequacy determines that you have use of less water than you represent, the number of approved connections may be reduced commensurate with the actual amount of water and your legal right to use it.

To expedite the review of the revised WSP, please summarize how each of the required responses was addressed and where each response is located (for example, page numbers, appendices, and so on).

Regulations establishing a schedule of fees for review of planning, engineering, and construction documents were adopted April 30, 2012 (WAC 246-290-990). An invoice for $3,705 is enclosed.

If you have any questions, please contact me at (360) 236-3031 or Scott Torpie (360) 236-3131.

Sincerely,

Corina Hayes
Office of Drinking Water, Regional Planner

Scott Torpie, P.E.
Office of Drinking Water, Engineering Advisor

Enclosures

cc: Diane Lenius, City of Poulsbo
Russ Porter, Gray & Osborne, Inc.
Kitsap County Planning Department
Kitsap Public Health District
Jacqueline Klug, Department of Ecology

STATE OF WASHINGTON
DEPARTMENT OF ECOLOGY
Northwest Regional Office • 3190 160th Ave SE • Bellevue, WA 98008-5452 • 425-649-7000
711 for Washington Relay Service • Persons with a speech disability can call 877-833-6341

September 11, 2014

Keith Svarthumle
City of Poulsbo
200 NE Moe Street
Poulsbo, WA 98370

Re: City of Poulsbo Water System Plan, DOH ID #69150, Submittal #14-0808

Dear Mr. Svarthumle:

Thank you for the opportunity to review the City of Poulsbo August 2014 Draft Water System Plan update. Consistent with the Memorandum of Understanding between the Departments of Ecology and Health, I have reviewed the relevant portions of the Water System Plan (WSP) and offer the following comments.

Water Right Assessment

Modified from ROE for CG1-25375P (Lincoln Hill Well #2) 2009

Water Rights held by the City of Poulsbo						
File #	**Cert #**	**Priority Date**	**Qi (gpm)**	**Qa_A (afy)***	**Qa_N (afy)***	**Source Name**
S1-*05585C	2115	9/24/1941	539	867		Westside Well
S1-*11528C	5585	7/17/1952	449	723		Big Valley Springs #1
S1-*16431C	8525	10/24/1960	90	145		Big Valley Springs #2
G1-*08457C	6087	12/30/1966	475		396	Lincoln Well
G1-00643C		2/13/1969	100		160	Bus Barn Well
G1-23707C		10/14/1980	215		344	Big Valley Well #1
G1-25375P		1/10/1989	650		735	Pugh Rd. Well/ Lincoln Well 2
G1-27192P		6/15/1993	600		672	Big Valley Well #2
Total			**3,118**	**1,893****	**2,169**	

*Qa_A=Additive Annual Quantity; Qa_N=Non-Additive Annual Quantity
** Qa for G1-25375P and G127192P stated maximum Qa is 1,893 afy

I had the opportunity to work on Poulsbo's water rights portfolio in 2009, at which time I reviewed in depth the relationship of the city's additive and non-additive rights. The table above summarizes these relationships as well as Ecology databases and records regarding City of Poulsbo water rights.

Note that the total of non-additive annual quantity (Qa_N) is greater than total allowable additive annual quantity (Qa_A). This may at some point in the future represent a challenge to the city as they approach their water right limit while retaining substantial system capacity in their upland wells as opposed to their Big Valley Springs. We are pleased however to see that the city recognizes their limitations in their water right self assessment and planning sections.

Thank you again for the opportunity to review the Poulsbo WSP. Please contact me at (425) 649-7077 or at Doug.Wood@ecy.wa.gov if you have questions regarding this review or need additional information.

Sincerely,

Douglas H. Wood, MS, LHG
Water Resource Program

cc: Debbie Philips, Department of Health
Kitsap County Health District

Gray & Osborne, Inc.
CONSULTING ENGINEERS

September 19, 2014

Mr. Bill Whiteley
Kitsap Public Utility District
P.O. Box 1989
Poulsbo, Washington 98370

SUBJECT: RESPONSES TO COMMENTS, WATER SYSTEM PLAN
CITY OF POULSBO, KITSAP COUNTY, WASHINGTON
G&O #13548.00 ODW #14-0808

Dear Mr. Whiteley:

The following is in response to comments from the KPUD dated September 18, 2014, regarding the Water System Plan for the City of Poulsbo's water system. We will send replacement pages of the plan once we have received approval from all agencies. We have inserted the KPUD's comments in *italics* followed by our responses to the comments.

1. *On Page 1-14:*

   a. *The Vinland System has 1308 ERU's at this time, and has an undetermined capacity as approved by WSDOH.*
   b. *The Gala Pines System serves 52 ERU's at this time and is approved for 52 ERU's.*
   c. *The Poulsbo Heights system serves 32 ERU's and is approved for 32 ERU's.*

   The descriptions of the systems above have been revised to match the information provided.

2. *The water service area shown in figure 105 is not up to date, see the attached pdf from our recent WSP update.*

   Figure 1-5 has been updated to reflect the retail service area of the Indian Hills system.

701 Dexter Avenue N., Suite 200 Seattle, Washington 98109 (206) 284-0860 Fax (206) 283-3206

Printed on recycled paper

3. *On Page 1-15 you could add the related documents: the KPUD 2011 WSP update, approved 12-28-11.*

   The 2011 Kitsap Public Utility District Water System Plan has been added to the list of related documents.

4. *Figures 1-4 shows the Vinland intertie PRV in the wrong place, it should be on Finn Hill Rd.*

   The Vinland intertie PRV location has been moved to Finn Hill Road.

Please contact the undersigned at (206) 284-0860 with any questions.

Sincerely,

GRAY & OSBORNE, INC.

Corinne Travis, P.E.

CMT/hhj

cc: Ms. Diane Lenius, Assistant City Engineer, City of Poulsbo

Printed on recycled paper

PUBLIC UTILITY DISTRICT
CONNECTING KITSAP

KITSAP PUD
1431 FINN HILL ROAD
PO BOX 1989
POULSBO, WA 98370
360.779.7656
FAX 360.779.3284

September 18, 2014

Diane Lenius, PE
City of Poulsbo Engineering Dept.
PO Box 2275
Poulsbo, WA 98370

RE: City of Poulsbo Draft Water System Plan

Dear Diane,

We have done a quick review of the water system plan submitted to us August 22nd by Gray and Osborne. In general it looks to be a well done document, congratulations on a job well done.

We did notice a couple of inaccuracies that we can help with.

1. On page 1-14:
    a. The Vinland System has 1308 ERU's at this time, and has an undetermined capacity as approved by WSDOH.
    b. The Gala Pines System serves 52 ERU's at this time and is approved for 52 ERU's.
    c. The Poulsbo Heights system serves 32 ERU's and is approved for 32 ERU's .
2. The Water Service area shown in figure 1-5 is not up to date, see the attached pdf from our recent WSP update.
3. On Page 1-15 you could add to the related documents: the KPUD 2011 WSP update, approved 12-28-11.
4. Figures 1-4 shows the Vinland intertie PRV in the wrong place, it should be on Finn Hill Rd.

Thank you for the opportunity to provide comments on your WSP update. I hope our comments prove to be helpful.

Sincerely,

WHW

William H. Whiteley, III PE
District Engineer

Kitsap P.U.D. Indian Hills Water System
Existing Service Area

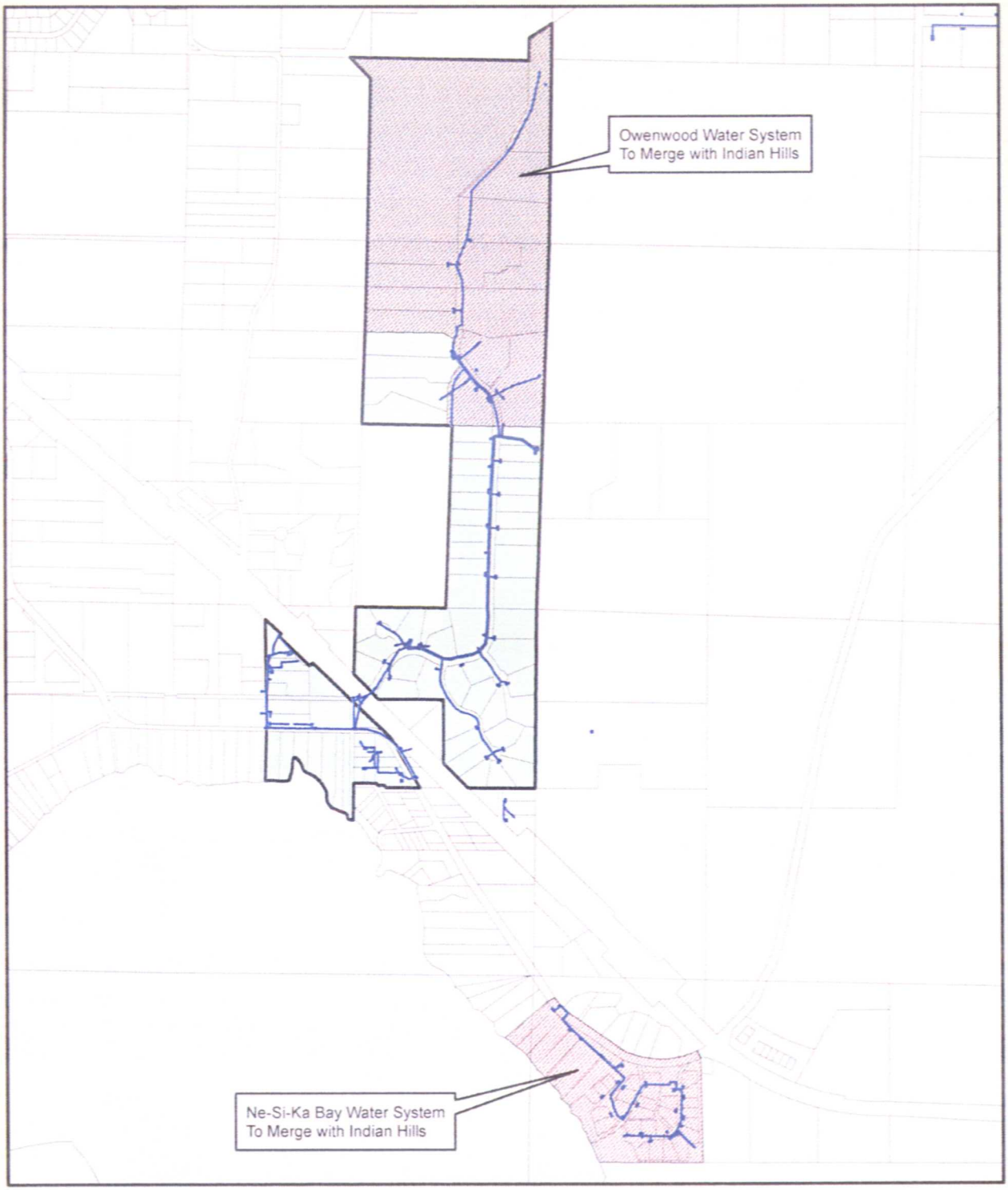

General Location of Map Within Kitsap Co.

Legend

- KPUD Water Infrastructure
- Kitsap County Tax Parcel Layer
- Systems to Merge with Indian Hills
- Existing Service Area

N
W E
S

0 0.045 0.09 0.18 Miles

Map Created August 11, 2011

Lambert Conformal Conic Projection
North American Datum 1983
Spheroid GRS80
State Plane Coordinate System
FIPS Zone 4601
Washington North

PUBLIC UTILITY DISTRICT

Kitsap Public Utility District
P.O. Box 1989, Poulsbo, Washington 98370
(360) 779-7656 * FAX (360) 779-3284
Product of Kitsap P.U.D. Geographic Information System

Kitsap P.U.D. Indian Hills Water System
Retail Service Area

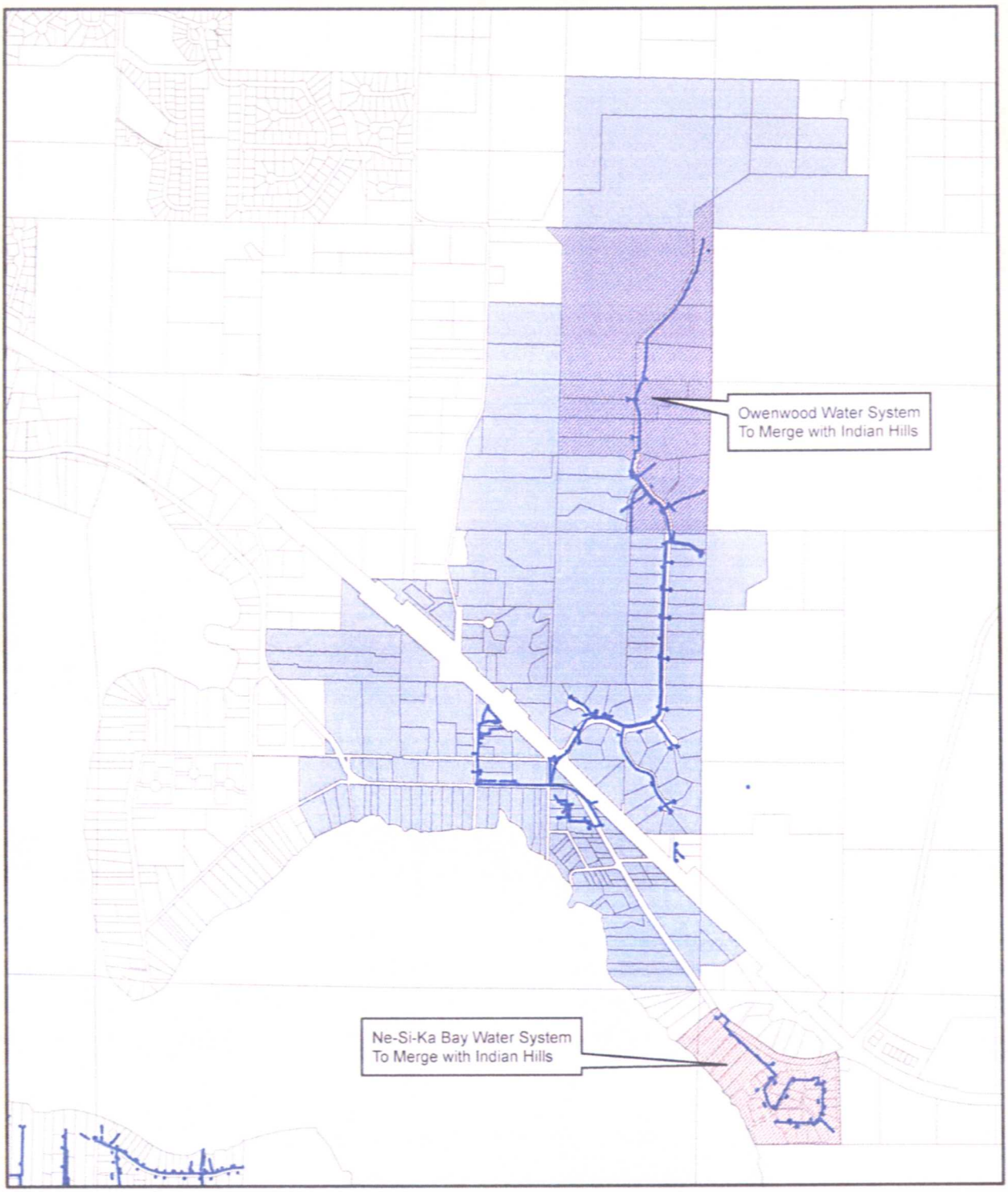

Legend

- KPUD Water Infrastructure
- Kitsap County Tax Parcel Layer
- Systems to Merge with Indian Hills
- KPUD - Indian Hills Retail Service Area, 223 Tax Parcels

0 0.05 0.1 0.2 Miles

Map Created August 11, 2011

Lambert Conformal Conic Projection
North American Datum 1983
Spheroid GRS80
State Plane Coordinate System
FIPS Zone 4501
Washington North

PUBLIC UTILITY DISTRICT

Kitsap Public Utility District
P.O. Box 1989, Poulsbo, Washington 98370
(360) 779-7656 • FAX (360) 779-3284
Product of Kitsap P.U.D. Geographic Information System

Kitsap P.U.D. Indian Hills Water System
Future Service Area

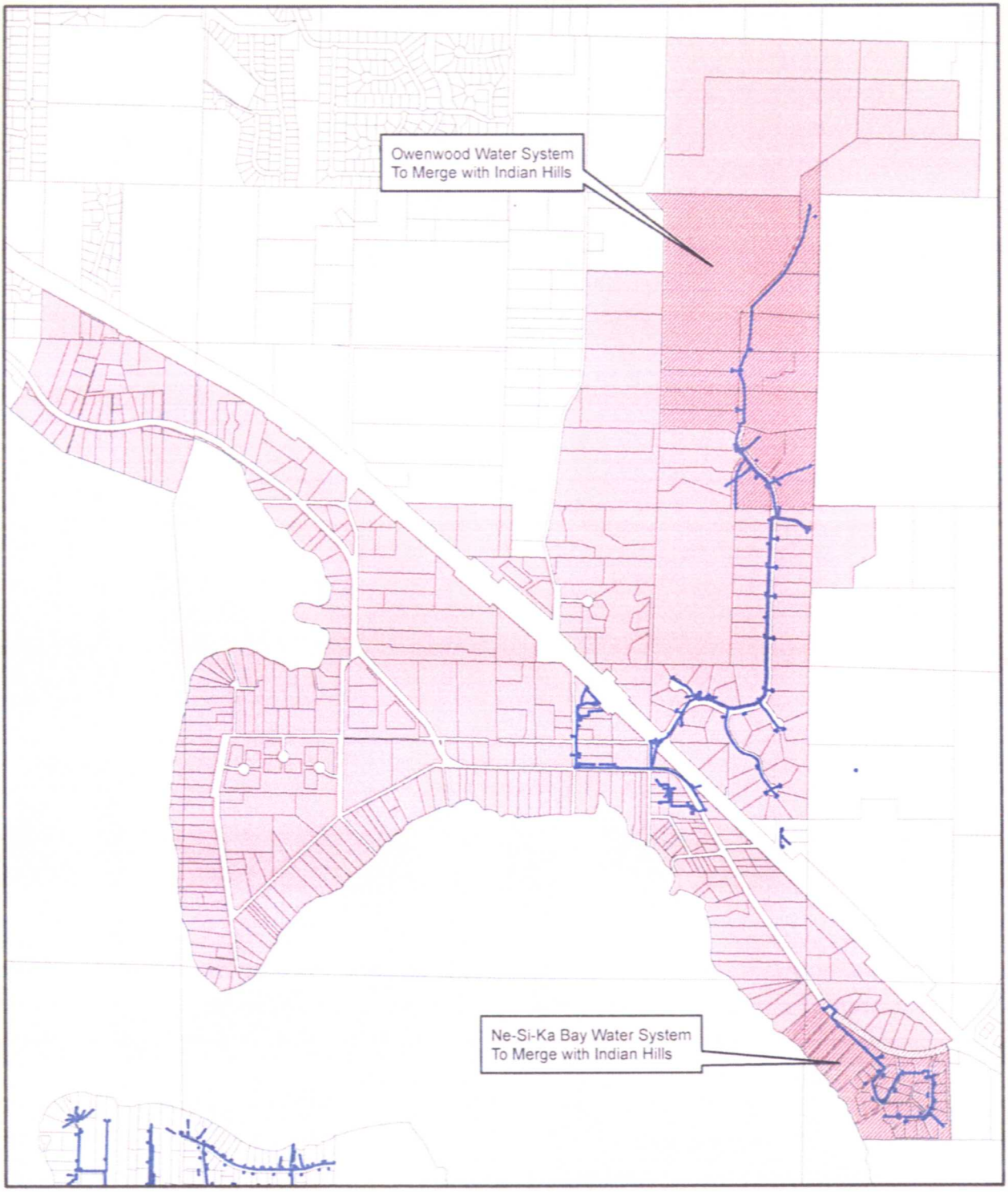

Legend

- KPUD Water Infrastructure
- Kitsap County Tax Parcel Layer
- Systems to Merge with Indian Hills
- Future Service Area - 503 Tax Parcels

0 0.045 0.09 0.18 Miles

Map Created August 11, 2011

Lambert Conformal Conic Projection
North American Datum 1983
Spheroid: GRS80
State Plane Coordinate System
FIPS Zone 4601
Washington North

PUBLIC UTILITY DISTRICT

Kitsap Public Utility District
P.O. Box 1989, Poulsbo, Washington 98370
(360) 779-7656 * FAX (360) 779-3284
Product of Kitsap P.U.D. Geographic Information System

APPENDIX B

INTERTIE AGREEMENTS, WATER RIGHTS SELF ASSESSMENT, AND WFI

POULSBO AGREEMENT DISTRIBUTION SCHEDULE

SUBJECT: **Public Utility District No. 1 of Kitsap County – Water System Service Area Adjustment and Operation (ILA)**

CONFORM AS TO DATES & SIGNATURES

(X) Approved by the City Council: 02/09/2011
(X) Effective: 02/24/2011
(X) Completion: Until Terminated
(X) Recorded: N/A

DISTRIBUTE CONFORMED COPIES AS FOLLOWS:

(_) City Attorney
(1) Clerk's Department: Original
(X) Posted to Library Drive
(_) Posted to Web Site
(_) Finance:
(_) Fire District #18
(_) Mayor
(_) Municipal Court
(_) MRSC
(_) Parks/Recreation
(_) Planning/Building
(_) Police
(_) Public Works/Engineering:

City Clerk

April 22, 2011
Date

PUBLIC UTILITY DISTRICT
CONNECTING KITSAP

KITSAP PUD
1431 FINN HILL ROAD
PO BOX 1989
POULSBO, WA 98370
360.779.7656
FAX 360.779.3284

RECEIVED
MAR 10 2011
CITY OF POULSBO

March 8, 2011

Jill A. Boltz
City Clerk
200 NE Moe Street
Poulsbo, WA 98370

RE: Interlocal Agreement between the City of Poulsbo and PUD No. 1

Dear Ms. Boltz,

Please find enclosed one signed original as requested and returned to your attention.

Please feel free to contact me if I can be of further assistance.

Sincerely,

Corine Vichi
Administrative Assistant

Encl

INTERLOCAL AGREEMENT BETWEEN THE CITY OF POULSBO AND PUBLIC UTILITY DISTRICT NO. 1 OF KITSAP COUNTY FOR WATER SYSTEM SERVICE AREA ADJUSTMENT AND OPERATION

THIS AGREEMENT is entered into between the City of Poulsbo, an optional municipal code city of the State of Washington ("the City") and the Public Utility District No. 1 of Kitsap County ("KPUD"), a municipal corporation under the laws of the State of Washington.

WHEREAS, KPUD currently has an intertie on Finn Hill Road connecting its Vinland Water System to the City's West High Pressure Zone; and

WHEREAS, a second intertie on NW Reliance Street connecting the KPUD Vinland Water System to the City's West High Pressure Zone will be completed in 2011; and

WHEREAS, the City's West High Pressure Zone is currently operating at a water storage deficit of 336,000 gallons; and

WHEREAS, this storage deficit is expected to increase to 661,000 gallons by the year 2012 and to 998,000 gallons by the year 2026; and

WHEREAS, KPUD's Vinland Water System is currently operating with a 360,000 gallon storage surplus; and

WHEREAS, KPUD has planned infrastructure improvements that will increase the Vinland Water System's storage surplus sufficient to meet the City's West High Pressure Zone's storage deficits identified in the City's 5 and 20 year planning horizon (2012 and 2026), now, therefore,

FOR AND IN CONSIDERATION OF the terms and conditions provided below, the parties agree as follows:

1. **Kitsap Public Utility District will provide storage to the City of Poulsbo's West High Pressure Zone.** Through an intertie with the City of Poulsbo's Water System and KPUD's Vinland Water System, KPUD will provide the City's West High Pressure Zone with current and future storage needs as described in the City's 2007 Water System Plan. This intertie is to meet the City's storage requirements and, also, provide water in the event of an emergency. Should, in the future, the City require additional source for daily supply, this will be worked out in a separate wholesale agreement between the City and KPUD. The current agreement to provide storage and emergency supply is subject to the following terms:
    a. All water delivered pursuant to this agreement shall be metered and measured by KPUD.
    b. Water provided through the interties shall be billed at 50% of KPUD's existing Tier One commodity charge.

c. Each party to this agreement shall provide isolation valves and related facilities on their respective water mains at the points of connection.
d. Additional intertie points may be established by agreement of both parties.
e. Those facilities lying within KPUD's service area and upstream of the metering station(s) shall remain the property and responsibility of KPUD and those facilities lying within the City's service area and downstream of the metering station(s) shall remain the property and responsibility of the City.

2. **The City will cede to KPUD's service area all properties along Urdahl Road (see attached map).** This service area adjustment will be done in accordance with procedures set forth in the Kitsap County Coordinated Water System Plan, Regional Supplement, 2005 Revision. Kitsap Public Utility District and the City of Poulsbo agree the service area adjustment will proceed with the following operating procedures.
    a. KPUD will collect all Capital Facilities and Service Installation in accordance with KPUD fee schedules from the properties in the ceded service area.
    b. KPUD will install services and meters to the properties in the ceded service area.
    c. The City of Poulsbo will read meters in the ceded service area for the purposes of monthly sewer billing. KPUD will separately read meters for water billing.
    d. KPUD will bill for water service in the ceded service area at established KPUD rates.
    e. KPUD will manage all customer water billing issues including late payment notifications, shut-off notices, and service turn on and off.
    f. KPUD will handle all water system operations, maintenance, and construction in the ceded area and own the infrastructure.
    g. The City will ensure water service issues raised by customers in the ceded area are immediately passed to KPUD for resolution.
    h. KPUD authorizes the City to take emergency actions when necessary in the ceded area to prevent damage to public or private property.
    i. KPUD will provide the required Annual Drinking Water Quality Report to the customers in the ceded area.
    j. KPUD will ensure delivered water meets Federal and State drinking water regulations and is consistent, in quality and treatment, with that provided throughout the associated KPUD system.
    k. Both parties recognize that supply may be limited by conditions and circumstances beyond the control of KPUD. These include, but are not limited to natural disasters, prolonged drought and equipment failure. Should any of these conditions require reduction in service levels, these reductions will be consistent with those applied throughout the associated KPUD system.
    l. KPUD activities in the City of Poulsbo right-of-way will be subject to the City Public Property Construction procedures.
    m. KPUD water service in City limits will be subject to current City Utility Tax.

3. **City Indemnity of KPUD**. To the extent permitted by law, City shall indemnify and hold harmless KPUD and its officers, directors, trustees, agents and employees from any and all demands, claims, causes of action, losses, damages, liabilities, obligations, remedies,

penalties, costs and expenses (including without limitation, reasonable attorneys' fees) arising out of, pertaining to, or in connection with

a. any acts or omissions of City, its successors, assigns or agents, subsequent to the date of this Agreement with respect to or in relation to the ceded service area or any of the services provided pursuant to this Agreement, and
b. a breach of any representation or warranty made herein.

4. **KPUD Indemnity of City**. To the extent permitted by law, KPUD shall indemnify and hold harmless City and its officers, directors, trustees, agents and employees from any and all demands, claims, causes of action, losses, damages, liabilities, obligations, remedies, penalties, costs and expenses (including without limitation, reasonable attorneys' fees) arising out of, pertaining to, or in connection with

a. any acts or omissions of KPUD, its successors, assigns or agents, subsequent to the date of this Agreement with respect to or in relation to the ceded service area or any of the services provided pursuant to this Agreement, and
b. a breach of any representation or warranty made herein.

5. **Authority.** The Parties each represent and warrant that they and/or their undersigned agents have full power and authority to enter into and to execute this Agreement, and that the execution, delivery and performance by the Parties of this Agreement and the related documents is not in conflict with any law, rule, regulation, writ, judgment, injunction, decree or award, or with the provisions of any agreement to which the Parties or any of them may be bound, including, without limitation, their articles of incorporation or bylaws.

6. **Effective Date**. This Agreement shall become effective when, and only when, it has been duly executed by both of the Parties.

7. **Termination**. This Agreement may be terminated by either Party only if it reasonably believes it cannot meet the needs of the other party. In the event either party intends to terminate this Agreement, said party shall first give the following written notices to the other party:

a. Notice of Intention to Terminate Contract
b. Notice of Termination of Contract

The Notice of Intention to Terminate Contract shall be given at least two (2) years prior to the effective date of termination of the contract. Submitted with the Notice of Intention to Terminate Contract shall be a explanation of the reasons for the termination. In the case of KPUD requesting termination of the contract, KPUD will reimburse the City in the amount of the General Facilities Fees for water the City would have collected in the ceded service area up to the date of termination. If the City requests termination of the contract, the City will reimburse KPUD for any capital costs invested in the ceded area by KPUD up to the date of termination. The Notice of Termination of Contract shall be given at least six (6) months prior to termination date and shall include the effective date of termination. If both parties consent, the Agreement may be terminated within a mutually agreed upon time.

8. **Binding Agreement**. This Agreement shall be binding upon and inure to the benefit of the successors, assigns, trustees, receivers, personal representatives, legatees and devisees of the Parties. Except as set forth herein, no person, organization or association other than KPUD and City shall have any rights or claims under this Agreement.

9. **Entire Agreement**. This Agreement embodies the entire agreement and understanding between the Parties and supersedes all prior agreements and understandings related to the subject matter hereof.

10. **Counsel's Advice**. The Parties represent that they have reviewed the terms of this Agreement with their attorney, that they are authorized to enter into this Agreement, and the Agreement is executed freely and voluntarily as of the date hereof.

11. **Further Assurances**. The Parties will use all reasonable efforts to execute such documents and to take such other actions as may be reasonably necessary to consummate and give effect to the terms of this Agreement.

12. **Jurisdiction and Venue**. This Agreement shall be governed by and construed in accordance with the laws of the State of Washington. The Kitsap County Superior Court shall have jurisdiction and venue of any action or proceeding arising out of or related to the negotiation, execution, performance, breach or the enforcement of this Agreement.

13. **Attorney's Fees to Prevailing Party**. In the event of any litigation in connection with this Agreement, the prevailing Party shall be entitled to recover its attorney's fees and other costs and expenses, including attorney's fees in both trial and appellate courts and in any bankruptcy proceeding.

14. **Counterpart Signatures**. This Agreement may be executed in several counterparts, which when taken together shall constitute one original Agreement. A facsimile signature shall be deemed an original signature for all purposes.

15. **Compliance with RCW 39.34.040.** Pursuant to RCW 39.34.040, this Agreement shall be filed with the Kitsap County Auditor or alternatively, listed by subject on the public web site of the Parties hereto or on other electronically retrievable public source.

16. **No Separate Entity.** It is not contemplated that any property, real or personal, will be acquired by either jurisdiction separately or jointly as a result of this agreement. No separate fund shall be established, and no legal entity is created by this agreement. This agreement shall be jointly administered by the Public Works Director of the City of Poulsbo and the General Manager of KPUD.

IN WITNESS WHEREOF, the Parties have duly executed and delivered this Agreement as of the date first above written.

Dated: February 23, 2011

City of Poulsbo:

Rebecca Erickson

Mayor
Title

Dated: 2/24/2011

Public Utility District No. 1 of Kitsap County

Authorized Signature

Commissioner
Title

POULSBO DISTRIBUTION SCHEDULE

ORDINANCE NO.
RESOLUTION NO.
RESOLUTION OF INTENTION NO.
SUBJECT: **Agreement w/PUD #1 of Kitsap County for Basil Rallis Water Wheeling Agreement**

CONFORM AS TO DATES & SIGNATURES

( ) Filed with the City Clerk
(X) Passed by the City Council: 5/10/2006
(X) Signature of Mayor
(X) Signature of City Clerk
( ) Effective: upon signing
( ) Recorded:

DISTRIBUTE CONFORMED COPIES AS FOLLOWS: email all re library drive

(1) City Attorney:
( ) Civil Service Commission and/or Sec/Chief Examiner
(1) Clerk's Department: Original
(1) Finance: Smith
( ) Fire District #18
( ) Mayor
( ) Municipal Court
( ) MRSC
( ) Parks/Recreation:
( ) Planning/Building:
( ) Police:
(1) Public Works:
( ) PW/Engr:
(1) Bookshelf Contracts Copy
( ) File #
( ) Indexing
(-) KPUD #1 has original

City Clerk

5/11/2006
Date

INTERLOCAL AGREEMENT BETWEEN
THE CITY OF POULSBO
AND
THE PUBLIC UTILITY DISTRICT #1 OF KITSAP COUNTY

WHEREAS, Public Utility District #1 of Kitsap County ("the District") and the City of Poulsbo ("the City") recognize that inter-agency water supply planning is a necessary element of good land and water management; and

WHEREAS, the proposed LONE PINE DEVELOPMENT ("the Development"), comprised of twenty-four single-family residential lots located in unincorporated Kitsap County and more particularly described on Exhibit A to this Interlocal Agreement, is located within the service area boundaries of the District under the Kitsap County Coordinated Water Supply Plan and the District is therefore recognized as the appropriate administrative agency with responsibility for technical, financial, operational, and support services needed to provide water service to the Development; and

WHEREAS, because of the relative locations of City and District water facilities, the City and the District have determined that it would be more efficient and cost-effective for the Development to receive water from the City's water system via a District main to be constructed by the owner of the Development and to be connected to the City's water system, and

WHEREAS, the City has agreed to allow the District main to be connected to the City's water system and to sell the District sufficient water to serve the Development, and the District has agreed to purchase water from the City, according to certain terms and conditions; and

WHEREAS, the District and the City wish to set forth their agreement in writing as follows, now, therefore,

IN CONSIDERATION OF the mutual commitments set forth hereinafter, the District and the City agrees as follows:

1. SALE OF WATER. The City agrees to sell to the District, and the District agrees to purchase from the City, all domestic water required to serve the Development. The City shall deliver the water to the District at the District's main to be constructed by the owner of the Development and connected to the City's water system. The City hereby authorizes the District to connect such main to the City's system, subject to approval of construction plans and specifications by the City.

2. MASTER METER. The District and the City shall require the owner of the Development to install a master water meter at a point where the District main connects to the City's water system. Plans, specifications, and construction methods for

the master meter shall be in accordance with District standards, subject to review and approval by the City.

3. **MAINTENANCE OF SYSTEMS.** Maintenance of District water supply systems outside of the City limits, including the District main installed by the owner of the Development, shall be the responsibility of the District upon dedication to the District. Maintenance of the system within the Development will be subject to the codes, covenants, and restrictions that will be created as part of the Development infrastructure. Maintenance of the master meter shall be the responsibility of the District. Maintenance of the existing City water supply system shall be the responsibility of the City.

4. **MONITOR OF FLOW RATES.** Water consumption within the Development shall be determined by flow rates and volumes as recorded at the master meter. All master meter reading shall be performed by the District.

5. **DISTRICT TO PROVIDE WATER - WHEELING.** In the event that the City determines, at any time and in its sole discretion, that the City has insufficient water to meet the needs of its citizens and that it can no longer sell water to the District under this Agreement, the District agrees that it will supply water to the City equal in amount to that water which is consumed by the Development in exchange for the City continuing to provide water to the District's main as provided in this Agreement. The water shall be delivered to the City's water system at a point which is currently located at 1431 Finn Hill Road, within a metering vault. Future interties for supply for the City or for the District will be agreed upon by the City and the District and with such meters or other facilities as the City and the District mutually agree upon. This agreement provides for water supply to the Development only. Any other water supply issues will be subject to a separate agreement.

6. **PAYMENT.** The District shall pay the City on a monthly basis for all water delivered to the District's main to be constructed by the owner of the Development. The water shall be paid for at the same rate as the City provides water to other customers outside the City limits and the District shall, in addition, pay the City a transmission charge for such water in the amount of $0.05 per 100 cubic feet. The District shall read the master meter on a monthly basis with the reading occurring on the same day each month and the District shall remit to the City full payment for the water used and the transmission charge at the applicable rate within thirty days after the meter reading date. The water rates and transmission charge may be adjusted by the City at any time, provided that the City shall give the District at least ninety days notice of any change in the rates or transmission charge. In the event that the District delivers water to the City as provided in paragraph 5 above, the water rates shall no longer apply, but the District shall continue to pay the City the transmission or "wheeling" charge for such water based on the monthly meter readings.

7. **BILLINGS TO OWNERS WITHIN THE DEVELOPMENT.** The District will be solely responsible for billing and collecting from property owners within the Development for water consumption. No failure on the part of such owners to pay

14. EXECUTION OF DOCUMENTS. This Agreement shall be executed in two counterparts, either of which shall be regarded for all purposes as one original. The parties agree that they will execute any and all deeds, instruments, documents and resolutions or ordinances necessary to give effect to the terms of this Agreement.

15. WAIVER. No waiver by either party of any term or condition of this Agreement shall be deemed or construed as a waiver of any other term or condition, nor shall a waiver of any breach be deemed to constitute a waiver of any subsequent breach whether of the same or a different provision of this Agreement.

16. INTEGRATION. This Agreement merges and supersedes all prior negotiations, representations and agreements between the parties hereto relating to the subject matter hereof and constitutes the entire contract between the parties.

17. TIME OF THE ESSENCE. It is hereby agreed by the parties that time is of the essence in all matters relating to the performance of each and every term of this Agreement.

18. ATTORNEY'S FEES. In the event that either party shall bring litigation against the other in order to enforce any term of this Agreement or to redress any breach thereof, the substantially prevailing party in any such litigation shall be entitled to recover its costs and reasonable attorney's fees from the losing party.

CITY OF POULSBO

MAYOR, KATHRYN H. QUADE
Dated: 15 May 06

PUBLIC UTILITY DISTRICT NO. 1 OF KITSAP COUNTY

BY:
TITLE: Comm President
DATE: 5/16/06

ATTEST:

Karol Jones
CITY CLERK KAROL JONES, CMC

APPROVED AS TO FORM:

OFFICE OF THE CITY ATTORNEY

Washington State Department of Health
Division of Environmental Health
Office of Drinking Water

Table 1

WATER SYSTEM PLAN
WATER RIGHTS SELF ASSESSMENT – EXISTING STATUS

PERMIT CERTIFICATE OR CLAIM #	NAME ON DOCUMENT	PRIORITY DATE (List oldest first)	SOURCE NAME/ NUMBER	ANY PORTION SUPPLEMENTAL? (If yes, explain in footnote)	EXISTING WATER RIGHTS		EXISTING CONSUMPTION		CURRENT WATER RIGHT STATUS (Excess/Deficiency)	
					Maximum Instantaneous Flow Rate (Qi)	Maximum Annual Volume (Qa)	Maximum Instantaneous Flow Rate (Qi)	Maximum Annual Volume (Qa)	Maximum Instantaneous Flow Rate (Qi)	Maximum Annual Volume (Qa)
Permits/Certificates 1. 2115	City of Poulsbo	9/24/41	Westside Well (Transferred from Crystal Springs)	Primary	539 gpm	867 afy	1600 gpm	170 afy	+ 1,518 gpm	+ 706 afy
2. 5585	City of Poulsbo	7/17/52	Big Valley Springs, inactive	Primary	449 gpm	723 afy		0 afy		+ 723 afy
3. 8525	City of Poulsbo	10/24/60	Big Valley Shallow Wells, inactive	Primary	90 gpm	145 afy		0 afy		+ 145 afy
4. 6087	City of Poulsbo	12/30/66	Lincoln Well 1	Supplemental	475 gpm	396 afy		340 afy		+ 56 afy
5. G1-00643C	City of Poulsbo	2/13/69	Bus Barn Well, (Back Up Source)	Supplemental	100 gpm	160 afy		0 afy		+ 160 afy
6. G1-23707C	City of Poulsbo	10/14/80	Big Valley Well No. 1	Supplemental	215 gpm	344 afy		39 afy		+ 305 afy
7. G1-25375P	City of Poulsbo	1/10/89	Pugh Well/ Lincoln Well 2	Yes, the 2009 report of examination lists 735 afy as supplemental.	650 gpm	158 afy		95 afy		+ 640 afy
8. G1-27192P	City of Poulsbo	6/16/93	Big Valley Well No. 2	Supplemental	600 gpm	672 afy		478 afy		+ 194 afy
TOTAL	**********	*********	*********	**********	3,118 gpm	1,893 afy	1,600 gpm	1,122 afy	+ 1,518 gpm	+ 771 afy

INTERTIE NAME/ IDENTIFIER	NAME OF PURVEYOR PROVIDING WATER	EXISTING LIMITS ON INTERTIE USE		EXISTING CONSUMPTION THROUGH INTERTIE		CURRENT INTERTIE SUPPLY STATUS (Excess/Deficiency)	
		Maximum Instantaneous Flow Rate (Qi)	Maximum Annual Volume (Qa)	Maximum Instantaneous Flow Rate (Qi)	Maximum Annual Volume (Qa)	Maximum Instantaneous Flow Rate (Qi)	Maximum Annual Volume (Qa)
1. Vinland Intertie	Kitsap County Public Utility District No. 1	120 gpm	NA	0 gpm	0 afy	+ 120 gpm	NA
2.							
3.							
4.							
TOTAL	**********						

PENDING WATER RIGHT	NAME ON	DATE	ANY PORTION	PENDING WATER RIGHTS

APPLICATION (New/Change)	APPLICATION	SUBMITTED	SUPPLEMENTAL? (If yes, explain in footnote)	Maximum Instantaneous Flow Rate (Qi) Requested	Maximum Annual Volume (Qa) Requested
1.					
2.					
3.					
4.					

If you need this publication in an alternate format, call (800) 525-0127. For TTY/TDD call (800) 833-6388.

DOH Form 331-371 (Updated 08/10)

To return form, please see reverse side.

Washington State Department of Health
Division of Environmental Health
Office of Drinking Water

Table 2

WATER SYSTEM PLAN
WATER RIGHTS SELF ASSESSMENT – 6 YEAR FORECAST

PERMIT CERTIFICATE OR CLAIM #	NAME ON DOCUMENT	PRIORITY DATE (List oldest first)	SOURCE NAME/ NUMBER	ANY PORTION SUPPLEMENTAL? (If yes, explain in footnote)	EXISTING WATER RIGHTS		FORECASTED WATER USE FROM SOURCES (6-year Demand)		FORECASTED WATER RIGHT STATUS (Excess/Deficiency)	
					Maximum Instantaneous Flow Rate (Qi)	Maximum Annual Volume (Qa)	Maximum Instantaneous Flow Rate (Qi)	Maximum Annual Volume (Qa)	Maximum Instantaneous Flow Rate (Qi)	Maximum Annual Volume (Qa)
Permits/Certificates 1. 2115	City of Poulsbo	9/24/41	Westside Well (Transferred from Crystal Springs)	Primary	539 gpm	867 afy	1,810 gpm	317 afy	+ 1,308 gpm	+ 550 afy
2. 5585	City of Poulsbo	7/17/52	Big Valley Springs, inactive	Primary	449 gpm	723 afy		0 afy		+ 723 afy
3. 8525	City of Poulsbo	10/24/60	Big Valley Shallow Wells, inactive	Primary	90 gpm	145 afy		0 afy		+ 145 afy
4. 6087	City of Poulsbo	12/30/66	Lincoln Well 1	Supplemental	475 gpm	396 afy		127 afy		+ 269 afy
5. G1-00643C	City of Poulsbo	2/13/69	Bus Barn Well, (Back Up Source)	Supplemental	100 gpm	160 afy		0 afy		+ 160 afy
6. G1-23707C	City of Poulsbo	10/14/80	Big Valley Well No. 1	Supplemental	215 gpm	344 afy		38 afy		+ 306 afy
7. G1-25375P	City of Poulsbo	1/10/89	Pugh Well/ Lincoln Well 2	Yes, the 2009 report of examination lists 735 afy as supplemental.	650 gpm	158 afy		317 afy		+ 418 afy
8. G1-27192P	City of Poulsbo	6/16/93	Big Valley Well No. 2	Supplemental	600 gpm	672 afy		470 afy		+ 202 afy
TOTAL	**********	*********	*********	**********	3,118 gpm	1,893 afy	1,810 gpm	1,269 cfy	+ 1,308 gpm	+ 624 afy

INTERTIE NAME/ IDENTIFIER	NAME OF PURVEYOR PROVIDING WATER	EXISTING LIMITS ON INTERTIE USE		FORECASTED CONSUMPTION THROUGH INTERTIE		FORECASTED INTERTIE SUPPLY STATUS (Excess/Deficiency)	
		Maximum Instantaneous Flow Rate (Qi)	Maximum Annual Volume (Qa)	Maximum Instantaneous Flow Rate (Qi)	Maximum Annual Volume (Qa)	Maximum Instantaneous Flow Rate (Qi)	Maximum Annual Volume (Qa)
1. Vinland Intertie	Kitsap County Public Utility District No. 1	120 gpm	NA	0 gpm	0 afy	0 gpm	NA
2.							
3.							
4.							

TOTAL	**********					
PENDING WATER RIGHT APPLICATION (New/Change)	NAME ON APPLICATION	DATE SUBMITTED	ANY PORTION SUPPLEMENTAL? (If yes, explain in footnote)	PENDING WATER RIGHTS		
				Maximum Instantaneous Flow Rate (Qi) Requested	Maximum Annual Volume (Qa) Requested	
1.						
2.						
3.						
4.						

If you need this publication in an alternate format, call (800) 525-0127. For TTY/TDD call (800) 833-6388.

DOH Form 331-372 (Updated 08/10)

To return form, please see reverse side.

Washington State Department of Health
Division of Environmental Health
Office of Drinking Water

Table 3

WATER SYSTEM PLAN
WATER RIGHTS SELF ASSESSMENT – 20 YEAR FORECAST

PERMIT CERTIFICATE OR CLAIM #	NAME ON DOCUMENT	PRIORITY DATE (List oldest first)	SOURCE NAME/ NUMBER	ANY PORTION SUPPLEMENTAL? (If yes, explain in footnote)	EXISTING WATER RIGHTS		FORECASTED WATER USE FROM SOURCES (20-year Demand)		FORECASTED WATER RIGHT STATUS (Excess/Deficiency)	
					Maximum Instantaneous Flow Rate (Qi)	Maximum Annual Volume (Qa)	Maximum Instantaneous Flow Rate (Qi)	Maximum Annual Volume (Qa)	Maximum Instantaneous Flow Rate (Qi)	Maximum Annual Volume (Qa)
Permits/Certificates 1. 2115	City of Poulsbo	9/24/41	Westside Well (Transferred from Crystal Springs)	Primary	539 gpm	867 afy	2,300 gpm	403 afy	+ 818 gpm	+ 464 afy
2. 5585	City of Poulsbo	7/17/52	Big Valley Springs, inactive	Primary	449 gpm	723 afy		0 afy		+ 723 afy
3. 8525	City of Poulsbo	10/24/60	Big Valley Shallow Wells, inactive	Primary	90 gpm	145 afy		0 afy		+ 145 afy
4. 6087	City of Poulsbo	12/30/66	Lincoln Well 1	Supplemental	475 gpm	396 afy		161 afy		+ 235afy
5. G1-00643C	City of Poulsbo	2/13/69	Bus Barn Well, (Back Up Source)	Supplemental	100 gpm	160 afy		0 afy		+ 160 afy
6. G1-23707C	City of Poulsbo	10/14/80	Big Valley Well No. 1	Supplemental	215 gpm	344 afy		48 afy		+ 296 afy
7. G1-25375P	City of Poulsbo	1/10/89	Pugh Well/ Lincoln Well 2	Yes, the 2009 report of examination lists 735 afy as supplemental.	650 gpm	158 afy		403 afy		+ 332 afy
8. G1-27192P	City of Poulsbo	6/16/93	Big Valley Well No. 2	Supplemental	600 gpm	672 afy		597 afy		+ 75 afy
TOTAL	**********	*********	*********	**********	3,118 gpm	1,893 afy	2,300 gpm	1,612 cfy	+ 818 gpm	+ 281 afy

INTERTIE NAME/ IDENTIFIER	NAME OF PURVEYOR PROVIDING WATER	EXISTING LIMITS ON INTERTIE USE		FORECASTED CONSUMPTION THROUGH INTERTIE		FORECASTED INTERTIE SUPPLY STATUS (Excess/Deficiency)	
		Maximum Instantaneous Flow Rate (Qi)	Maximum Annual Volume (Qa)	Maximum Instantaneous Flow Rate (Qi)	Maximum Annual Volume (Qa)	Maximum Instantaneous Flow Rate (Qi)	Maximum Annual Volume (Qa)
1. Vinland Intertie	Kitsap County Public Utility District No. 1	120 gpm	NA	0 gpm	0 afy	0 gpm	NA
2.							
3.							
4.							

TOTAL	**********					
PENDING WATER RIGHT APPLICATION (New/Change)	NAME ON APPLICATION	DATE SUBMITTED	ANY PORTION SUPPLEMENTAL? (If yes, explain in footnote)	PENDING WATER RIGHTS		
				Maximum Instantaneous Flow Rate (Qi) Requested	Maximum Annual Volume (Qa) Requested	
1.						
2.						
3.						
4.						

If you need this publication in an alternate format, call (800) 525-0127. For TTY/TDD call (800) 833-6388.

DOH Form 331-373 (Updated 08/10)

To return form, please see reverse side.

Washington State Department of Health
Division of Environmental Health
Office of Drinking Water

WATER FACILITIES INVENTORY (WFI) FORM

Quarter: 1
Updated: 12/13/2012
Printed: 07/17/2014
WFI Printed For: Annual
Submission Reason: Treatment Update

ONE FORM PER SYSTEM

RETURN TO: Southwest Regional Office, PO Box 47823, Olympia, WA, 98504

1. SYSTEM ID NO.	2. SYSTEM NAME	3. COUNTY	4. GROUP	5. TYPE
69150 6	POULSBO, CITY OF	KITSAP	A	Comm

6. PRIMARY CONTACT NAME & MAILING ADDRESS

KEITH A. SVARTHUMLE [UTILITIES FOREMAN]
200 NE MOE ST
POULSBO, WA 98370

STREET ADDRESS IF DIFFERENT FROM ABOVE

ATTN
ADDRESS
CITY STATE ZIP

7. OWNER NAME & MAILING ADDRESS — **8. Owner Number** 004664

POULSBO, CITY OF
KEITH A. SVARTHUMLE
200 NE MOE ST
POULSBO, WA 98370

TITLE: UTILITIES FOREMAN

STREET ADDRESS IF DIFFERENT FROM ABOVE

ATTN
ADDRESS
CITY STATE ZIP

9. 24 HOUR PRIMARY CONTACT INFORMATION		10. OWNER CONTACT INFORMATION	
Primary Contact Daytime Phone:	(360) 779-4078	Owner Daytime Phone:	(360) 779-4078
Primary Contact Mobile/Cell Phone:	(360) 536-5926	Owner Mobile/Cell Phone:	(360) 536-5926
Primary Contact Evening Phone:	(360) 779-4078	Owner Evening Phone:	(360) 779-4078
Fax: (360) 697-6796	E-mail: ksvarthumle@cityofpoulsbo.com	Fax: (360) 697-6796	E-mail: ksvarthumle@cityofpoulsbo.com

WAC 246-290-420(9) requires that water systems provide 24-hour contact information for emergencies.

11. SATELLITE MANAGEMENT AGENCY - SMA (check only one)

- [x] Not applicable (Skip to #12)
- [ ] Owned and Managed
- [ ] Managed Only
- [ ] Owned Only

SMA NAME: _____ SMA Number: _____

12. WATER SYSTEM CHARACTERISTICS (mark ALL that apply)

- [ ] Agricultural
- [x] Commercial / Business
- [x] Day Care
- [x] Food Service/Food Permit
- [ ] 1,000 or more person event for 2 or more days per year
- [x] Hospital/Clinic
- [x] Industrial
- [x] Licensed Residential Facility
- [x] Lodging
- [ ] Recreational / RV Park
- [x] Residential
- [x] School
- [ ] Temporary Farm Worker
- [x] Other (church, fire station, etc.): _____

13. WATER SYSTEM OWNERSHIP (mark only one)

- [ ] Association
- [x] City / Town
- [ ] County
- [ ] Federal
- [ ] Investor
- [ ] Private
- [ ] Special District
- [ ] State

14. STORAGE CAPACITY (gallons)

3,050,000

--- SEE NEXT PAGE FOR A COMPLETE LIST OF SOURCES ---

WATER FACILITIES INVENTORY (WFI) FORM - Continued

1. SYSTEM ID NO.	2. SYSTEM NAME	3. COUNTY	4. GROUP	5. TYPE
69150 6	POULSBO, CITY OF	KITSAP	A	Comm

15	16	17	18										19			20	21						22	23	24			
	SOURCE NAME	INTERTIE	SOURCE CATEGORY										USE				TREATMENT						DEPTH		SOURCE LOCATION			
Source Number	LIST UTILITY'S NAME FOR SOURCE AND WELL TAG ID NUMBER. Example: WELL #1 XYZ456 IF SOURCE IS PURCHASED OR INTERTIED, LIST SELLER'S NAME Example: SEATTLE	INTERTIE SYSTEM ID NUMBER	WELL	WELL FIELD	WELL IN A WELL FIELD	SPRING	SPRING FIELD	SPRING IN SPRINGFIELD	SEA WATER	SURFACE WATER	RANNEY / INF. GALLERY	OTHER	PERMANENT	SEASONAL	EMERGENCY	SOURCE METERED	NONE	CHLORINATION	FILTRATION	FLUORIDATION	IRRADIATION (UV)	OTHER	DEPTH TO FIRST OPEN INTERVAL IN FEET	CAPACITY (GALLONS PER MINUTE)	1/4, 1/4 SECTION	SECTION NUMBER	TOWNSHIP	RANGE
S01	InAct 07/31/1997 BIG VALLEY					X									X	N		X		X				450	NW SW	02	26N	01E
S02	LINCOLN WELL AAB481		X										X			Y		X		X			299	~~450~~	NW NE	13	26N	01E
S03	91923/VINLAND	91923 K											X			Y	X							120	SW SW	10	26N	01E
S04	BIG VALLEY USGS 1 AAB254		X										X			Y		X		X			302	200	NE SW	02	26N	01E
S05	PUGH WELL AAB482		X										X			Y		X		X			280	~~590~~	SE NE	13	26N	01E
S06	BIG VALLEY #2 AAC682		X										X			Y		X		X			455	~~600~~	NW SW	02	26N	01E
S07	FINN HILL/NIKE WELL AAB480		X										X			Y	X						108	100	SW SW	10	26N	01E
S08	WESTSIDE WELL AEC928		X										X			Y		X		X			610	500	SE NE	03	26N	01E

S-02 = 475 gpm
S-06 = 520 gpm
S-05 = 480 gpm

WATER FACILITIES INVENTORY (WFI) FORM - Continued

1. SYSTEM ID NO.	2. SYSTEM NAME	3. COUNTY	4. GROUP	5. TYPE
69150 6	POULSBO, CITY OF	KITSAP	A	Comm

	ACTIVE SERVICE CONNECTIONS	DOH USE ONLY! CALCULATED ACTIVE CONNECTIONS	DOH USE ONLY! APPROVED
25. SINGLE FAMILY RESIDENCES (How many of the following do you have?)	0	4086	5188
A. Full Time Single Family Residences (Occupied 180 days or *more* per year) Residential 2741	~~2607~~		
B. Part Time Single Family Residences (Occupied *less than* 180 days per year) outside city + 16	0		
26. MULTI-FAMILY RESIDENTIAL BUILDINGS (How many of the following do you have?)			
A. Apartment Buildings, condos, duplexes, barracks, dorms 139	~~135~~		
B. Full Time Residential Units in the Apartments, Condos, Duplexes, Dorms that are occupied *more than* 180 days/year	1479		
C. Part Time Residential Units in the Apartments, Condos, Duplexes, Dorms that are occupied *less than* 180 days/year outside city	0		
27. NON-RESIDENTIAL CONNECTIONS (How many of the following do you have?)			
A. Recreational Services and/or Transient Accommodations (Campsites, RV sites, hotel/motel/overnight units) commercial + 2	651	651	0
B. Institutional, Commercial/Business, School, Day Care, Industrial Services, etc. irrigation + 166 325	~~301~~	301	0
28. TOTAL SERVICE CONNECTIONS		5038	5188

29. FULL-TIME RESIDENTIAL POPULATION

A. How many residents are served by this system 180 or *more* days per year? ~~7840~~ 9388

30. PART-TIME RESIDENTIAL POPULATION	JAN	FEB	MAR	APR	MAY	JUN	JUL	AUG	SEP	OCT	NOV	DEC
A. How many part-time residents are present each month?												
B. How many days per month are they present?												

31. TEMPORARY & TRANSIENT USERS	JAN	FEB	MAR	APR	MAY	JUN	JUL	AUG	SEP	OCT	NOV	DEC
A. How many total visitors, attendees, travelers, campers, patients or customers have access to the water system each month?	90000	90000	90000	90000	90000	90000	90000	90000	90000	90000	90000	90000
B. How many days per month is water accessible to the public?	30	30	30	30	30	30	30	30	30	30	30	30

32. REGULAR NON-RESIDENTIAL USERS	JAN	FEB	MAR	APR	MAY	JUN	JUL	AUG	SEP	OCT	NOV	DEC
A. If you have schools, daycares, or businesses connected to your water system, how many students daycare children and/or employees are present each month?	3000	3000	3000	3000	3000	100	100	100	3000	3000	3000	3000
B. How many days per month are they present?	20	20	20	20	20	20	20	20	20	20	20	20

33. ROUTINE COLIFORM SCHEDULE	JAN	FEB	MAR	APR	MAY	JUN	JUL	AUG	SEP	OCT	NOV	DEC
	15	15	15	15	15	10	10	10	15	15	15	15

35. Reason for Submitting WFI:

☑ Update - Change ☐ Update - No Change ☐ Inactivate ☐ Re-Activate ☐ Name Change ☐ New System ☐ Other _____

36. I certify that the information stated on this WFI form is correct to the best of my knowledge.

SIGNATURE: [signature] DATE: 9-10-14

PRINT NAME: Keith Svarthumle TITLE: Utilities Forman

APPENDIX C

WATER RIGHT DOCUMENTATION AND WELLHEAD PROTECTION PLAN

Avondale Glen HOA
P.O. Box 175
Poulsbo, WA 98370

Snowberry Enterprises, LLC
9183 Holly Farm Ln NE
Bainbridge Island, WA 98110

Cenex Inc
P.O. Box 275
Poulsbo, WA 98370

KCCHA-Housing Kitsap
345 6th Street Ste 100
Bremerton, WA 98337-1891

Jantz Engineering
20555 Pugh Rd NE
Poulsbo, WA 98370

Jon Brand
KC Dept of Public Works
614 Division St, MS-26
Port Orchard, WA 98366-4699

North Kitsap Auto Rebuild
22173 Viking Way NW
Poulsbo, WA 98370-9445

Liberty Bay Dental Center
20855 Bond Rd NE
Poulsbo, WA 98370

Sprint Communications Co
Poulsbo 2
75 NW Thompson Rd
Poulsbo, WA 98370-9443

Kastor Road Site
3190 160th Ave SE
Bellevue, WA 98008-5452

Lofall Maintenace Site
SR 3 MP 56.0E
Poulsbo, WA 98370

NK School Dist-Maintenance
1365 Finn Hill Rd
Poulsbo, WA 98370

PSE Poulsbo SVC
22887State Hwy 3 NW
Poulsbo, WA 98370

Summerset Development LLC
P.O. 2879
Poulsbo, WA 98370

United Telephone Co of the NW
1545 Sherman Hill Rd
Poulsbo, WA 98370

Tony Bush, Wetlands Program
WSDOT, Env Serv Office
P.O. Box 47332
Olympia, WA 98504

City of Poulsbo

Public Works Department

September 18, 2014

Jantz Engineering
20555 Pugh Rd NE
Poulsbo, WA 98370

Dear Jantz Engineering:

To protect the drinking water supply for the customers of Lincoln Well and Pugh Well, we are developing a wellhead protection program as required by state law. As part of our wellhead protection program, we mapped the area overlying the short-term recharge zone of our drinking water supply wells. This is called our wellhead protection area.

Following the mapping of the wellhead protection area, we conducted an inventory of **potential** groundwater contamination sources within the area. The nature of your business and its location within our wellhead protection area means that your activities have the potential to affect our customers' drinking water supply.

We have notified the agency or agencies that regulate(s) your type of business/facility that you are in our wellhead protection area. You should contact them to request technical assistance to help manage your business in a way that will best prevent groundwater contamination. We realize you are already careful to protect the environment as you conduct your business. We hope that learning that you are in our wellhead protection area will result in more precautions to ensure that your activities will not affect our drinking water quality.

Sincerely,

Keith Svarthumle
Utilities Forman

Attachment

200 NE Moe Street ♦ Post Office Box 2275 ♦ Poulsbo, Washington 98370
(360) 779-4078 ♦ fax (360) 697-8269
www.cityofpoulsbo.com ♦ ksvarthumle@cityofpoulsbo.com

City of Poulsbo

Public Works Department

September 18, 2014

Jon Brand
Kitsap County Public Works
614 Division St, MS-26
Port Orchard, WA 98366-4699

Dear Jon Brand:

We are writing to let you know that Kitsap County North Road Shop you regulate is within our public water system wellhead protection area. Please take all reasonable steps to ensure that land use activities within this area do not contaminate our drinking water sources.

Our water company has 3,205 service connections, and serves about 9,388 people. The Washington State Department of Health rated our system as "susceptible".

The enclosed map shows the 6-month and 1-, 5- and 10-year time-of-travel boundaries for our wellhead protection area. We're also sending you a list of the facilities or activities of concern. Any groundwater contamination that occurs within this wellhead protection area has a high potential to reach our well.

Thank you for your support in protecting our drinking water.

Sincerely,

Keith Svarthumle
Utilities Forman

Attachment

200 NE Moe Street ♦ Post Office Box 2275 ♦ Poulsbo, Washington 98370
(360) 779-4078 ♦ fax (360) 697-8269
www.cityofpoulsbo.com ♦ ksvarthumle@cityofpoulsbo.com

Crystal Springs

S. F. No. 369—3-43—5C. 3445.

CERTIFICATE RECORD NO. 5, PAGE NO. 2115

STATE OF WASHINGTON, COUNTY OF Kitsap

CERTIFICATE OF WATER RIGHT

(In accordance with the provisions of Chapter 117, Laws of Washington for 1917, and the rules and regulations of the State Supervisor of Hydraulics thereunder.)

This is to certify, that The Town of Poulsbo *of* Poulsbo, *State of* Washington, *has made proof to the satisfaction of the State Supervisor of Hydraulics of Washington, of a right to the use of the waters of* an unnamed stream, *a tributary of* , *for the purposes of* municipal supply *under* Appropriation *Permit No.* 3524 *issued by the State Supervisor of Hydraulics, and that said right to the use of said waters has been perfected in accordance with the laws of Washington, and is hereby confirmed by the State Supervisor of Hydraulics of Washington and entered of record in Volume* 5, *at Page* 2115, *on the* 26th *day of* December, 1944; *that the right hereby confirmed dates from* September 24, 1941; *that the amount of water to which such right is entitled and hereby confirmed, for the purposes aforesaid, is limited to an amount actually beneficially used for said purposes, and shall not exceed* 1.2 of a cubic foot per second

A description of the lands under such right to which the water hereby confirmed is appurtenant, and the place where such water is put to beneficial use, is as follows:

PLACE OF USE			LEGAL SUBDIVISION	FOR IRRIGATION	
Section	Township	Range		No. Acres Described in Permit	No. Acres Actually Irrigated

LOCATION OF POWER PLANT			LEGAL SUBDIVISION	FOR POWER	
Section	Township	Range		H. P. Described in Permit	H. P. Actually Developed

Section	Township	Range	LEGAL SUBDIVISION	FOR OTHER USES
23	26 N.	1 E.W.M.	Town of Poulsbo	municipal supply

The right to the use of the water aforesaid hereby confirmed is restricted to the lands or place of use herein described, except as provided in Section 39, Chapter 117, Session Laws 1917.

WITNESS the seal and signature of the State Supervisor of Hydraulics affixed this 26th *day of* December, 1944.

Geo. Partlow

PROGRESS SHEET

Name: Town of Poulsbo
Washington

Assigned to:
Date:

APPLI. NO. 5585 PERMIT NO. 5524 CERT. NO. 2115

Appli. received 9-24-41 Initial Exam. fee received 9-24-41
Appli. returned for completion or correction _____ Received _____
Statement of add. exam. fee sent _____ Amount _____
Additional examination fee received _____.

Application amended _____
Application cancelled _____

O.K'd for publication by J. TOM Date Oct. 27, 1941
Notice of Water Right Application sent 10-27-41
Protests filed _____
Affidavit of Publication received and checked 12-8-41
APPROVED BY DEPT. OF PUBLIC WORKS
Temporary Permit issued _____ to _____
Protested - Hearing - withdrawn 5-5-42
Examination made April 27, 1942 by J. R. Ayre
APPROVED BY DEPT. OF PUBLIC WORKS
O.K.'d for Permit " " 28, 1942 by J. R. Ayre

Statement of filing and recording fee sent 4-28-42 Amount $10.00
Filing and recording fee received 5-5-42
Permit issued 5-5-42 No. 5524

Notice of Beginning of Construction sent 5-5-42
Time for " " " extended to _____ Fee _____
Notice of " " " filed 12-9-44

Notice of Completion sent _____
Time for " of Construction extended to _____
Notice of " " " filed 12-9-44 with notice of beginning

Notice of Complete Application of Water sent 12-9-44
Time for " " " " extended to _____
Notice of " " " " filed 12-23-44

Proof of Appropriation sent 12-9-44; filed 12-23-44

Statement of fee for final certificate sent 12-9-44 Amount $1.40
Fee received 12-23-44
Final Certificate of Water Right Issued 12-26-44 No. 2115

Original to Clerk Office 2-15-06 RH

Westside Well

STATE OF WASHINGTON

DEPARTMENT OF ECOLOGY

Northwest Regional Office • 3190 160th Avenue SE • Bellevue, Washington 98008-5452 • (425) 649-7000

AUG 26 2003

CERTIFIED MAIL
7000 1670 0011 1567 1733

Mr. William Duffy
Public Works Department
P O Box 2275
Poulsbo, WA 98370-2275

Dear Mr. Duffy:

Re: Surface Water Right Change No. SWC-2115

Enclosed is Report of Examination of Application for Change of Water Right No. SWC-2115.

Your application for change has been approved. A superseding certificate will not be issued until water has been put to full beneficial use and a final investigation is made. Please note the development schedule on the enclosed Report of Examination that indicates the amount of time allowed for you to make the changes to your system. This letter and the enclosed Report of Examination constitute our determination and order.

This Order may be appealed pursuant to RCW Chapter 43.21B. The person to whom this Order is issued must file an appeal with the Pollution Control Hearings Board **within thirty (30) days of receipt of this Order.** Send the appeal to: Pollution Control Hearings Board, P.O. Box 40903, Olympia, Washington 98504-0903. At the same time, a copy of the appeal **must** be sent to: Department of Ecology, Water Resources Appeals Coordinator, P.O. Box 47600, Olympia, Washington 98504-7600. All others receiving notice of this Order must file an appeal with the Pollution Control Hearings Board within **thirty (30) days of the date the Order was mailed** in the same manner described above. An appeal alone will not stay the effectiveness of this Order. Stay requests must be submitted in accordance with RCW 43.21B.320.

If you have any questions or concerns on the above information, please call the Department of Ecology at (425) 649-7000.

Sincerely,

Daniel L. Swenson
Water Resources Supervisor
Northwest Regional Office
DLS:ng
Enclosures

I certify that I mailed this Report of Examination for Application For Change of Water Right No. SWC-2115, or an identical copy thereof, postage prepaid, to the above addressee(s) this 26th **day of** August **2003.** Nancy Jones **(signature)**

State Water Code

Chapters 90.03 and 90.44 RCW authorize the appropriation of public water for beneficial use and describe the process for obtaining water rights including the process to amend or change existing rights. Laws specifically governing the water right permitting process are RCW 90.03.250 through 90.03.340 and RCW 90.44.060. Changes or amendments to these rights are covered under RCW 90.03.380 and RCW 90.44.100. Prioritization of water rights processing is the subject of chapter 173-152 WAC.

Existing Rights for the City of Poulsbo Water System

The City of Poulsbo holds six (6) certificates of water right and two water rights permits (Table 1). Three surface water rights, certificate numbers 2115, 5585, and 8525, are primary water rights. The remaining water rights are supplementary water rights, which share annual quantity with the primary rights.

Until recently the Department of Ecology issued supplementary water rights when it was determined that a purveyor needed pumping capacity to meet short term demand but already had sufficient annual quantities. In the case of Poulsbo, these annual quantities, although not quantified under its certificates, have a limitation of 1,734 acre-feet per year (afy) based on all three rights operating to their full rate of diversion continuously.

Table 1: Poulsbo Water Rights

File #	Cert #	Source Name	P/S*	Doc Type	Priority Date	Qi (cert)	Qi (gpm)	Qa (S)	Qa (P)
S1-*05585C	2115	Crystal Springs	P	Certificate	24-Sep-41	1.2 cfs	539	--	867
S1-*11528C	5585	Big Valley Springs 1	P	Certificate	17-Jul-52	1.0 cfs	449	--	723
S1-*16431C	8525	Big Valley Springs 2	P	Certificate	24-Oct-60	0.20 cfs	90	--	145
G1-*08457C	6087	Lincoln Hill Wells	S	Certificate	30-Dec-66	475 gpm	475	396	
G1-00643C	--	Nike Well	S	Certificate	13-Feb-69	100 gpm	100	160	
G1-23707C	--	Big Valley Well #1	S	Certificate	14-Oct-80	215 gpm	215	344	
G1-25375P	--	Pugh Road Well	S	Permit	10-Jan-89	650 gpm	650	735	
G1-27192P	--	Big Valley Well #2	S	Permit	15-Jun-93	600 gpm	600	672	
						Total	2040	2307	1734

P= Primary; S=Supplemental

All five of Poulsbo's groundwater rights have been issued as supplementary water rights. An examination of the water right documents reveals that all five were issued to allow the city to provide more pumping capacity while not adding any independent annual quantity to Poulsbo's water rights. This means that the city's maximum Qa cannot exceed 1,734 afy even though the sum total of maximum Qa allowed for all wells is 2,307 afy.

Other Water Rights in the Vicinity

A search of Ecology records reveals ten (16) water rights certificates and permits within sections 1, 2, 10 and 11 of Township 26 North, Range 1 East W.M. (Table 2). This list does not include rights held by the City of Poulsbo within the area that are included in Table 1.

Table 2: Water Rights in area of proposed Westside #1 Well

File#	Primary	Priority DT	Purposes†	Qi (gpm)	Qa (afy)	TRS	QQ	Q
G1-20745C	KLINKERT ROBERT C	7/10/1973	IR,DS	30	20	T26N-R1E-S01		
G1-22715C	PAVEY H S & M F	7/7/1976	ST,IR,DS	30	8	T26N-R1E-S01	NE	NW
G1-24855C	Stottlemeyer Water	7/2/1986	DM	50	4	T26N-R1E-S01	SE	NE
G1-25512C	Gamble Bay Water	9/5/1989	DM	55	18.5	T26N-R1E-S01	SE	SW
G1-25734P	Fredricks Short Plat Water	6/11/1990	DM	40	3.5	T26N-R1E-S01		
S1-*06509C	TOPOLINSKI B W	7/2/1945	IR	0.1*	--	T26N-R1E-S02	N1/2	SW
S1-*06992C	MUNRO J	3/21/1946	IR	0.3*	--	T26N-R1E-S02	NE	SW
S1-*08941C	ESPELUND A O	7/28/1949	ST,IR	0.06*	--	T26N-R1E-S02	E1/2	SW
S1-20672C	MORGAN JACK W	5/31/1973	IR,DS	0.1*	32	T26N-R1E-S02	SE	NE
G1-22015C	FLEVRY ALLAN	7/23/1974	IR,DM	60	20	T26N-R1E-S02	SE	NE
G1-23729C	Mutual Of Seattle	12/24/1980	DM	75	10.5	T26N-R1E-S03	SE	NE
G1-25670C	SWANKE DAVID	4/6/1990	DM	35	4.5	T26N-R1E-S03	SW	SE
G1-*06618C	KASTER C W	2/18/1963	DM	225	45	T26N-R1E-S10	SW	SW
G1-00247C	KASTER R I AND C W	10/29/1971	DM	225	5.6	T26N-R1E-S10	SW	SW
G1-22724C	Sanderson & Associates Inc	7/29/1976	DM	170	45	T26N-R1E-S10		
G1-013097CL	ESPLUND	4/15/1932	IR,DG	20	16.5	T26N-R1E-S02	SE	SW
G1-096941CL	N KITSAP LITTLE LEAGUE	5/1/1969	IR,DG	30	6	T26N-R1E-S03	SE	NE
G1-019474CL	MENDENHALL	6/1/1972	IR,DG	18	2.5	T26N-R1E-S03	SE	NW
G1-007387CL	RYAN	8/1/1930	IR,DG	20	17.1	T26N-R1E-S11	NE	NW
G1-004377CL	RYAN	4/1/1969	IR,DG	20	17.1	T26N-R1E-S11	NE	NW

†IR=Irrigation; ST=Stockwatering; DS=Single Domestic; DM=Multiple Domestic
*Qi in cubic feet per second (cfs)

Site Visit

A visit to the sites of the original point of diversion and new Westside #1 Well was conducted on February 28, 2003. Ecology water rights investigator Douglas H. Wood, LHG was accompanied by Mr. William Duffy of the City of Poulsbo Public Works Department and by Mr. Douglas Dow, LHG of Robinson and Noble, Inc., consulting firm for the city.

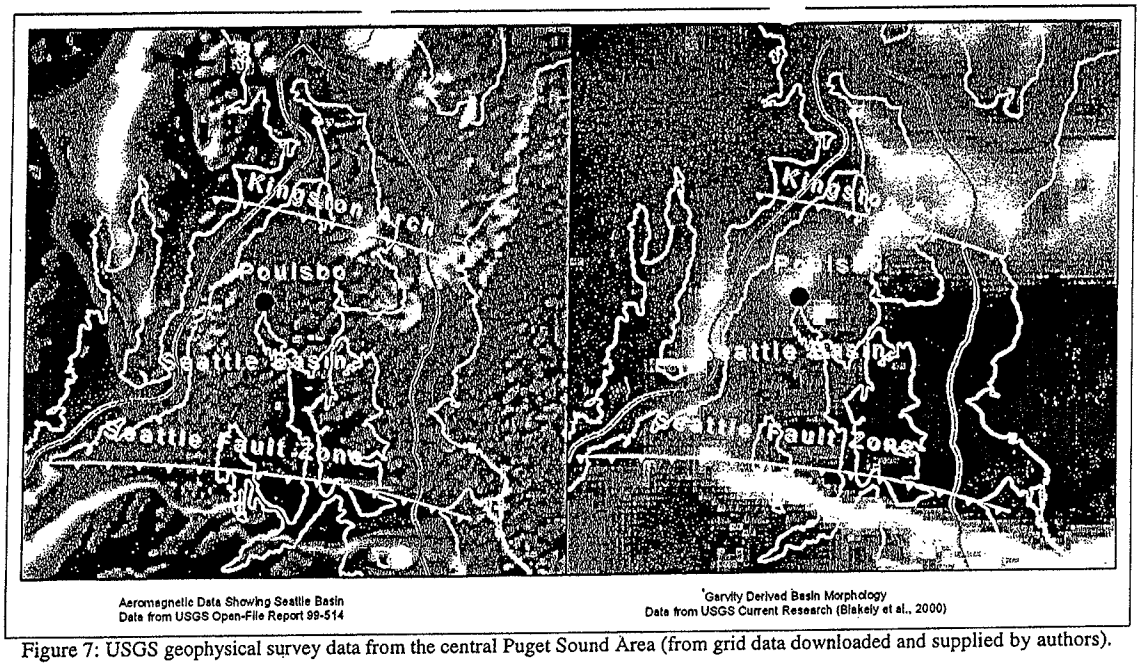

Figure 7: USGS geophysical survey data from the central Puget Sound Area (from grid data downloaded and supplied by authors).

Based on the above, it is reasonable to consider the three principal aquifers underlying the Poulsbo area as a single body of groundwater thus complying with the requirement of RCW 90.44.100 that new points of withdrawal tap the same body of public groundwater.

Potential for Different Impacts on the Water Source

The deep aquifer system has not been extensively utilized in the Poulsbo area. Its presence and productivity are not well established but appear to be related to the abundance of permeable unconsolidated glacial sediments of the Possession and/or Double Bluff drifts deposited during pre-Vashon glacial advances (80,000 to 250,000 years before present).

Beneficial Use

Municipal Supply is included as one of several beneficial uses of water described in RCW 90.54.020.

DISCUSSION

One issue related to the requested change in point of withdrawal stands out - availability of the quantities of water under this right within the Deep Aquifer.

Construction of an additional well or wells would likely be required to allow the full amount under the right to be utilized. In addition, given the lack of clear information on the sustainability of the aquifer, it would be prudent for the City of Poulsbo and other area water purveyors to carefully monitor long-term water levels in the Deep Aquifer.

The City of Poulsbo, in consultation with Ecology, has proposed that such a monitoring program include five deep aquifer wells (see Table 7). In addition the city proposes to monitor water levels in the shallow Dogfish Valley Aquifer (Qvr + Qal) using existing city shallow wells in the vicinity of the Big Valley wells.

Table 7: Proposed Deep Aquifer Monitoring Wells

Well No.	Depth (ft)	Surface Elev. (ft)†	Completion Elev. (ft)	SWL Elev. (ft)
Westside #1	710	298	-302 to -412	81
Big Valley 2	537	80	-376 to -435	62
Clear Ck. (TW)	604	415	-135 to -185	43
Vinland 2 (KPUD) *	687	334	-314 to -351	40
Keyport MW (KPUD) *	1,070	230	-790 to -830	40

*City of Poulsbo in cooperation with Kitsap Public Utility District #1
† Elevation above mean sea level.

RECOMMENDATIONS

I recommend that the request for change to SWC-2115 be approved, subject to the provisions and conditions listed below:

The quantities approved for change are 539 gallons per minute (Qi) and 867 acre-feet per year (Qa).

The amount of water granted is a maximum limit that shall not be exceeded through the use of WW#1 and any other wells constructed as part of this proposed change or in combination with withdrawals through supplemental water rights utilizing the quantities under SWC-2115. The water user shall be entitled only to that amount of water within the specified limit that is beneficially used and required.

All remaining withdrawal facilities associated with the original point of withdrawal at Crystal Springs shall be removed and the area surrounding the facilities returned as close to natural conditions as is reasonable feasible.

S. F. No. 369—3-51—75C. 27755.

088040

CERTIFICATE RECORD NO. 12, PAGE NO. 5585

VOL 3 PAGE 165

STATE OF WASHINGTON, COUNTY OF Kitsap

CERTIFICATE OF SURFACE WATER RIGHT

(In accordance with the provisions of Chapter 117, Laws of Washington for 1917, and amendments thereto, and the rules and regulations of the State Supervisor of Water Resources thereunder.)

This is to certify that TOWN OF POULSBO *of* Poulsbo, *State of* Washington, *has made proof to the satisfaction of the State Supervisor of Water Resources of Washington, of a right to the use of the waters of* unnamed springs, *a tributary of* Dogfish Creek, *with point or points of diversion within the* NE¼ of SW¼ of *Sec.* 2, *Twp.* 26 *N., R.* 1 E., *W. M., under and subject to provisions contained in* Appropriation *Permit No.* 8499 *issued by the State Supervisor of Water Resources, and that said right to the use of said waters has been perfected in accordance with the laws of Washington, and is hereby confirmed by the State Supervisor of Water Resources of Washington and entered of record in Volume* 12, *at Page* 5585, *on the* 6th *day of* January, *19* 54, *that the priority date of the right hereby confirmed is* July 17, 1952; *that the amount of water under the right hereby confirmed, for the following purposes is limited to an amount actually beneficially used and shall not exceed*

1.0 cubic foot per second for the purpose of municipal supply.

A description of the lands under such right to which the water right is appurtenant, and the place where such water is put to beneficial use, is as follows:

Town of Poulsbo, Kitsap County, Washington.

The right to the use of the water aforesaid hereby confirmed is restricted to the lands or place of use herein described, except as provided in Sections 6 and 7, Chapter 122, Laws of 1929.

WITNESS the seal and signature of the State Supervisor of Water Resources affixed this 6th *day of* January, *19* 54.

Thos J. Griffith

State Supervisor of Water Resources.

STATISTICAL DATA

MGW

Filed for record January 1954 at 2:35 PM Patent of Town of Poulsbo

588540

Permit No. 8499

Certificate of Surface Water Right

3

Recorded in the office of State Supervisor of Water Resources, Olympia, Washington, in Book No. 12 *of Water Right Certificates, on Page* 5585, *on the* 6th *day of* January, *19*54.

STATE OF WASHINGTON,
County of _____ } *ss.*

I certify that the within was received and duly recorded by me in Volume _____ *of Book of Water Right Certificates, Page* _____ *on the* _____ *day of* _____, *19*____

_____

STATE PRINTING PLANT, OLYMPIA, WASH.

Town of Poulsbo

Form 10. S. F. No. 370—3-51—75C. # 27754.

STATE OF WASHINGTON
DEPARTMENT OF CONSERVATION AND DEVELOPMENT
Division of Water Resources

Permit to Appropriate Public Waters of the State of Washington

Book No. 24 of Permits, on Page 8499 Under Application No. 11528

TOWN OF POULSBO

of Poulsbo, Washington

is hereby granted a permit to appropriate the following described public waters of the State of Washington, subject to existing rights and to the following limitations and provisions: Permittee shall construct and maintain at his own expense a weir, or other suitable device, for measuring any water granted herein for irrigation purposes and such appropriation shall be subject to a reasonable rotation system if ordered by the State Supervisor of Water Resources.

Priority date of this permit is July 17, 1952

Source of the proposed appropriation is unnamed springs

tributary of Dogfish Creek

The quantity of water appropriated shall be limited to the amount which can be beneficially applied and not to exceed 1.0 cubic feet per second, or its equivalent in case of rotation, to be used for the following purposes: municipal supply

as more definitely set out below.

The approximate point of diversion is located 850 feet West and 1400 feet North of South quarter corner of Sec. 2

being within NE¼ of SW¼ of Sec. 2, Twp. 26 N., Rge. 1 E. W. M., county of Kitsap

The use, or uses, to which water is to be applied:

For Domestic Supply and Miscellaneous Uses: ..... cubic feet per second during entire year for ..... to be used within ..... Sec. ....., Twp. ..... N., Rge. ..... W. M.

For Irrigation: ..... cubic feet per second, from ..... to ..... each year, for irrigation of ..... acres, described as follows:

FOR POWER: ..... cubic feet per second continuously each year. Total power to be developed ..... theoretical horse power. Total fall to be utilized ..... feet.

Nature of works by means of which power is to be developed .....

.....

Works to be located in ..... Sec. ....., Twp. ..... N., Rge. ..... W. M.

Water to be returned to .....

Point of return ..... Sec. ....., Twp. ..... N., Rge. ..... W. M.

Use to which power is to be applied .....

FOR MUNICIPAL SUPPLY: 1.0 cubic feet per second during entire year to supply .....

Town of Poulsbo

DESCRIPTION OF DIVERSION WORKS

Height of dam ..... ft.; Length on top ..... ft.; Length on bottom ..... ft.

Material to be used and character of construction .....

.....

Description of headgate .....

CANAL SYSTEM

AT HEADGATE: Width on top (at water line) ..... ft.; Width on bottom ..... ft.; Depth of water ..... ft.; Grade ..... ft. fall per one thousand feet.

AT ..... MILES FROM HEADGATE: Width on top (at water line) ..... ft.; Width on bottom ..... ft.; Depth of water ..... ft.; Grade ..... feet per one thousand feet.

(Please read carefully provisions below)

Construction work shall begin on or before December 1, 1953 and shall thereafter be prosecuted with reasonable diligence and completed on or before December 1, 1954 and complete application of water to proposed uses shall be made on or before December 1, 1955

Given under my hand and the seal of this office at Olympia, Washington, this 10th day of December, 19 52.

Thos. J. Boxhout

State Supervisor of Water Resources

Big Valley Springs

173.

STATE OF WASHINGTON

OFFICE OF SUPERVISOR OF WATER RESOURCES

OLYMPIA

.CE OF GROUND WATER RIGHT APPLICATION NO. 7715

That Town of Poulsbo

of Poulsbo, Washington on July 27, 1965,

filed application for permit to withdraw public ground waters through a horizontal well - infiltration gallery

situated within SW¼SW¼SW¼

of Section 11, *Township* 26 *N., Range* 1 E. *W. M., in* Kitsap *County,*

Area *Sub-area* *Zone*

in the amount of 1,000 *gallons per minute,* ~~xxxxxxxxxxxxxxxxxxxxxxxxxxxxxfeet~~, *subject to existing rights* continuously, *each year for the purpose of* municipal supply

Any objections must be accompanied by a two dollar ($2.00) recording fee and filed with the State Supervisor of Water Resources within thirty (30) days from August 25th, 1965
(Last date of publication)

Witness my hand and official seal this 13th *day of* August, 19 65

M. G. WALKER
State Supervisor of Water Resources.

STATE OF WASHINGTON
Department of Conservation
EARL COE, DIRECTOR
335 GENERAL ADMINISTRATION BUILDING
OLYMPIA

GOVERNOR
DANIEL J. EVANS

DIVISIONS:
RECLAMATION
FLOOD CONTROL
WATER RESOURCES
MINES AND GEOLOGY
COLUMBIA BASIN PROJECT
POWER RESOURCES
WEATHER MODIFICATION

August 13, 1965

Town of Poulsbo
P. O. Box 444
Poulsbo, Washington

Gentlemen:

Re: Ground Water Application No. 7715

Your application for the appropriation of water has been given the above number for our records. Will you please refer to it by number in future correspondence.

Enclosed is a notice of your application which should be published once a week for two consecutive weeks (two publications) in a newspaper of general circulation published in Kitsap County as provided in Chapter 275, Laws of 1953. Such a paper should have general circulation in the locality where the water is to be diverted and used. Publishing the notice in a remote part of the county when not necessary, may be followed by the applicant being instructed to republish in a designated newspaper.

To assure accuracy, it is the responsibility of the applicant to check the notice over carefully before having it published.

mail

After publication, kindly send the affidavit of publication to this office. Publication should start within thirty days from date.

You are also enclosed Well Driller's Record. The Ground Water Code requires that the well driller or other constructor of works furnish a certified record of information.

Very truly yours,

DEPARTMENT OF CONSERVATION

EARL COE, DIRECTOR

MGW: es
Enc.

M. G. Walker

M. G. WALKER, Supervisor
Division of Water Resources

Application to printers 8/16/65 for publication 8/18 + 8/25
Donna will mail affidavit to M. G. Walker + return appl. to us with our affidavit + bill

DANIEL J. EVANS
GOVERNOR

STATE OF WASHINGTON

Department of Conservation

ROY MUNDY, DIRECTOR
335 GENERAL ADMINISTRATION BUILDING
OLYMPIA

DIVISIONS:
RECLAMATION
FLOOD CONTROL
WATER RESOURCES
MINES AND GEOLOGY
COLUMBIA BASIN PROJECT
POWER RESOURCES
WEATHER MODIFICATION
SOIL & WATER CONSERVATION
COMMITTEE

July 28, 1965

Town of Poulsbo
P. O. Box 444
Poulsbo, Washington

Gentlemen:

Receipt is acknowledged of the Town's application for permit to construct a horizontal gallery well in Sec. 11, T. 26 N., R. 1 E.W.M. Your receipt for the examination fee is enclosed herewith.

In reviewing the application it is apparent that the infiltration trench will be constructed very close to Harding Creek and perhaps infilter water from that source. For that reason it is requested that you defer any construction work on the trench until we have had an opportunity to make a field examination and evaluate the effect that the proposed development will have upon existing water rights in that area.

Very truly yours,

DEPARTMENT OF CONSERVATION

Robert H Russell

ROBERT H. RUSSELL, Asst. Supervisor
Division of Water Resources

RHR:bj
Enclosure

STATE OF WASHINGTON
DEPARTMENT OF CONSERVATION

T ? 33230

Olympia, Wash., July 27, 1965

VED FROM Town of Poulsbo

Ten & no/100 DOLLARS 10.00

EDIT: General — Recl. Rev. Weather Mod. S. G. Cash
ATER CODE FEES Mines & Geo. Publications Check —
. R. PUBLICATIONS — Oil & Gas Permits M. O.

A. W. Espen Jr.

DEPARTMENT OF CONSERVATION
By L. Curtis
Fiscal Officer.

GENTLEMEN:

Will you please send a supply of forms for making application for a water right permit, together with section plats and any other information pertaining to this permit.

Sincerely,

Elsie L. Garrison, Clerk Treasurer

S. F. No. 369—1-57—5M. 47579. O.S.

CERTIFICATE RECORD NO. 18, PAGE NO. 8525

STATE OF WASHINGTON, COUNTY OF Kitsap

CERTIFICATE OF SURFACE WATER RIGHT

(In accordance with the provisions of Chapter 117, Laws of Washington for 1917, and amendments thereto, and the rules and regulations of the State Supervisor of Water Resources thereunder.)

This is to certify that TOWN OF POULSBO *of* Poulsbo, *State of* Washington, *has made proof to the satisfaction of the State Supervisor of Water Resources of Washington, of a right to the use of the waters of* Unnamed spring, *a tributary of* Dogfish Creek, *with point or points of diversion within the* NE¼SW¼ *Sec.* 2, *Twp.* 26 *N., R.* 1 E., *W. M., under and subject to provisions contained in* appropriation *Permit No.* 12400 *issued by the State Supervisor of Water Resources, and that said right to the use of said waters has been perfected in accordance with the laws of Washington, and is hereby confirmed by the State Supervisor of Water Resources of Washington and entered of record in Volume* 18, *at Page* 8525, *on the* 24th *day of* August, *19*62 *that the priority date of the right hereby confirmed is* October 24, 1960; *that the amount of water under the right hereby confirmed, for the following purposes is limited to an amount actually beneficially used and shall not exceed* 0.20 of a cubic foot per second for municipal supply.

A description of the lands under such right to which the water right is appurtenant, and the place where such water is put to beneficial use, is as follows:

Incorporated Townsite of Poulsbo

The right to the use of the water aforesaid hereby confirmed is restricted to the lands or place of use herein described, except as provided in Sections 6 and 7, Chapter 122, Laws of 1929.

WITNESS the seal and signature of the State Supervisor of Water Resources affixed this 24th *day of* August, *19*62.

M. J. Walker

State Supervisor of Water Resources.

ENGINEERING DATA

O.K. E.C.L.

Filed for record Aug. 30 1962 at 10 A.M. Request of Dept of Conservation

Margaret McPherson, Kitsap County Auditor. SR

177499

...459
ert of W/R
3

Permit No. 12400

Certificate of Surface Water Right

Recorded in the office of State Supervisor of Water Resources, Olympia, Washington, in Book No. 18 *of Water Right Certificates, on Page* 8525, *on the* 24th *day of* August, *19* 62.

STATE OF WASHINGTON,
County of _____ } *ss.*

I certify that the within was received and duly recorded by me in Volume _____ *of Book of Water Right Certificates, Page* _____ *on the* _____ *day of* _____, *19*____

_____

STATE PRINTING PLANT, OLYMPIA, WASH.

Town of Poulsbo
P.O. Box 444
Poulsbo, Wash
5a

Lanson

S. F. No. 7341—OS—4-67.

CERTIFICATE RECORD NO. 13 PAGE NO. 6087-A

STATE OF WASHINGTON, COUNTY OF Kitsap

Certificate of Ground Water Right

Issued in accordance with the provisions of Chapter 263, Laws of Washington for 1945, and amendments thereto, and the rules and regulations of the Department of Water Resources thereunder.

THIS IS TO CERTIFY *That* TOWN OF POULSBO

of Poulsbo, Washington, *has made proof*

to the satisfaction of the Department of Water Resources of Washington, of a right to the use of the ground waters of a well

located within NW¼NE¼

Sec. 13 *Twp.* 26 *N., R.* 1 E. *W.M.*,

for the purpose of municipal supply

under and subject to provisions contained in Ground Water Permit No. 7804 *issued by the Department of Water Resources and that said right to the use of said ground waters has been perfected in accordance with the laws of Washington, and is hereby confirmed by the Department of Water Resources of Washington and entered of record in Volume* 13 *at page* 6087-A *; that the right hereby confirmed dates from* December 30, 1966 *; that the quantity of ground water under the right hereby confirmed for the purposes aforesaid, is limited to an amount actually beneficially used for said purposes, and shall not exceed* 475 gallons per minute; 396 acre-feet per year, to supply the Town of Poulsbo continuously during entire year.

Special provisions required by the Department of Water Resources: Issued as a supplemental supply to Surface Water Certificates No. 2115, No. 5585, and No. 8525. The total annual withdrawal shall be limited to 396 acre-feet less any amount used under the above rights.

A description of the lands to which such ground water right is appurtenant:

Town of Poulsbo

The right to the use of the water aforesaid hereby confirmed is restricted to the lands or place of use herein described, except as provided in Sections 6 and 7, Chapter 122, Laws of 1929.

This certificate of ground water right is specifically subject to relinquishment for nonuse of water as provided in Section 18, Chapter 233, Laws of 1967.

WITNESS the seal and signature of the Assistant Director, Division of Water Management, Department of Water Resources affixed this 2 *day of* July, *19* 68

Glen H. Fuller

Assistant Director

933438 ✓

Ground Water Permit No. 7804

CERTIFICATE OF GROUND WATER RIGHT

927

Recorded in the Department of Water Resources, Olympia, Washington, in Book No. 13 of Ground Water Right Certificates, on page 6087-A, on the 2 day of July 19 68

STATE OF WASHINGTON,
County of ..... } ss.

I certify that the within was received and duly recorded by me in Volume ..... of Book of Water Right Certificates, at page ....., on the ..... day of ....., 19 ....

.....

STATE PRINTING PLANT OLYMPIA, WASH.

Town of Poulsbo
PO Box 444

b F. No. 7361—OS—6-67.

CERTIFICATE RECORD No. 13 PAGE No. 6087-A

STATE OF WASHINGTON, COUNTY OF Kitsap

Certificate of Ground Water Right

Issued in accordance with the provisions of Chapter 263, Laws of Washington for 1945, and amendments thereto, and the rules and regulations of the Department of Water Resources thereunder.

933438

THIS IS TO CERTIFY *That* TOWN OF POULSBO

of Poulsbo, Washington, *has made proof to the satisfaction of the Department of Water Resources of Washington, of a right to the use of the ground waters of a* well

located within NW¼NE¼

Sec. 13, *Twp.* 26 *N., R.* 1 E. *W.M.,*

for the purpose of municipal supply

under and subject to provisions contained in Ground Water Permit No. 7804 *issued by the Department of Water Resources and that said right to the use of said ground waters has been perfected in accordance with the laws of Washington, and is hereby confirmed by the Department of Water Resources of Washington and entered of record in Volume* 13 *at page* 6087-A; *that the right hereby confirmed dates from* December 30, 1966; *that the quantity of ground water under the right hereby confirmed for the purposes aforesaid, is limited to an amount actually beneficially used for said purposes, and shall not exceed* 475 gallons per minute; 396 acre-feet per year, to supply the Town of Poulsbo continuously during entire year.

Special provisions required by the Department of Water Resources: Issued as a supplemental supply to Surface Water Certificates No. 2115, No. 5585, and No. 8525. The total annual withdrawal shall be limited to 396 acre-feet less any amount used under the above rights.

A description of the lands to which such ground water right is appurtenant:

Town of Poulsbo

The right to the use of the water aforesaid hereby confirmed is restricted to the lands or place of use herein described, except as provided in Sections 6 and 7, Chapter 122, Laws of 1929.

This certificate of ground water right is specifically subject to relinquishment for nonuse of water as provided in Section 18, Chapter 233, Laws of 1967.

WITNESS the seal and signature of the Assistant Director, Division of Water Management, Department of Water Resources affixed this 2 *day of* July, *19* 68

Glen H. Fuller

Assistant Director
Division of Water Management
Department of Water Resources

Filed for Record July 5 19 68 at 8:32 a M
Request of Dept. of Water Resources

007 ___ 107

Progress Sheet—Ground Water Application

4-1-70 P.M.

NAME Town of Poulsbo
P. O. Box 444
Poulsbo, Washington 98370

Assigned to

G. W. APPLI. NO. 8157 PERMIT NO. 7804 CERT. NO. 6087 A

AMENDED CANCELLED

Application received December 30, 1966 Initial $10.00 fee received January 1, 1967
Statement of additional examination fee $ Sent Received
Application returned for completion or correction Received

TEMPORARY PERMIT: Approved by Issued

PUBLICATION:
O.K.'d by Date 1/6/67 Notice sent 1-6-67
Protests
Filed
Affidavit received and checked 1-22-67 Time expired 2-20-67
Amended notice sent Affidavit received
Time expires

DEPT. OF GAME REPORT

EXAMINATION Made 3-2-67 by
O.K.'d for permit 3-20-67 by
Statement of permit fee sent 3-9-67 Amount $ 20.00 Received 3-20-67

PERMIT NO. 7804 ISSUED 4-4-67

BEGINNING OF CONSTRUCTION: Notice sent 4-4-67 Filed 4-17-68
Extension fee $ Extended to
Extended to

WELL DRILLER'S REPORT: Sent 4-4-67 Filed 6-8-67

COMPLETION OF CONSTRUCTION: Notice sent 4-17-68 Filed 5-7-68
$2.00 extension fee Extended to
To

PROOF OF APPROPRIATION: Sent 5-7-68 Filed
$2.00 extension fee Extended to

Statement of certificate fee sent $ Received

CERTIFICATE OF GROUND WATER RIGHT NO. 6087 A ISSUED 7-2-68

STATE PRINTING PLANT OLYMPIA, WASHINGTON

LINCOLN HILL WELL

STATE OF WASHINGTON
DEPARTMENT OF CONSERVATIO...

WELL SCHEDULE No. 26 / 1E - 13B

Date Nov, 1969

Record by Jim

Source State DWR C6017

Location: State of WASHINGTON

County Kitsap

Area Poulsbo

Map

___ ¼ ___ ¼ sec. ___ T. ___ N., R. ___ E. W.

DIAGRAM OF SECTION

Details S 80° E 950' from N ¼ cor

Owner Poulsbo ([redacted]) (His No. ___)

Address

Driller Stoican Address

Topography

Land-surface datum 320 ft. above below

Type: Dug Drilled Driven Bored Jetted

Depth: Rept. 313 feet

Meas. (was 320) feet

Date MAR - MAY, 1967

Casing: Diam. 8 to ___ in. ft. Type

Depth 298 ft. Finish 15' of screen

Chief aquifer Depth ___ ft. Thick ___ ft.

Water level: Rept. Meas. 115 ft. ___, 19___, above below

which is ___ ft. above below datum

Pump: Type Capacity Size gal. min.

Driven by horsepower

Yield: Flow gal. min. Pump 400 gal. min. Meas. Rept. Est.

Drawdown 36 ft. after 4 hours pumping gal. min.

Adequacy, permanence

Use: Dom. Stock. PS RR. Ind. Irr. Obs.

Quality: Sample No. ___, 19___ Temp. ___ °F.

Taste, color, hardness, sanitation, etc.

Other data: Log Water levels Draft Pump test Analyses

Turn up

SP-15529

WELL SCHEDULE CONTINUED

LOGS, CASINGS, SCREENS, AQUIFERS

(As necessary, insert headings and use space below for full record. Complete logs should be recorded on separate form for that purpose, but fragmentary logs may be entered here.)

	(FEET)	(FEET)
HP		106
C		168
Sl S, C		174
S G muddy w/b		184
C		192
f S, sl w/b		224
clean S, woody, w/b		250
f S w/ C.		256
clean S w G		259
S G w/b		263
med coarse S w/b		270
med S		275
Sl S C		283
S G w/b		287
med coarse S		293
med S		300
med crse S		304

MISCELLANEOUS

(On face of schedule add asterisks to identify topics amplified; use same topic headings here.)

S & G	314
mudstone	320

@ 400
(11 min recovery to SWL)

A 9807 Gallanger
for 400 gpm is 300' N of
Probst well

Nike well / Pos Barn?

STATE OF WASHINGTON
DEPARTMENT OF ECOLOGY

CERTIFICATE OF WATER RIGHT

☐ *Surface Water* (Issued in accordance with the provisions of Chapter 117, Laws of Washington for 1917, and amendments thereto, and the rules and regulations of the Department of Ecology.)

☒ *Ground Water* (Issued in accordance with the provisions of Chapter 263, Laws of Washington for 1945, and amendments thereto, and the rules and regulations of the Department of Ecology.)

CERTIFICATE NUMBER	PERMIT NUMBER	APPLICATION NUMBER	PRIORITY DA
G1-00643C	9185	10020	February 13, 1969

NAME
TOWN OF POULSBO

ADDRESS (STREET)	(CITY)	(STATE)	(ZIP CODE)
P.O. Box 444	Poulsbo	Washington	98370

This is to certify that the herein named applicant has made proof to the satisfaction of the Department of Ecology of a right to the use of the public waters of the State of Washington as herein defined, and under and specifically subject to the provisions contained in the Permit issued by the Department of Ecology, and that said right to the use of said waters has been perfected in accordance with the laws of the State of Washington, and is hereby confirmed by the Department of Ecology and entered of record as shown.

PUBLIC WATER TO BE APPROPRIATED

SOURCE
A well

TRIBUTARY OF (IF SURFACE WATERS)

MAXIMUM CUBIC FEET PER SECOND	MAXIMUM GALLONS PER MINUTE	MAXIMUM ACRE-FEET PER YEAR
	100.0	160.0

QUANTITY, TYPE OF USE, PERIOD OF USE
Municipal Supply - continuously

LOCATION OF DIVERSION/WITHDRAWAL

APPROXIMATE LOCATION OF DIVERSION/WITHDRAWAL
1060 feet East and 450 feet North from Southwest corner of Sec. 10

LOCATED WITHIN (SMALLEST LEGAL SUBDIVISION)	SECTION	TOWNSHIP N.	RANGE, E. OR W. W.M.	W.R.I.A.	COUNTY
S½SW¼SW¼	10	26	1 E.	15	Kitsap

RECORDED PLATTED PROPERTY

LOT	BLOCK	OF (GIVE NAME OF PLAT OR ADDITION)

LEGAL DESCRIPTION OF PROPERTY WATER TO BE USED ON

Area served by the Town of Poulsbo.

PROVISIONS

Issued as a supplemental supply to Surface Water Certificates Numbers 2115, 5585, and 8525 and Ground Water Certificat Number 6087. The total diversion or withdrawal from all sources are not to exceed 516.0 acre-feet per year.

The right to the use of the water aforesaid hereby confirmed is restricted to the lands or place of use herein described, except as provided in RCW 90.03.380, 90.03.390, and 90.44.020.

This certificate of water right is specifically subject to relinquishment for nonuse of water as provided in RCW 90.14.180.

Given under my hand and the seal of this office at Olympia, Washington, this 31st *day of* October, *1975*

JOHN A. BIGGS, *Director*
Department of Ecology

by Robert K. McCormick

ROBERT K. McCORMICK, Regional Manager

ENGINEERING DATA
OK

FOR COUNTY USE ONLY

STATE OF WASHINGTON
DEPARTMENT OF ECOLOGY

CERTIFICATE OF WATER RIGHT

☐ *Surface Water* (Issued in accordance with the provisions of Chapter 117, Laws of Washington for 1917, and amendments thereto, and the rules and regulations of the Department of Ecology.)

☒ *Ground Water* (Issued in accordance with the provisions of Chapter 263, Laws of Washington for 1945, and amendments thereto, and the rules and regulations of the Department of Ecology.)

CERTIFICATE NUMBER	PERMIT NUMBER	APPLICATION NUMBER	PRIORITY DATE
G1-00643C	9185	10020	February 13, 1969

NAME
TOWN OF POULSBO

ADDRESS (STREET)	(CITY)	(STATE)	(ZIP CODE)
P.O. Box 444	Poulsbo	Washington	98370

This is to certify that the herein named applicant has made proof to the satisfaction of the Department of Ecology of a right to the use of the public waters of the State of Washington as herein defined, and under and specifically subject to the provisions contained in the Permit issued by the Department of Ecology, and that said right to the use of said waters has been perfected in accordance with the laws of the State of Washington, and is hereby confirmed by the Department of Ecology and entered of record as shown.

PUBLIC WATER TO BE APPROPRIATED

SOURCE
A well

TRIBUTARY OF (IF SURFACE WATERS)

MAXIMUM CUBIC FEET PER SECOND	MAXIMUM GALLONS PER MINUTE	MAXIMUM ACRE-FEET PER YEAR
	100.0	160.0

QUANTITY, TYPE OF USE, PERIOD OF USE
Municipal Supply - continuously

LOCATION OF DIVERSION/WITHDRAWAL

APPROXIMATE LOCATION OF DIVERSION/WITHDRAWAL
1060 feet East and 450 feet North from Southwest corner of Sec. 10.

LOCATED WITHIN (SMALLEST LEGAL SUBDIVISION)	SECTION	TOWNSHIP N.	RANGE, (E. OR W.) W.M.	W.R.I.A.	COUNTY
S½SW¼SW¼	10	26	1 E.	15	Kitsap

RECORDED PLATTED PROPERTY

LOT	BLOCK	OF (GIVE NAME OF PLAT OR ADDITION)

LEGAL DESCRIPTION OF PROPERTY WATER TO BE USED ON

Area served by the Town of Poulsbo.

11.19.75

REEL 80FR 567

Issued as a supplemental supply to Surface Water Certificates Numbers 2115, 5585, and 8525 and Ground Water Certificat Number 6087. The total diversion or withdrawal from all sources are not to exceed 516.0 acre-feet per year.

The right to the use of the water aforesaid hereby confirmed is restricted to the lands or place of use herein described, except as provided in RCW 90.03.380, 90.03.390, and 90.44.020.

This certificate of water right is specifically subject to relinquishment for nonuse of water as provided in RCW 90.14.180.

Given under my hand and the seal of this office at Olympia, Washington, this 31st *day of* October, *19*75

DEPARTMENT OF ECOLOGY • STATE OF WASHINGTON

ENGINEERING DATA
OK

JOHN A. BIGGS, *Director*
Department of Ecology

by Robert K. McCormick
ROBERT K. McCORMICK, Regional Manager

FOR COUNTY USE ONLY

Filed for Record Nov. 6 1975 at 8 45 a M
Request of State of Wash.
TED WRIGHT, Kitsap County Auditor

REEL 80FR 568

1115254 Certif. of W/R 8c

ECY 070-33(2)

7-1-75 pA

Progress Sheet—Ground Water Application

NAME Town of Poulsbo
P.O. Box 444
Poulsbo, Washington 98370 Assigned to

G. W. APPLI. NO. 10020 PERMIT NO. 9185 CERT. NO. G100643C A

AMENDED CANCELLED

Application received February 13, 1969 Initial $10.00 fee received February 13, 1969
Statement of additional examination fee $ Sent Received
Application returned for completion or correction Received

TEMPORARY PERMIT: Approved by Issued

PUBLICATION:
O.K.'d by Date 2-21-69 Notice sent 2-27-69
Protests
Filed
Affidavit received and checked Time expired 3-10-69
Amended notice sent Affidavit received
Time expires

DEPT. OF GAME REPORT

EXAMINATION Made 4-9-69 by B.S.
O.K.'d for permit 6-13-69 by R.R.L.
Statement of permit fee sent 6-3-69 Amount $ 80.00 Received 6-13-69

PERMIT NO. 9185 ISSUED 6-19-69

NO Bond Small Use

BEGINNING OF CONSTRUCTION: Notice sent Started Filed 2-21-69
Extension fee $ Extended to
Extended to

WELL DRILLER'S REPORT: Sent 6-19-69 Filed

COMPLETION OF CONSTRUCTION: Notice sent 6-19-69 Filed 9-10-70
$2.00 extension fee Extended to
To

PROOF OF APPROPRIATION: Sent 9-10-70 Filed 10/14/75
$2.00 extension fee Extended to

Statement of certificate fee sent $ Received 10/15/75 A.J.

CERTIFICATE OF GROUND WATER RIGHT NO. G100643C A ISSUED 10-31-75
certificate checked 10/23/75 S.P.

STATE OF WASHINGTON
DEPARTMENT OF CONSERVATION

WELL SCHEDULE

No. 26/1E-10N

Date Nov, 1969

Record by JBM

Source State DWR A 10020

DIAGRAM OF SECTION

Location: State of WASHINGTON

County

Area

Map

¼ ¼ sec. T. N., R. E. W.

Details 1060 E & 950 N of SW COR

Owner Poulsbo (was NIKE) (His No.)

Address

Driller (Walster engr) Address

Topography

Land-surface datum 260 ft. above below

Type: Dug Drilled Driven Bored Jetted

Depth: Rept. 108 feet

Meas. feet

Date , 19

Casing: Diam. 12 to in. ft. Type

Depth ft. Finish 102-107 30 SLOT SCREEN

Chief aquifer Depth ft. Thick ft.

Water level: Rept. Meas. +32 ft. , 19 , above below

which is ft. above below datum

Pump: Type Capacity Size gal. min.

Driven by horsepower

Yield: Flow 60 gal. min. Pump gal. min. Meas. Rept. Est.

Drawdown 18 ft. after — hours ~~pumping~~ bailing 100 gal. min.

Adequacy, permanence

Use: Dom. Stock. PS RR. Ind. Irr. Obs.

Quality: Sample No. , 19 Temp. 44 °F.

Taste, color, hardness, sanitation, etc.

Other data: Log Water levels Draft Pump test Analyses

Turn up

SP-15528

DEPARTMENT OF THE ARMY
DIVISION NORTH PACIFIC
INSTALLATION SEATTLE DISTRICT

DRILLING LOG

1. PROJECT PAULSBO, WASH. NIKE F.M. SHOP
SHEET OF
2. LOCATION (Coordinates or Station) SW¼ SW¼, SEC. 10, T26N, R1E, WM
3. DRILLING AGENCY WESTERN DRILLING & EQUIP., TACOMA
4. HOLE NO. (As shown on drawing title and file No.) PAULSBO NIKE F.M. NO. 1
5. NAME OF DRILLER JOHNSON
6. DIRECTION OF HOLE: [X] VERTICAL [ ] INCLINED; DEGREES WITH VERTICAL
7. THICKNESS OF OVER-BURDEN 107.7+
8. DEPTH DRILLED INTO ROCK 0
9. TOTAL DEPTH OF HOLE 107.7
10. SIZE AND TYPE OF BIT 12" CABLE TOOL
11. DATUM FOR ELEVATION SHOWN (TBM or MSL) M.S.L.
12. MANUFACTURER'S DESIGNATION OF DRILL STAR 72
13. TOTAL NO. OF OVERBURDEN SAMPLES TAKEN: DISTURBED; UNDISTURBED
14. TOTAL NO. CORE BOXES
15. ELEV. GROUND WATER FLOWING
16. DATE HOLE: STARTED 6 JUL 59; COMPLETED 20 JUL 59
17. ELEV. TOP OF HOLE 260
18. TOTAL CORE RECOVERY FOR BORING (%)
19. SIGNATURE OF INSPECTOR KENNEDY (CONST.) GALSTER (GEOL)

ELEVATION	DEPTH	LEGEND	CLASSIFICATION OF MATERIALS (Description)	% CORE RECOVERY	BOX OR SAMPLE NO.	REMARKS (Drilling time, water loss, depth of weathering, etc., if significant)
260	0					12" DIA. CASING
		GW	GRAVEL, SAND, SILT, CLAY, AND COBBLES, COMPACT			26/1E-1CN
211	49	SP	SAND W/ GRAVEL			
205	55					
		GW	GRAVEL, SAND, SILT, CLAY, COBBLES AND BOULDERS, COMPACT			BTM. OF 12" CASING @ 103'
158	102	SW	SAND AND GRAVEL, (FINE)			
152.3	107.7		BOTTOM OF WELL			#30 JOHNSON SCREEN (12" DIA.) INSTALLED 102 - 107'
						WATER ENCOUNTERED AT 102'. WATER LEVEL ROSE TO SURFACE AND FLOWED AT 60 GPM.
			PUMPING TEST @ 100 GPM DD 15' RECOV. 2½ MIN. NO SAND IN WELL FLOWING 75 GPM			BAIL TEST @ 100 GPM DD 18' RECOV 3½ MIN. WELL THEN FLOWING AT 35 GPM. 3' OF SAND IN WELL
			SHUT IN PRESSURE =14 PSI /4psi = 32 ft WATER TEMPERATURE 44° F			
			Elev SWL ≅ 290'			
			75/32 = 2.3 gpm/ft (flowing)			
			100/47 = 2 gpm/ft (Pumping)			

Big Valley #1

STATE OF WASHINGTON
DEPARTMENT OF ECOLOGY

CERTIFICATE OF WATER RIGHT

☐ Surface Water (Issued in accordance with the provisions of Chapter 117, Laws of Washington for 1917, and amendments thereto, and the rules and regulations of the Department of Ecology.)

☒ Ground Water (Issued in accordance with the provisions of Chapter 263, Laws of Washington for 1945, and amendments thereto, and the rules and regulations of the Department of Ecology.)

PRIORITY DATE	APPLICATION NUMBER	PERMIT NUMBER	CERTIFICATE NUMBER
October 14, 1980	G1-23707	G1-23707P	G1-23707C

NAME
CITY OF POULSBO

ADDRESS (STREET)	(CITY)	(STATE)	(ZIP CODE)
P. O. Box 98	Poulsbo	Washington	98370

This is to certify that the herein named applicant has made proof to the satisfaction of the Department of Ecology of a right to the use of the public waters of the State of Washington as herein defined, and under and specifically subject to the provisions contained in the Permit issued by the Department of Ecology, and that said right to the use of said waters has been perfected in accordance with the laws of the State of Washington, and is hereby confirmed by the Department of Ecology and entered of record as shown.

PUBLIC WATER TO BE APPROPRIATED

SOURCE
Well

TRIBUTARY OF (IF SURFACE WATERS)

MAXIMUM CUBIC FEET PER SECOND	MAXIMUM GALLONS PER MINUTE	MAXIMUM ACRE-FEET PER YEAR
	215	344.0 - Supplemental to existing rights held by City of Poulsbo

QUANTITY, TYPE OF USE, PERIOD OF USE
Municipal Supply - continuously

LOCATION OF DIVERSION/WITHDRAWAL

APPROXIMATE LOCATION OF DIVERSION—WITHDRAWAL
1600 feet east and 1500 feet north of SW corner of Sec. 2.

LOCATED WITHIN (SMALLEST LEGAL SUBDIVISION)	SECTION	TOWNSHIP N.	RANGE, (E. OR W.) W.M.	W.R.I.A.	COUNTY
NE¼SW¼	2	26	1 E	15	Kitsap

RECORDED PLATTED PROPERTY

LOT	BLOCK	OF (GIVE NAME OF PLAT OR ADDITION)

LEGAL DESCRIPTION OF PROPERTY ON WHICH WATER IS TO BE USED

Area served by the City of Poulsbo.

PROVISIONS

An approved measuring device shall be installed and maintained in accordance with RCW 90.03.360, WAC 508-64-020 through WAC 508-64-040.

The right to the use of the water aforesaid hereby confirmed is restricted to the lands or place of use herein described, except as provided in RCW 90.03.380, 90.03.390, and 90 44.020.

This certificate of water right is specifically subject to relinquishment for nonuse of water as provided in RCW 90.14.180.

Given under my hand and the seal of this office at Redmond *Washington, this* 15th *day of* June, *19* 82

Department of Ecology

ENGINEERING DATA

OK

by Robert K. McCormick

ROBERT K. McCORMICK, Regional Manager

FOR COUNTY USE ONLY

STATE OF WASHINGTON
DEPARTMENT OF ECOLOGY

COMPUTER INPUT
- [ ] APPLICATION
- [ ] PERMIT
- [ ] CERTIFICATE
- [ ] OTHER

PROGRESS SHEET

- [ ] SURFACE WATER
- [X] GROUND WATER

NAME: City of Poulsbo			TELEPHONE NO. 779-3901
ADDRESS: P.O. Box 98	CITY: Poulsbo,	STATE: Washington	ZIP CODE: 98370
ATTENTION TO		TELEPHONE NO.	DATE ASSIGNED
ADDRESS	CITY	STATE	ZIP CODE
APPLICATION NO. G1-23707	PERMIT NO. G1-23707P	CERTIFICATION NO. G1-23707C	
DATE APPLIED	DATE CANCELLED	W.R.I.A.	

APPLICATION

DATE APPLICATION RECEIVED: October 14, 1980	INITIAL $10.00 FEE RECEIVED: [X] YES [ ] NO	DATE FEE RECEIVED: October 14, 1980
STATEMENT OF ADDITIONAL EXAMINATION FEES	DATE SENT	DATE RECEIVED
DATE RETURNED FOR COMPLETION OR CORRECTION	DATE RECEIVED	

TEMPORARY PERMIT

APPROVED BY: DPG 12-3-80	DATE ISSUED: 12-3-80

PUBLICATION

APPROVED BY	DATE APPROVED	DATE NOTICE SENT: 12-10-80
PROTESTED BY AND DATE		

DATE AFFIDAVIT RECEIVED: 4-2-81	CHECKED BY: DX	TIME EXPIRED: 4-18	DATE AMENDED NOTICE SENT	DATE AFFIDAVIT RECEIVED	TIME EXPIRED

DEPARTMENT OF GAME AND FISHERIES REPORT

APPROVED	PROVISO	PROTEST

EXAMINATION

DATE EXAMINATION MADE: 8-26-81	MADE BY: DPG	DATE REPORT OF EXAM. WRITTEN: 9-22-81	WRITTEN BY: DPG	CORRECTED BY:
DATE PERMIT FEE REQUESTED	AMOUNT DUE: 20		DATE RECEIVED: 1-25-82	OK

PERMIT

PERMIT APPROVED BY: AA	DATE APPROVED: 2-10-82	PERMIT NO. G1-23707P	DATE ISSUED: 2-16-82

BEGINNING OF CONSTRUCTION

DATE NOTICE SENT	DATE FILED	EXTENSION FEE
EXTENDED TO	EXTENDED TO	

WELL DRILLER'S AND/OR CONSTRUCTION REPORT

DATE SENT	DATE FILED: 3-17-82

COMPLETION OF CONSTRUCTION

DATE NOTICE SENT: 2-16-82	DATE FILED: 3-17-82	EXTENSION FEE
EXTENDED TO	EXTENDED TO	

PROOF OF APPROPRIATION

DATE SENT	DATE FILED: 5-10-82	EXTENSION FEE	EXTENDED TO	
DATE APPROPRIATION FEE REQUESTED	AMOUNT DUE	DATE RECEIVED: 5-10-82	DATE APPROVED FOR CERTIFICATE: 5-17-82	APPROVED BY:

CERTIFICATION

PROOF EXAM. REQUIRED: [ ] YES [ ] NO	CERTIFICATE NUMBER: G1-23707C	DATE ISSUED: 6-15-82

REMARKS

D144 Big Valley Well 1

26/1E - 2L4 47°46'12"N 122°38'28"W

Geologic Log 80' = land surface

top	bottom	material
(log is same as 2L5 from 0' to 225')		
225	264	clay, grey, sticky; some granules
264	280	sand & gravel, grey
280	283	sand & gravel (poorly sorted); layers of clay, grey
283	289	sand & gravel, grey
289	292	sand & gravel; layers of clay, grey
292	320	sand & gravel (poorly sorted), grey
320	322	fine sand; some gravel, brown
322	325	fine sand, brown
325	327	interbedded silt, clay, and fine sand
327	329	sand & gravel
329	345	silty clay, brown; some sand

This hole is 40' north of 2L5. It was abandoned when a weld parted. We were intending to place 20' of screen from 295' to 315'.

Pugh

DEPARTMENT OF ECOLO

PERMIT

TO APPROPRIATE PUBLIC WATERS OF THE STATE OF WASHINGTON

☐ Surface Water (Issued in accordance with the provisions of Chapter 117, Laws of Washington for 1917, and amendments thereto, and the rules and regulations of the Department of Ecology.)

☒ Ground Water (Issued in accordance with the provisions of Chapter 263, Laws of Washington for 1945, and amendments thereto, and the rules and regulations of the Department of Ecology.)

PRIORITY DATE	APPLICATION NUMBER	PERMIT NUMBER	CERTIFICATE NUMBER
January 10, 1989	G1-25375	G1-25375 P	

NAME
City of Poulsbo

ADDRESS (STREET)	(CITY)	(STATE)	(ZIP CODE)
19050 Jensen Way NE	Poulsbo	Washington	98370

The applicant is, pursuant to the Report of Examination which has been accepted by the applicant, hereby granted a permit to appropriate the following described public waters of the State of Washington, subject to existing rights and to the limitations and provisions set out herein.

PUBLIC WATERS TO BE APPROPRIATED

SOURCE
Well

TRIBUTARY OF (IF SURFACE WATERS)

MAXIMUM CUBIC FEET PER SECOND	MAXIMUM GALLONS PER MINUTE	MAXIMUM ACRE-FEET PER YEAR
	650	735*

QUANTITY, TYPE OF USE, PERIOD OF USE

Municipal supply - continuously
*Total withdrawal from all sources will not exceed 1893 acre-feet per year

LOCATION OF DIVERSION/WITHDRAWAL

APPROXIMATE LOCATION OF DIVERSION–WITHDRAWAL

790 feet north and 640 feet west of the center of Section 13

LOCATED WITHIN (SMALLEST LEGAL SUBDIVISION)	SECTION	TOWNSHIP N.	RANGE, (E. OR W.) W.M.	W.R.I.A.	COUNTY
SE¼ NW¼	13	26	1E	15	Kitsap

RECORDED PLATTED PROPERTY

LOT	BLOCK	OF (GIVE NAME OF PLAT OR ADDITION)

LEGAL DESCRIPTION OF PROPERTY ON WHICH WATER IS TO BE USED

Area served by the Poulsbo Water System within Sections 1, 2, 3, 9, 10, 11, 12, 13, 14, 15, 16, 21, 22, 23, 24, and 25, Township 26 north, Range 1 east Willamette Meridian, within Kitsap County, Washington, and as defined in the City of Poulsbo Water System Plan, October 1992.

ESCRIPTION OF PROPOSED WORKS

Well 10" X 310'

DEVELOPMENT SCHEDULE

BEGIN PROJECT BY THIS DATE:	COMPLETE PROJECT BY THIS DATE:	WATER PUT TO FULL USE BY THIS DATE:
Started	April 30, 1995	September 30, 1995

PROVISIONS

This permit is subject to the implementation of the minimum requirements established in the Interim Guidelines for Public Water Systems Regarding Water Use Reporting, Demand Forecasting Methodology and Conservation Programs, July 1990.

In order to adequately monitor the aquifer, the City of Poulsbo shall install a monitoring well within the same aquifer as the Pugh Rd. well. The monitoring well should be located ¼ mile to the northwest of the Pugh Rd. well between the well and East Fork Dogfish Creek. The monitoring well will be a dedicated monitoring well with no pump installed. A Steven's type continuous water level measuring device shall be installed on the monitoring well. Whenever the paper is changed, the hydrographs will be sent to Kitsap PUD for their computer database.

A certificate of water right will not be issued until a final investigation is made. A minimum of one year of data from the monitoring well will be reviewed before a certificate of water right will be issued.

This permit shall be subject to cancellation should the permittee fail to comply with the above development schedule and/or fail to give notice to the Department of Ecology on forms provided by that Department documenting such compliance.

Given under my hand and the seal of this office at Bellevue, Washington,

this 30th day of April, 1993.

Department of Ecology

ENGINEERING DATA
OK_____

by Stephen J. Hirschey
Stephen J. Hirschey, Section Supervisor, Water Resources

PERMITEXAMINATION

No. G1-25375 P

CITY OF BOISE
WELL 505 ON PUGH ROAD

FROM BURT'S DAILY SHEETS

S.U. = 2.5'

ELEV = 403'

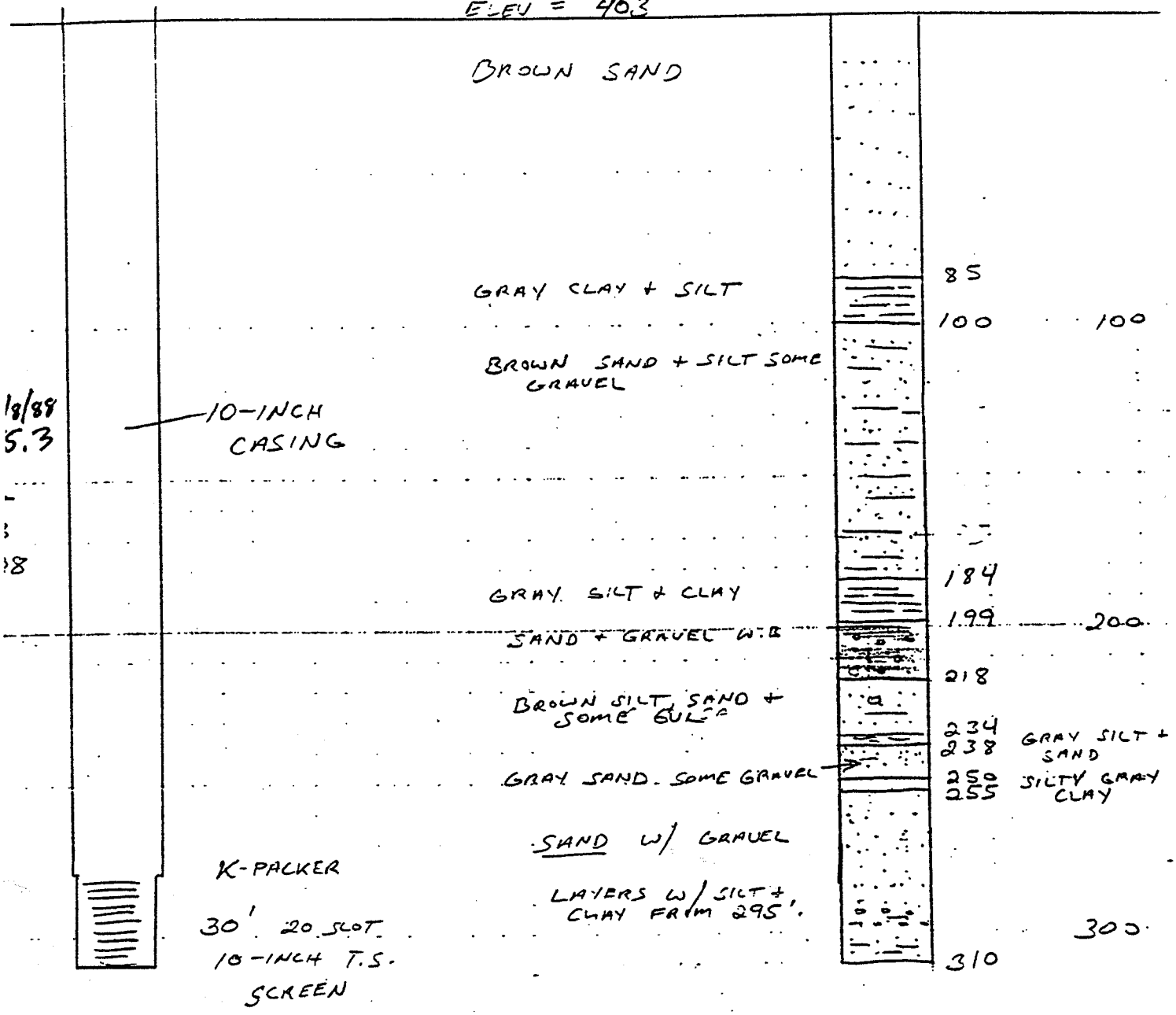

PETE SAYS TILL @ 310

T.D. = 310 ON 10/24/88

Big Valley #8

DEPARTMENT OF ECOLOGY

PERMIT

TO APPROPRIATE PUBLIC WATERS OF THE STATE OF WASHINGTON

☐ Surface Water (Issued in accordance with the provisions of Chapter 117, Laws of Washington for 1917, and amendments thereto, and the rules and regulations of the Department of Ecology.)

☒ Ground Water (Issued in accordance with the provisions of Chapter 263, Laws of Washington for 1945, and amendments thereto, and the rules and regulations of the Department of Ecology.)

PRIORITY DATE	APPLICATION NUMBER	PERMIT NUMBER	CERTIFICATE NUMBER
June 16, 1993	G1-27192	G1-27192 P	

NAME
City of Poulsbo

ADDRESS (STREET)	(CITY)	(STATE)	(ZIP CODE)
P.O. Box 98	Poulsbo	Washington	98370

The applicant is, pursuant to the Report of Examination which has been accepted by the applicant, hereby granted a permit to appropriate the following described public waters of the State of Washington, subject to existing rights and to the limitations and provisions set out herein.

PUBLIC WATERS TO BE APPROPRIATED

SOURCE
Well

TRIBUTARY OF (IF SURFACE WATERS)

MAXIMUM CUBIC FEET PER SECOND	MAXIMUM GALLONS PER MINUTE	MAXIMUM ACRE-FEET PER YEAR
	600	672*

QUANTITY, TYPE OF USE, PERIOD OF USE
Municipal supply continuously
*Annual quantity is supplemental to existing rights held by City of Poulsbo

LOCATION OF DIVERSION/WITHDRAWAL

APPROXIMATE LOCATION OF DIVERSION–WITHDRAWAL

LOCATED WITHIN (SMALLEST LEGAL SUBDIVISION)	SECTION	TOWNSHIP N.	RANGE, (E. OR W.) W.M.	W.R.I.A.	COUNTY
NE¼ SW¼	2	26	01	15	Kitsap

RECORDED PLATTED PROPERTY

LOT	BLOCK	OF (GIVE NAME OF PLAT OR ADDITION)

LEGAL DESCRIPTION OF PROPERTY ON WHICH WATER IS TO BE USED

Area served by the City of Poulsbo in accordance with their most recent approved water system plan and/or periodic updates as may be approved.

DESCRIPTION OF PROPOSED WORKS

Well drilled, 12" dia casing, 538' deep screened 453.9 to 515.3 feet below surface

DEVELOPMENT SCHEDULE

BEGIN PROJECT BY THIS DATE:	COMPLETE PROJECT BY THIS DATE:	WATER PUT TO FULL USE BY THIS DATE:
Started	July 15, 1997	July 15, 2001

PROVISIONS

This permit is subject to the implementation of the minimum requirements established in the Conservation Planning Requirements: Guidelines for Public Water Systems Regarding Water Use Reporting, Demand Forecasting Methodology and Conservation Programs, March 1994.

In order to monitor the resource, static water level (SWL) shall be measured at least once each month. Measurements shall be taken after the pump has been shut off and the water level in the well has been stabilized. The data shall be maintained and made available to Ecology upon request. However, Ecology's Water Resources Section (NWRO) shall be notified if the SWL is determined to be below the level normally recorded at that time of year.

An approved measuring device shall be installed and maintained in accordance with RCW 90.03.360, WAC 508-64-020 through 508-64-040 (Installation, operation and maintenance requirements). Meter readings shall be recorded monthly and this data shall be maintained and be made available to the Department of Ecology upon request.

A certificate of water right will not be issued until a final investigation is made. A miniumu of one year of data from the monitoring well will be reviewed before a certificate of water right will be issued.

This permit shall be subject to cancellation should the permittee fail to comply with the above development schedule and/or fail to give notice to the Department of Ecology on forms provided by that Department documenting such compliance.

STATE OF WASHINGTON
DEPARTMENT OF ECOLOGY

COMPUTER INPUT
- [ ] APPLICATION
- [ ] PERMIT
- [ ] CERTIFICATE
- [ ] OTHER

PROGRESS SHEET

- [ ] SURFACE WATER
- [X] GROUND WATER

NAME: CITY OF POULSBO MAYOR MITCHUSSON			TELEPHONE NO.: 8-206-779-3901
ADDRESS: PO BOX 98	(CITY): POULSBO	(STATE): WA	(ZIP CODE): 98370
ASSIGNED TO		TELEPHONE NO.	DATE ASSIGNED
ADDRESS	(CITY)	(STATE)	(ZIP CODE)
APPLICATION NO.: G1-27192	PERMIT NO.: G1-27192P		CERTIFICATION NO.
DATE AMENDED	DATE CANCELLED		W.R.I.A.

APPLICATION

DATE APPLICATION RECEIVED: 5-13-93	INITIAL $10.00 FEE RECEIVED: [X] YES [ ] NO	DATE FEE RECEIVED: 6-16-93
STATEMENT OF ADDITIONAL EXAMINATION FEE $	DATE SENT	DATE RECEIVED
DATE RETURNED FOR COMPLETION OR CORRECTION	DATE RECEIVED	

TEMPORARY PERMIT

APPROVED BY	DATE ISSUED

PUBLICATION

APPROVED BY	DATE APPROVED	DATE NOTICE SENT: 9/15/93
PROTESTED BY AND DATE		

DATE AFFIDAVIT RECEIVED: 9.30.93	CHECKED BY: SB	TIME EXPIRED: 10.21.93	DATE AMENDED NOTICE SENT	DATE AFFIDAVIT RECEIVED	TIME EXPIRED

DEPARTMENT OF GAME AND FISHERIES REPORT

APPROVED	PROVISO	PROTEST

EXAMINATION

DATE EXAMINATION MADE	MADE BY	DATE REPORT OF EXAM. WRITTEN	WRITTEN BY	CHECKED BY
DATE PERMIT FEE REQUESTED	AMOUNT DUE		DATE RECEIVED	

PERMIT

PERMIT APPROVED BY	DATE APPROVED	PERMIT NO.: G1-27192	DATE ISSUED: 7/15/96

BEGINNING OF CONSTRUCTION

DATE NOTICE SENT	DATE FILED	EXTENSION FEE
EXTENDED TO	EXTENDED TO	

WELL DRILLER'S AND/OR CONSTRUCTION REPORT

DATE SENT	DATE FILED

COMPLETION OF CONSTRUCTION

CITY OF POULSBO
BIG VALLEY WELL 2

CONSTRUCTION DETAILS

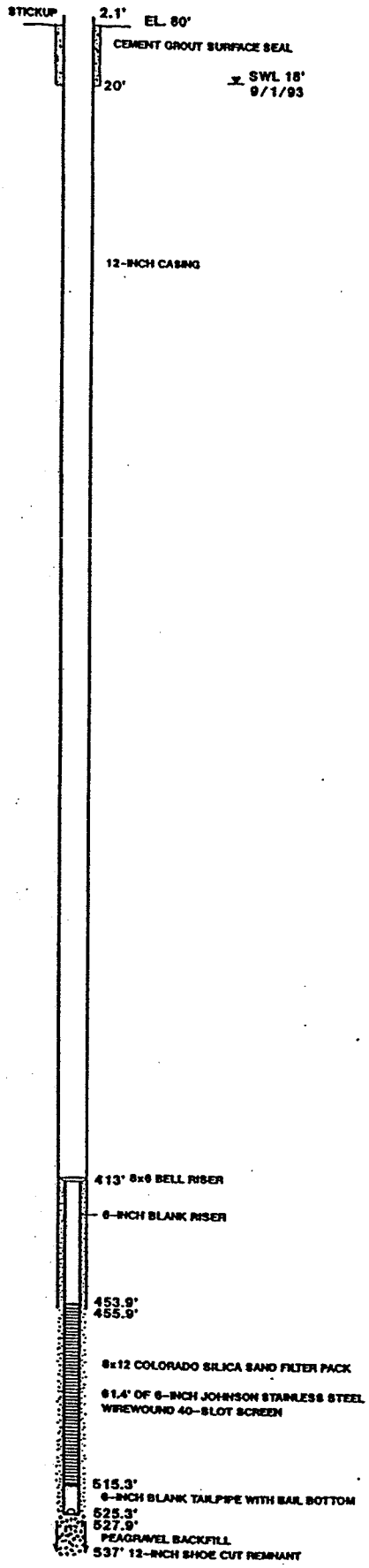

GEOLOGIC LOG

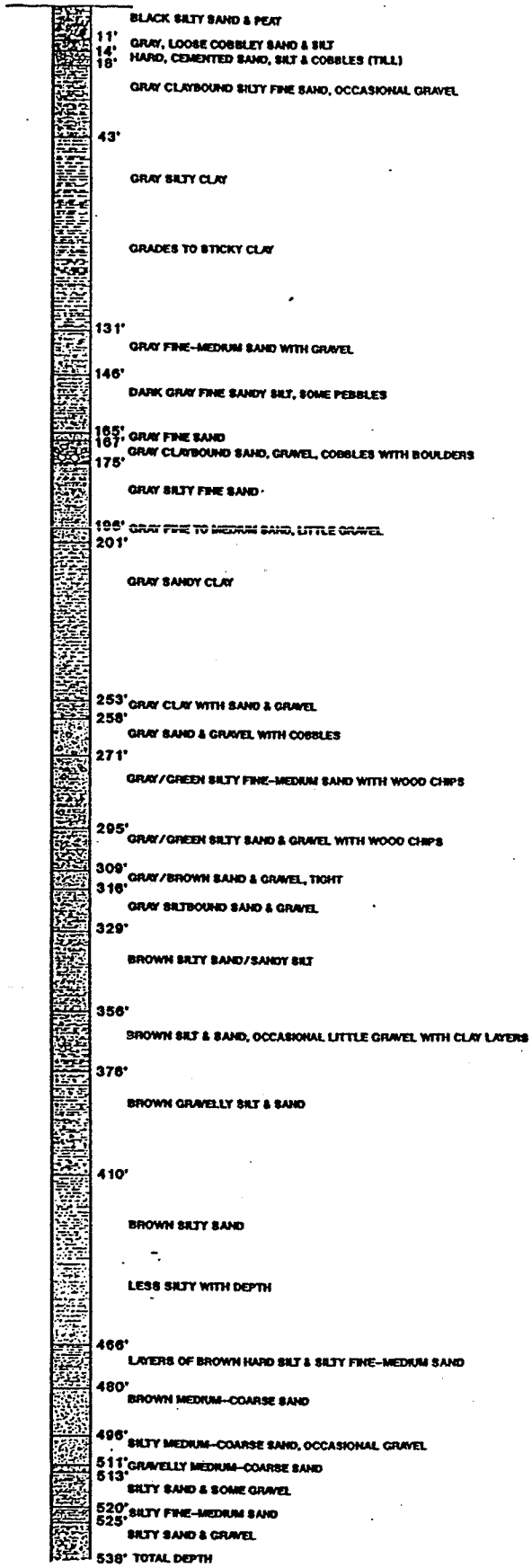

ROBINSON & NOBLE, INC.

e Original and First Copy with
partment of Ecology

econd Copy- Owner's Copy
hird Copy- Driller's Copy

WATER WELL REPORT
STATE OF WASHINGTON

Start Card No. _____
Unique Well ID # ~~[illegible]~~ AAC-682
Water Right Permit No. G1-25894

(1) OWNER: Name CITY OF POULSBO Address PO BOX 98, Poulsbo WA 98370

(2) LOCATION OF WELL: County Kitsap — NE ¼ SW ¼ Sec 2 T 26 N., R 1 E W.M.
(2a) STREET ADDRESS OF WELL (or nearest address) 1300' N & 1600' E of the SW corner of section 2

(3) PROPOSED USE: ☐ Domestic ☐ Industrial ☒ Municipal ☐ Irrigation ☐ Test Well ☐ Other ☐ DeWater

(4) TYPE OF WORK: Owners number of well (if more than one) Big Valley #2
☐ Abandoned ☒ New well Method: ☐ Dug ☐ Bored
☐ Deepened ☒ Cable ☐ Driven
☐ Reconditioned ☐ Rotary ☐ Jetted

(5) DIMENSIONS: Diameter of well 12 inches
Drilled 538 feet. Depth of completed well 525.3 ft.

(6) CONSTRUCTION DETAILS:
Casing installed: 12 " Diam. from +2.0 ft. to 455.9 ft.
☒ Welded 12 " Diam. from 527.9 ft. to 537 ft.
☐ Liner installed " Diam. from ft. to ft.
☐ Threaded

Perforations: ☐ Yes ☒ No
Type of perforator used
Size of perforations in. by in.
perforations from ft. to ft.
perforations from ft. to ft.
perforations from ft. to ft.

Screens: ☒ Yes ☐ No
Manufacturer's Name Johnson
Type stainless, wire Model No.
Diam. 6" PS Slot size 40 from 453.9 ft. to 515.3 ft.
Diam. Slot size from ft. to ft.
Diam. Slot size from ft. to ft.

Gravel packed: ☒ Yes ☐ No Size of gravel 8 x 12 CSSI
Gravel placed from 413 ft. to 525 ft.

Surface Seal: ☒ Yes ☐ No To what depth? 20 ft.
Material used in seal Cement grout
Did any strata contain unusable water? ☒ Yes ☐ No
Type of water? Depth of strata 11
Method of sealing strata off Cement

(7) PUMP: Manufacturer's Name N/A
Type: H.P.

(8) WATER LEVELS: Land-surface elevation above mean sea level 80 altimeter ft.
Static level 20.1 ft. below top of well Date 9/1/93
Artesian pressure lbs. per square inch Date
Artesian water is controlled by (cap, valve, etc)

(9) WELL TESTS: Drawdown is amount water is lowered below static level
Was a pump test made? ☒ Yes ☐ No If yes, by whom? Armstr/R&N
Yield: 600 gal./min. with 112.0 ft. drawdown after 24 hrs.

Recovery data (time taken as zero when pump turned off) (water level measured from well top to water level)

Time	Water Level	Time	Water Level	Time	Water Level
5min	31.2	100	25.9		
10	29.4	240	24.5		
60	26.7				

Date of Test 9/1-2/93

Bailer test gal./min. with ft. drawdown after hrs.
Airtest gal./min. with stem at ft. for hrs.
Artesian flow g.p.m. Date
Temperature of water 51 Was a chemical analysis made? ☒ Yes ☐ No

(10) WELL LOG or ABANDONMENT PROCEDURE DESCRIPTION

Formation: Describe by color, character, size of material and structure, and show thickness of aquifers and the kind and nature of the material in each stratum penetrated, with at least one entry for each change of information.

MATERIAL	FROM	TO
Black silty sand and wood	0	11
Gray loose cobbley sand and silt, w.b.	11	14
Hard cemented sand, silt, and cobbles (till)	14	18
Gray claybound silty fine sand, occasional gravel	18	43
Gray silty clay	43	131
Gray fine to medium silty sand with gravel layers, w.b.	131	146
Dark gray filne sandy silt, some gravel	146	167
Gray claybound sand, gravel, cobbles with boulders	167	175
Gray silty fine sand	175	196
Gray fine to medium sand, little gravel, w.b.	196	201
Gray sandy clay	201	253
Gray clay with sand and gravel	253	258
Gray sand and gravel with cobbles	258	271
Gray/green silty fine to medium sand with wood chips	271	295
Gray/green silty sand and gravel, with wood chips, w.b.	295	309
Gray/brown sand and gravel	309	316
Gray siltbound sand and gravel	316	329
Brown silty sand/sandy silt	329	356
Brown silt and sand, occ. small gravel with clay layers	356	376
Brown gravelly silt and sand	376	410
Brown silty sand	410	466
Layers of brown hard silt and v. silty fine-medium sand	466	480
Brown medium-coarse sand, silty below 496'	480	511
Brown silty sand and some gravel	511	520
Brown silty fine-medium sand	520	525
Brown silty sand and gravel	525	535
Brown silty sand	535	538

Prepared by Joel W. Purdy
Original signed by driller

Work started June 30, 1993. Completed Sept. 2, 1993

WELL CONSTRUCTOR CERTIFICATION:

I constructed and/or accept responsibility for construction of this well, and its compliance with all Washington well construction standards. Materials used and the information reported above are true to my best knowledge and belief.

NAME ARMSTRONG DRILLING, INC. (PERSON, FIRM, OR CORPORATION) (TYPE OR PRINT)

Address 10715 66th AVE E., Puyallup 98373

(Signed) (WELL DRILLER) License No.

Contractor's Registration No. Date , 19

WASHINGTON STATE DEPARTMENT OF ECOLOGY

STATE OF WASHINGTON

PROTESTED REPORT OF EXAMINATION FOR WATER RIGHT CHANGE

Water Right Control Number CG1-25375

Purpose [ ] Place of Use [ ] Point of Diversion/Withdrawal [X] Season [ ]

PRIORITY DATE	CLAIM NO.	PERMIT NO.	CERTIFICATE NO.
January 10, 1989		G1-25375P	

NAME
Poulsbo City of

ADDRESS/STREET	CITY/STATE	ZIP CODE
780 NE Iverson Street PO Box 2275	Poulsbo, WA	98370

PUBLIC WATERS TO BE APPROPRIATED

SOURCE
Well

TRIBUTARY OF (IF SURFACE WATERS)

MAXIMUM CUBIC FEET PER SECOND	MAXIMUM GALLONS PER MINUTE	MAXIMUM ACRE FEET PER YEAR
	650	735*

QUANTITY, PURPOSE OF USE, PERIOD OF USE
735 acre-feet, Municipal Supply, Year-round, as needed

* Total withdrawal from all sources will not exceed 1,893 acre-feet per year.

LOCATION OF DIVERSION/WITHDRAWAL

APPROXIMATE LOCATION OF DIVERSION--WITHDRAWAL
Pugh Road Well - located approximately 1750 feet east and 1870 feet south of the NW corner of section 13.
Lincoln Well 2 - located approximately 2180 feet west of the NE corner of section 13.

LOCATED WITHIN (SMALLEST LEGAL SUBDIVISION)	SECTION	TOWNSHIP	RANGE [E. or W.] W.M.	WRIA	COUNTY
Pugh Road Well – SE/NW	13	26	01 E	15	Kitsap
Lincoln Well 2 - NW/NE	13	26	01 E	15	Kitsap

SOURCE DETAILS	PARCEL	LATITUDE	LONGITUDE	DATUM
Pugh Road Well	132601-2-025-2007	N 47.747 deg	W 122.620 deg	WGS84
Lincoln Well 2	132601-1-014-2	N 47.752 deg	W 122.614 deg	WGS84

LEGAL DESCRIPTION OF PROPERTY ON WHICH WATER IS TO BE USED

[Attachment 1 shows location of the authorized place of use and point(s) of diversion or withdrawal]

The place of use (POU) of this water right is the service area described in the most recent Water System Plan/Small Water System Management Program approved by the Washington State Department of Health, so long as **Poulsbo City** is and remains in compliance with the criteria in RCW 90.03.386(2). RCW 90.03.386 may have the effect of revising the place of use of this water right.

DESCRIPTION OF PROPOSED WORKS

The Lincoln Well 2 is drilled to depth of 265 feet and completed at a depth of 257 feet. Surface elevation is recorded as 325 feet above mean sea level. Casing is described as 16-inch diameter to a depth of 185 feet from +1 feet to 185 feet depth, and 10-inch diameter from +2.5 feet to 185 feet depth. Screens are described as 10-inch diameter 0.040 slot size from 185 feet to 210 feet depth and from 226 feet to 251 feet depth.

The Lincoln Well 2 is situated within the East High Pressure Zone (514 feet), one of four zones used to serve water to the City of Poulsbo service area. Storage for the East High Pressure Zone is via the 1 Million Gallon Pugh Road Reservoir. Pressure reduction valves allow distribution to lower pressure zones to the west.

DEVELOPMENT SCHEDULE

BEGIN PROJECT BY THIS DATE:	COMPLETE PROJECT BY THIS DATE	WATER PUT TO FULL USE BY THIS DATE
Completed	Completed	December 30, 2015

SPECIAL PROVISIONS (as recorded in original Permit)

1. Monitoring Well

1.1. In order to adequately monitor the Poulsbo Aquifer (as described in the Report of Examination), the Applicant shall install a monitoring well within the same aquifer as the two wells authorized under this order. The monitoring well should be located 1/4 mile to the northwest of the Pugh Rd. Well between the well and the East Fork of Dogfish Creek. The monitoring well shall be a dedicated monitoring well with no operational pump installed.

1.2. A continuous water level measuring device shall be installed and maintained at the monitoring well. Data collected shall be maintained and made available to Ecology upon request. A copy of the data shall be sent to Kitsap PUD on an annual basis for inclusion in their water level digital database.

1.3. The Applicant must complete construction of the monitoring well as described in 1.1 prior to connecting Lincoln Well 2 to the City of Poulsbo Water distribution system.

STANDARD PROVISIONS

1. Wells, Well logs and Well Construction Standards

1.1. All wells constructed in the state shall meet the construction requirements of WAC 173-160 titled "Minimum Standards for the Construction and Maintenance of Wells" and RCW 18.104 titled "Water Well Construction". Any well which is unusable, abandoned, or whose use has been permanently discontinued, or which is in such disrepair that its continued use is impractical or is an environmental, safety or public health hazard shall be decommissioned.

1.2. All wells shall be tagged with a Department of Ecology unique well identification number. If you have an existing well and it does not have a tag, please contact the well-drilling coordinator at the regional Department of Ecology office issuing this decision. This tag shall remain attached to the well. If you are required to submit water measuring reports, reference this tag number.

1.3. Installation and maintenance of an access port as described in WAC 173-160- 291(3) is required.

1.4. In addition to the required access port, the applicant shall install and maintain, in operating condition, an airline and pressure gage. The pressure gage shall be equipped with a standard tire valve and placed in a location accessible to Department of Ecology personnel. The airline shall extend from land surface to the top of the pump bowls and the total airline length shall be reported to the Department of Ecology upon completion of the pump system.

2. Measurements, Monitoring, Metering and Reporting

2.1. An approved measuring device shall be installed and maintained for each of the sources identified by this water right in accordance with the rule "Requirements for Measuring and Reporting Water Use", WAC 173-173.

2.2. Water use data shall be recorded weekly. The maximum monthly rate of diversion/withdrawal and the monthly total volume shall be submitted to the Department of Ecology by January 31st of each calendar year. The Department of Ecology is requiring submittal of monthly meter readings to collect seasonal information for water resource planning, management and compliance.

2.3. Department of Ecology personnel, upon presentation of proper credentials, shall have access at reasonable times, to the records of water use that are kept to meet the above conditions, and to inspect at reasonable times any measuring device used to meet the above conditions.

2.4. Reported water use data shall be submitted via the Internet or by using the enclosed forms. To set up an Internet reporting account, access https://fortress.wa.gov/ecy/wrx/wrx/Meteringx/. If you have questions or need additional forms, contact the Northwest Region Office.

2.5. WAC 173-173 describes the requirements for data accuracy, device installation and operation, and information reporting. It also allows a water user to petition the Department of Ecology for modifications to some of the requirements. Installation, operation and maintenance requirements are enclosed as a document entitled "Water Measurement Device Installation and Operation Requirements". http://www.ecy.wa.gov/programs/wr/measuring/measuringhome.html

3. **Department of Health Requirements**
Prior to any new construction or alterations of a public water supply system, the State Board of Health rules require public water supply owners to obtain written approval from the Office of Drinking Water of the Washington State Department of Health. Please contact the Office of Drinking Water at Northwest Drinking Water Operations, 20435 72nd Avenue S, Suite 200, K17-12, Kent, WA 98032-2358, (253) 396-6750, prior to beginning (or modifying) your project.

4. **Municipal Place of Use**
If the criteria in RCW 90.03.386(2) are not met and a Water System Plan/Small Water System Management Program was approved after September 9, 2003, the place of use of this water right reverts to the service area described in that document. If the criteria in RCW 90.03.386(2) are not met and no Water System Plan/Small Water System Management Program has been approved after September 9, 2003, the place of use reverts to the last place of use described by The Department of Ecology in a water right authorization

5. **Schedule and Inspections**
Department of Ecology personnel, upon presentation of proper credentials, shall have access at reasonable times, to the project location, and to inspect at reasonable times, records of water use, wells, diversions, measuring devices and associated distribution systems for compliance with water law.

6. **Water Use Efficiency**
Use of water under this authorization shall be contingent upon the water right holder's maintenance of efficient water delivery systems and use of up-to-date water conservation practices consistent with established regulation requirements and facility capabilities.

7. **Proof of Appropriation**
The water right holder shall file the notice of Proof of Appropriation of water (under which the certificate of water right is issued) when the permanent distribution system has been constructed and the quantity of water required by the project has been put to full beneficial use. The certificate will reflect the extent of the project perfected within the limitations of the superseding permit. Elements of a proof inspection may include, as appropriate, the source(s), system instantaneous capacity, beneficial use(s), annual quantity, place of use, and satisfaction of provisions.

FINDINGS OF FACT AND ORDER

Upon reviewing the investigator's report, I find all facts, relevant and material to the subject application, have been thoroughly investigated. Furthermore, I find the change of water right as recommended will not be detrimental to existing rights or the public welfare.

Therefore, I ORDER the requested change under Groundwater Change Application No. CG1-25375, namely that an additional point of withdrawal be added, be approved, subject to existing rights and the provisions specified above.

You have a right to appeal this decision. To appeal this you must:

- File your appeal with the Pollution Control Hearings Board within 30 days of the "date of receipt" of this document. Filing means actual receipt by the Board during regular office hours.
- Serve your appeal on the Department of Ecology within 30 days of the "date of receipt" of this document. Service may be accomplished by any of the procedures identified in WAC 371-08-305(10). "Date of receipt" is defined at RCW 43.21B.001(2).

Be sure to do the following:

- Include a copy of this document that you are appealing with your *Notice of Appeal.*
- Serve and file your appeal in paper form; electronic copies are not accepted.

1. To file your appeal with the Pollution Control Hearings Board

Mail appeal to:	OR	Deliver your appeal in person to:
The Pollution Control Hearings Board PO Box 40903 Olympia WA 98504-0903		The Pollution Control Hearings Board 4224 – 6th Ave SE Rowe Six, Bldg 2 Lacey WA 98503

2. To serve your appeal on the Department of Ecology

Mail appeal to:

The Department of Ecology
Appeals Coordinator
P.O. Box 47608
Olympia WA 98504-7608

OR

Deliver your appeal in person to:

The Department of Ecology
Appeals Coordinator
300 Desmond Dr SE
Lacey WA 98503

3. And send a copy of your appeal to:

Andrew B. Dunn
Department of Ecology
Water Resources Program
Northwest Region Office
3190 - 160th Ave. SE
Bellevue, WA 98008-5452

For additional information visit the Environmental Hearings Office Website: http://www.eho.wa.gov . To find laws and agency rules visit the Washington State Legislature Website: http://www1.leg.wa.gov/CodeReviser .

If you have any questions, please contact Doug Wood with Ecology at (425) 649-7077.

Signed at Bellevue, Washington, this 10th day of DECEMBER, 2009.

Andrew B. Dunn, LG, LHG, Section Manager
Water Resources Program
Northwest Regional Office

BACKGROUND

Description and Purpose of Proposed Change

Groundwater Permit G1-25375P was issued on April 30, 1993 pursuant to an application filed on January 10, 1989 by the City Poulsbo.

The original application sought a new groundwater source to accommodate population growth in the area of the city east of downtown Poulsbo.

Well tests performed on the Pugh Road Well after completion confirmed it was capable of sustainable recovery at a pumping rate (Qi) of 650 gallons per minute (gpm).

Ecology in issuing permit G1-25375P found that existing annual quantities (Qa) of 1,893 acre-feet per year (afy) held by the City of Poulsbo was sufficient to supply the city's needs for the foreseeable future. Based on this finding the department determined that 735 afy of Qa assigned through G1-25375P would be supplemental (non-additive) with respect to the 1,893 afy of total system Qa.

Attributes of the Permit and Proposed Change

Table 1: Summary of Proposed Changes to Water Right Permit No.

Attributes	*Existing*	*Proposed*
Name	Poulsbo City	Poulsbo City
Priority Date	January 10, 1989	
Date of Application for Change		May 8, 2006
Instantaneous Quantity	650 gallons per minute	650 gallons per minute
Annual Quantity	735 acre-feet per year	735 acre-feet per year
Source	Pugh Road Well	Lincoln Well 2 Pugh Road Well
Point of Diversion or Withdrawal	SE/NW T26N/R01E-13	NW/NE T26N/R01E-13 SE/NW T26N/R01E-13
Purpose of Use	Municipal Supply	Municipal Supply
Period of Use	Year-round	Year-round
Place of Use	Area Served by City of Poulsbo	Current Water Service Area

References

The following documents and reports were used in the preparation of this report:

Dow, D.C. and Becker, J.E. (2007): City of Poulsbo Lincoln Well 2 Construction and Testing Report; Robinson, Noble, and Saltbush, Inc.

Kahle, S.C. (1998): Hydrogeology of Naval Submarine Base Bangor and Vicinity, Kitsap County, Washington; USGS Water Resources Investigation Report 97-4060.

Porter, R.L. and Ranger, D. (2007): City of Poulsbo Draft Water System Plan dated March, 2007; Gray and Osborn, Inc.

Purdy, J.W. (2000): Water level data to meet the provisions on the water right permit for the City of Poulsbo's Pugh Road Well (G1-25375P).

Sebren, M.B. (1988): Pumping Test of Well SO5 on Pugh Road; Robinson, Noble, Inc.

In addition to the documents cited above, Ecology records from the Water Resources Tracking System database (WRTS) and Well Log database were reviewed. Stream flow records for Dogfish Creek were obtained from the USGS Stream Stats website and from the Kitsap Public Utility District website.

Original maps for this report were created by the Water Resources Program staff using ArcGIS software. GIS data used for maps are from Ecology, DNR and KPUD databases. Other figures were created by the investigator using CorelDraw and MS Excel software.

Legal Requirements for Proposed Change

The following is a list of requirements that must be met prior to authorizing the proposed change:

Public Notice

Notice of the proposed change was published on May 17, 2006 and May 24, 2006 in the North Kitsap Herald.

State Environmental Policy Act (SEPA)

A water right application is subject to a SEPA threshold determination (i.e., an evaluation whether there are likely to be significant adverse environmental impacts) if any one of the following conditions are met.

- It is a surface water right application for more than 1 cubic feet per second, unless that project is for agricultural irrigation, in which case the threshold is increased to 50 cubic feet per second, so long as that irrigation project will not receive public subsidies;
- It is a groundwater right application for more than 2,250 gallons per minute;
- It is an application that, in combination with other water right applications for the same project, collectively exceed the amounts above;
- It is a part of a larger proposal that is subject to SEPA for other reasons (e.g., the need to obtain other permits that are not exempt from SEPA);
- It is part of a series of exempt actions that, together, trigger the need to do a threshold determination, as defined under WAC 197-11-305.

The subject application is categorically exempt from SEPA and a threshold determination since it does not meet any of the above conditions.

Water Resources Statutes and Case Law

Under Washington's Water Code and applicable case law, an examination for a water right change must include the following:

- A tentative determination must be made of the extent and validity of the right (*R.D. Merrill v. PCHB* and *Okanogan Wilderness League v. Town of Twisp*).
- RCW 90.03.570(1) and (2) state, that if specific conditions are fulfilled, a municipal water supplier is eligible for a change of water right as provided by RCW 90.03.380. This is true even if the right was not put to full beneficial use.
- RCW 90.03.386(3) requires a municipal water supplier to apply cost-effective water conservation measures as part of its water system planning. The water supplier must also evaluate the effects of delaying the use of inchoate water rights before it may increase use of those inchoate rights. RCW 90.03.320 requires Ecology to consider the public water supplier's use of conserved water when establishing a surface or ground water right construction schedule.

- Under RCW 90.44.100, a change that seeks to add additional or new points of withdrawal must tap the same body of groundwater, and may not enlarge the right as expressed in the original permit or certificate.
- RCW 90.44.100 additionally requires that change not impair existing rights, that water be available at the proposed new point of withdrawal, that use is beneficial, and that approval not prove detrimental to the public interest.

INVESTIGATION

History of Water Use

Groundwater Permit G1-25375P was issued to the City of Poulsbo on April 30, 1993, with a maximum instantaneous rate of withdrawal (Qi) of 650 gallons per minute (gpm) and an annual maximum withdrawal (Qa) of 735 acre-feet per year (afy). The permit states that total system Qa is 1,893 afy.

The City of Poulsbo first utilized springs located on the slopes above Dogfish Creek (Crystal Springs; SWC 2115) and then more extensive springs adjacent to Dogfish Creek (Big Valley Springs; SWC 5585) to supply water to what was then a small community.

Beginning in the late 1960s the city began to replace production with groundwater sources. Since the city's existing surface water rights were believed to contain sufficient Qa to satisfy growth beyond what was then anticipated, groundwater rights issued between 1969 and 1993 were issued with annual quantities tied to those that would result from full utilization of the three surface water rights issued prior to that time (Certificates 2115, 5585, and 8525 if fully utilized would produce an annual quantity of 1,735 afy). The certificate for G1-00643C (Bus Barn Well) has no reference to whether the 160 afy allocated is related to annual quantities associated with other rights

Based on material supplied by the City of Poulsbo the current well (Pugh Road Well) has produced a maximum Qi of 650 gpm, but to date the annual quantity has not exceeded 242 afy. The 2007 Draft Water System plan reports that the Pugh Road Well currently (2007) has a maximum pumping capacity of 480 gpm. The loss of production capacity is reportedly due to bacterial growth surrounding the screened portion of the well. Several efforts to rehabilitate the well have resulted in only marginal improvement to capacity.

The present application for change is intended to provide additional pumping capacity which will allow full development of the permitted Qi and Qa, thus allowing perfection of the water right.

Proposed Use

Permit G1-25375P was issued to serve municipal purposes. The present application seeks no change in purpose of use.

Measuring and Reporting Water Use

RCW 90.03.360 requires that the owner of any water diversion maintain substantial controlling works and a measuring device. It must be constructed and maintained to permit accurate measurement and practical regulation of the flow of water diverted. Technical requirements for the measuring and reporting of water use are described in WAC 173-173. Measuring water at the source of a surface water diversion or ground water withdrawal before the water is put to beneficial use is essential to effectively manage water supplies. Successful water supply management requires knowing how much water is actually being used and whether there is any more water in specific areas available for new uses. Accordingly, this decision contains provisions addressing the measuring and reporting of the quantities of water withdrawn or diverted.

The existing permit issued in 1993 does not contain a provision for the measurement and reporting of water use. Such a provision will be added to the provisions as part of any decision made through this application for change.

Well Tags

WAC 173-160 contains requirements for well drillers, system operators and/or owners to tag new and existing wells with identification tags supplied by Ecology. The well identification program creates a standard system to identify all newly constructed or existing wells, so that property owners and various agencies can readily share well data. In addition, Ecology field staff use the well tag to identify the well. Accordingly, this decision contains provisions requiring each well to be tagged with a unique identification number.

Other Rights Held by the City of Poulsbo

Ecology records indicate that the City of Poulsbo has water rights totaling some 3,118 gpm and 1,893 afy as represented by 6 water right certificates and 2 permits. Since the surface water rights are not currently in use, current production capability is limited to well capacity. The Draft 2007 Water System plan for the City of Poulsbo indicates that current production capacity is 2,135 gpm with maximum annual amount of 1,001 acre-feet.

Table 2: Water Rights held by the City of Poulsbo						
File #	**Cert #**	**Priority Date**	**Qi (gpm)**	**Qa_A (afy)***	**Qa_N (afy)***	**Source Name**
S1-*05585C	2115	9/24/1941	539	867		Westside Well
S1-*11528C	5585	7/17/1952	449	723		Big Valley Springs #1
S1-*16431C	8525	10/24/1960	90	145		Big Valley Springs #2
G1-*08457C	6087	12/30/1966	475		396	Lincoln Well
G1-00643C		2/13/1969	100		160	Bus Barn Well
G1-23707C		10/14/1980	215		344	Big Valley Well #1
G1-25375P		1/10/1989	650	158	735	Pugh Rd. Well
G1-27192P		6/15/1993	600		672	Big Valley Well #2
Total			**3,118**	**1,893**	**2,169**	

*Qa_A=Additive Annual Quantity; Qa_N=Non-Additive Annual Quantity

Hydrologic/Hydrogeologic Evaluation

The original Pugh Road well and the proposed new point of withdrawal sought through this change application are completed within what is regionally mapped as the Permeable Interbeds (QC1pi).

In Water Resources Investigations Report 97-4060 (Kahle, 1998), the USGS places QC1pi within the Upper Confining Unit (QC1), which is described as follows:

QC1 *Low permeability unit consisting mostly of glaciolacustrian silt and clay (Lawton Clay) and underlying nonglacial iron-oxide cemented sand, silt, and gravel, with lenses of silty peat and dispersed organic detritus (upper Whidbey Formation). Unit may include fine-grained facies of Vashon Advance outwash, clay and gravelly clay (Olympia (?) nonglacial deposits), and/or thin discontinuous till and outwash sand (Possession Drift). Permeable Interbeds (QC1pi) are sand and gravel zones within QC1 that are sufficiently thick to delineate.*

The USGS (Kahle, 1998) has mapped a lens of QC1pi beneath area where both the Pugh Road Well and Lincoln Well 2 are situated. Poulsbo consultants Robinson, Noble, Saltbush Inc (RNS), who have extensive experience in the Kitsap area, have mapped the boundaries of the Qpi to be slightly different than those shown by the USGS, but both agree that the occurrence tapped by the Pugh Road Well and Lincoln Well 2 do not extend north beyond the East Fork of Dogfish Creek.

The USGS (Kahle, 1998) indicates that flow within the Poulsbo lens of QC1pi is westward toward Liberty Bay and the lower reaches of Dogfish Creek.

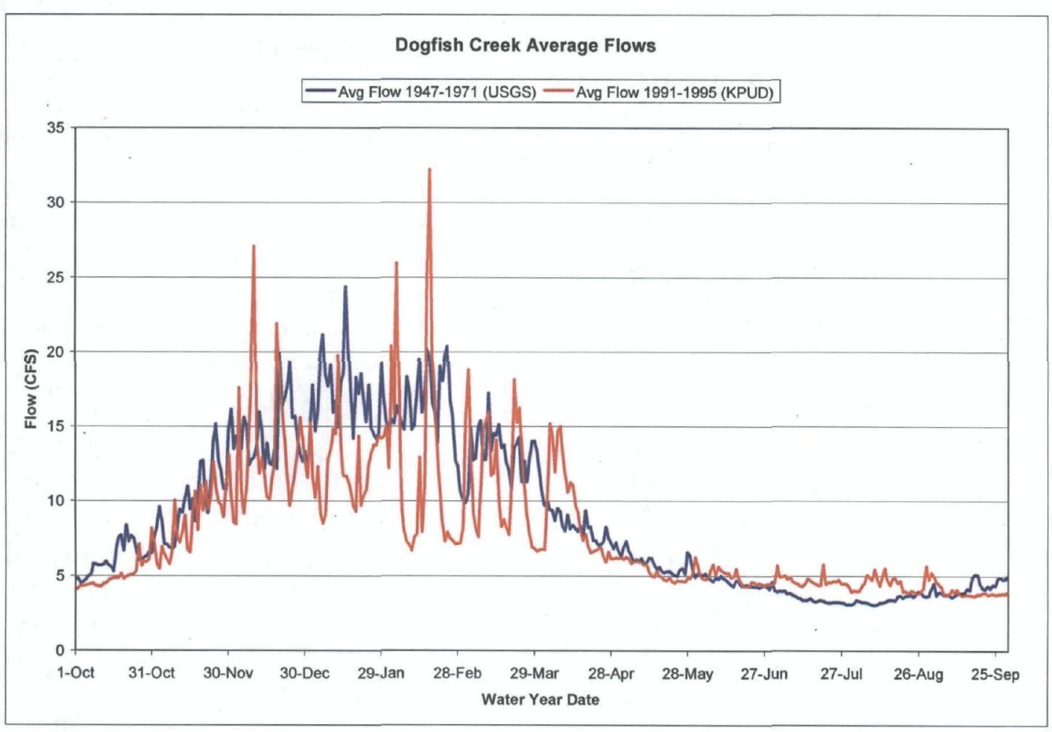

Figure 1: Dogfish Creek Average Daily Stream Flow for 1947-1971 (USGS) and 1991-1995 (KPUD).

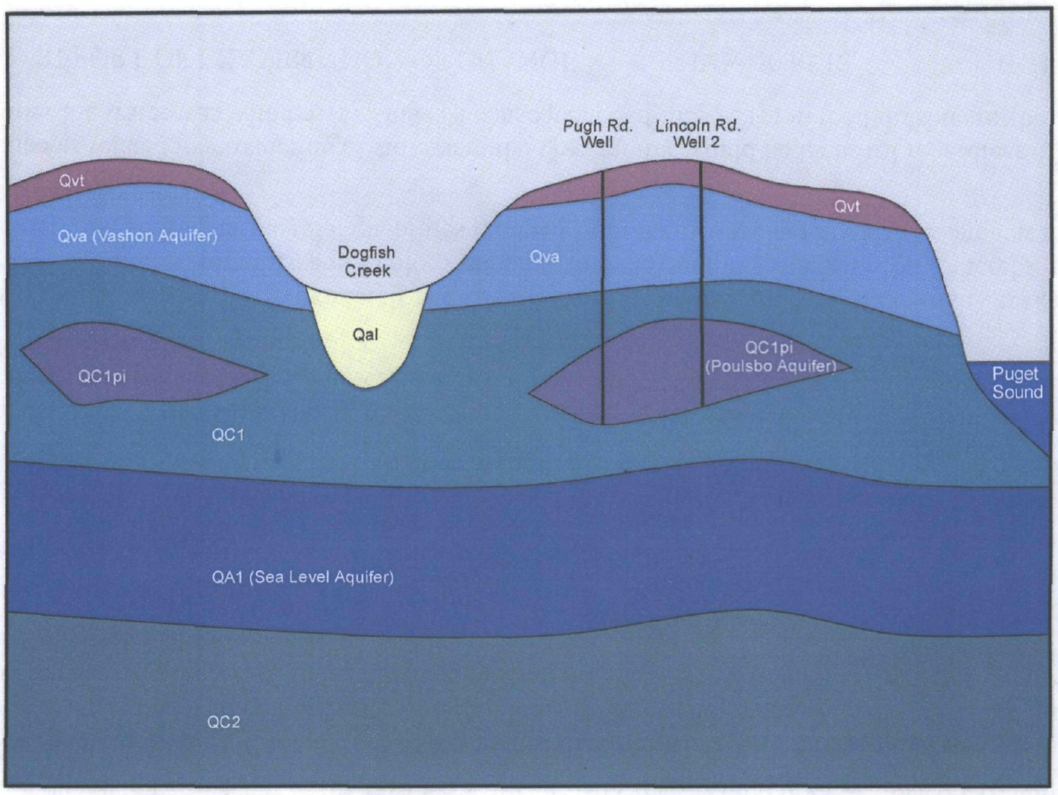

Figure 2: Schematic E-W Cross-Section through Poulsbo Area

The USGS maintained a stream gage on Dogfish Creek from 1947 to 1998, although much data is missing from the period from 1971 to 1998. Kitsap Public Utility District (KPUD) maintained a gage from 1991 to 1998. From the KPUD stream data it can seen that storm events can influence average stream flows. Notably 1997 had three storm events, in January, March and April that significantly raised average flows for the years 1991 to 1997 (Figure 1).

It is not known whether the USGS and KPUD monitored Dogfish Creek flows at the same location. The KPUD data appears to be measured at point upstream of the location of the USGS gage.

Studies by the USGS (Booth, 1991; Booth and Jackson, 1997; Booth et al., 2002) have found that urbanization of forested areas can result in decreased groundwater recharge in conjunction with increased surface run-off, particularly during storm events.

The hydrographs in Figure 1 can be interpreted as indicating that development in the Poulsbo area resulted in increased flashiness of streams. The data does not however appear to show decreased summer base flows that would accompany a reduction of groundwater recharge in the catchment basin, except perhaps in September and October.

Impairment Considerations

Potential Impairment to Regulated Streams

Dogfish Creek is closed to further appropriation under Chapter 173-515 WAC. Any impact through the proposed change that would result in an increased amount of water being diverted from Dogfish Creek would be contrary to the intent and purpose of the stream closure, and therefore would be considered detrimental to public interest. Such a change in impacts would not, however, be considered an impairment.

Potential Impairment of other Water Rights

There are three concepts that are important when considering whether a withdrawal of water from a well would impair another existing water right. The concepts are defined as follows:

Impairment is an adverse impact on the physical availability of water for a beneficial use that is entitled to protection i.e. water rights that are both senior and junior in priority to the right the applicant seeks to change.

Qualifying ground water withdrawal facilities are defined as those wells which in the opinion of the Department are adequately constructed. An adequately constructed well is one that (a) is constructed in compliance with well construction requirements; (b) fully penetrates the saturated thickness of an aquifer or withdraws water from a reasonable and feasible pumping lift (WAC 173-150); (c) the withdrawal facilities must be able to accommodate a reasonable variation in seasonal pumping water levels; and (d) the withdrawal facilities including pumping facilities must be properly sized to the ability of the aquifer to produce water.

Well interference may occur when several wells penetrate and withdraw ground water from the same aquifer. Each pumping well creates a drawdown cone. When several wells pump from the same aquifer, well density, aquifer characteristics, and pumping demand may result in individual drawdown cones that intersect and form a composite drawdown cone. At any point in an aquifer, the composite drawdown caused by pumping wells will be greatly

influenced by the transmissivity (T) of the aquifer. In aquifers with high Ts, composite drawdown will generally be much less than in aquifers with similar properties but with low Ts. Transmissivity is related to hydraulic conductivity (K) and the saturated thickness (b) of an aquifer by the relationship T=Kb.

An aquifer's hydraulic conductivity (K) is derived from the physical properties of both the fluid and geologic materials that form an aquifer. Once formed, an aquifer's saturated thickness (b) is used to calculate aquifer transmissivity. For regions of similar K in an aquifer, a greater saturated thickness will result in higher T than a thinner saturated thickness. As a result, regions of similar K in an aquifer with a large saturated thickness will experience less composite drawdown or well interference than with a small saturated thickness.

Some conditions, however, will increase or steepen composite drawdown in an aquifer. For instance, where characteristics (such as very fine, clay-rich, or poorly sorted sediments) of an unconfined aquifer cause significant drawdown relative to the saturated thickness, the composite drawdown will increase as saturated thickness is reduced and T becomes smaller. Additionally, in regions where negative or no-flow boundaries occur, such as near the edges of a valley fill aquifer where it is bounded by bedrock, composite drawdown will be steeper than in the central part (generally the greatest thickness region) of the aquifer. Consequently, it is commonly understood that the greatest composite drawdown or well interference is more likely to occur in regions of low transmissivities, thin saturated thicknesses and near negative or no-flow boundaries than in regions of high transmissivities, large saturated thicknesses, and away from negative or no-flow boundaries.

The Vashon Aquifer (Qva in Figure 2) is typically confined except where overlying till (Qvt) has been eroded, such as is encountered in valleys draining the upland areas of the Poulsbo area and along the shores of Puget Sound. The Poulsbo Aquifer (QC1pi) is a confined aquifer completely contained within an aquitard (QC1).

Base flows to streams in the Poulsbo area are supported by groundwater flow, primarily from areas where streams are underlain by the Qva (Vashon) Aquifer. In some places deeper aquifers are exposed by erosion, in which case base flows can be supported by groundwater from them. Dogfish creek base flows do not appear to be supported directly by deeper aquifers in the area north and east of the location of the proposed new well.

The Qva aquifer has been interpreted as missing within this area by Poulsbo consultants RNS and by the USGS (Kahle, 1997). This likely limits pumping impacts on the Qva to areas south of the location of the East Fork of Dogfish Creek.

Pumping from deeper, confined aquifers is compensated by increased leakage through bounding aquitards. An estimate of how this kind of pumping induced recharge can impact shallower aquifers can be accomplished by examining the pumping drawdown cone within the confined aquifer and then calculating recharge quantities within the cone using the Darcy Equation. Flow in this calculation is proportional to the difference in head between the static level and drawdown level of the potentiometric head of the confined aquifer.

Robinson, Noble, Saltbush Inc. (RNS), consultants to the City of Poulsbo, estimate that pumping impacts would be concentrated in area where the potentiometric head of the QC1pi aquifer is at an elevation below the base of the Qva aquifer. They contend that the Qva is perched beyond the reach of induced downward recharge, and thus would not cause impacts to streams in hydraulic connection to the Qva aquifer. RNS however produces no evidence that the QC1 aquitard is not fully saturated, or that QC1pi is not fully saturated. One of these conditions would have to be true for the upper aquifer to not be a source for pumping induced downward leakage.

In the area north and east of the Lincoln Well 2, where the Qva is missing, it can be reasonably concluded that streams, including the upper reaches of the East Fork of Dogfish Creek, would not be affected by pumping.

The overall morphology of the QC1pi and the placement of the original and additional wells suggest that pumping from either the one original well or from both wells, so long as there is not increase in the total pumping rate, will have an equal impact with respect to induced recharge from the shallower Qva aquifer, and thus on groundwater flow into creeks hydraulically connected to the Qva.

Public Interest Considerations

Effects on Fisheries Resources

Both the original point of withdrawal (Pugh Road Well) and the proposed additional point of withdrawal (Lincoln Well 2) are completed in the same aquifer, which is in limited hydraulic connection with regulated streams.

Hydrogeological impacts that would occur through pumping only at the original point of withdrawal would be directed principally within the QC1pi aquifer, and then directed outward and upward as the impacts are propagated beyond the boundaries of the source aquifer.

The Lincoln Well 2 is located at approximately the same distance from the east fork of Dogfish Creek as the Pugh Road Well. RNS concludes from this, and Ecology concurs, that the pumping impacts would therefore likely be equal on the east fork, so long as the total quantities pumped from the two wells remains the same as that permitted for the Pugh Road Well.

Long term impacts related to a reduction of storage in the Qva aquifer would be identical regardless of where in the Poulsbo Aquifer the water was withdrawn. This is a consequence of the QC1pi in the Poulsbo area being

completely enclosed within the QC1 aquitard and therefore not independently discharging to either a surface water body on the Kitsap Peninsula or to Puget Sound. Most of the pumping induced recharge therefore originates from the Qva. A small quantity of recharge may originate from the confining aquitard or deeper aquifers, but this also would be compensated by recharge from the Qva, minus an amount diverted from direct discharge to Puget Sound.

In order to fully understand the public interest considerations of the proposed change, the history of water resource development by the City of Poulsbo is prudent. The city was initially issued surface water rights for springs located adjacent to and in close proximity to the mainstem of Dogfish Creek (Big Creek Springs and Crystal Springs).

These water rights authorize the diversion of up to 2.4 cfs (1,078 gpm) from sources in direct hydraulic connection with Dogfish Creek, which for 5 months of a typical year represents more than half of the flow of the creek (Figure 1).

From the late 1960's until the early 1990's Ecology and its predecessor agencies have approved the issuance of water right permits, certificates and changes that moved the bulk of the city's production from these surface water sources to wells completed in aquifers with less direct hydraulic connections to surface water bodies. In all of these cases the annual quantities were tied to the maximum potential production capacity of the three springs by issuing these as non-additive rights (supplemental).

Some of the non-additive rights are completed in deeper aquifers that, at least in part, derive their water from discharge to Puget Sound rather than from nearby surface water bodies. The cumulative impacts of the city's water production on local surface water bodies have therefore been reduced as a result. Even those wells that are completed in aquifers that directly contribute to surface water bodies only partially do so, with a portion of their discharge being directed to the Puget Sound or Liberty Bay shoreline.

As mentioned earlier in this report Ecology in 1993 estimated that 1,893 afy was sufficient to serve the city's needs up to a population of 12,977 people at an average usage of 130 gpd. In its most recent Water System Plan, the City of Poulsbo reports a population of 7,450 in 2005. At a rate of growth of 5% (population growth 1989-2005 is 4.6%), the population will exceed 12,977 by the year 2017 - nine years from the time this report was prepared.

The City of Poulsbo has a duty under state law to provide safe reliable water to its citizens. As such it is clearly in the public's interest for Ecology to assist the city in the performance of its duty so long as other public interests are served.

Analysis of public interest considerations support a conclusion that approval of the proposed additional point of withdrawal under groundwater Permit G1-25375P will not lead to negative impacts to surface water bodies and that the public interest will be best served by approval of the proposal.

Consideration of Protests and Comments

The Suquamish Tribe has raised objections to the change proposal based on their understanding of potential impacts of the proposed change to Tribal vested rights to water and to fisheries guaranteed by treaty.

While it is likely that long term impacts of groundwater withdrawals from the Kitsap Peninsula have had impacts to streams and to the total water resource balance, there is no evidence to support a finding that the surface water bodies in hydraulic connection with the wells that are subject of this report are impacted by withdrawals from these wells in a way that can be shown to be detrimental to the availability of groundwater claimed by the Suquamish Tribe or detrimental to the fish population of Dogfish Creek.

The Suquamish Tribe has pointed out that the City of Poulsbo did not complete one of the requirements that Ecology included in the original permit. Specifically, the City was instructed to drill a monitoring well located between the Pugh Road Well and Dogfish Creek.

A condition placed on approval of the additional well shall be that the City of Poulsbo completes construction of the monitoring well prior to connecting the Lincoln Well 2 to its water delivery system.

CONCLUSIONS

A review of the proposal to add an additional point of withdrawal under Groundwater Permit G1-25375P, of the relevant statutes and rules, and of the hydrogeology of the Poulsbo Area indicates that approval of the proposal is warranted.

Approval of an additional well will not result in an enlargement of the right as stipulated in its permit, impair existing rights, or prove detrimental to the public interest. The use for municipal purposes is beneficial, water is available at the new point of withdrawal and the same body of public groundwater is tapped by the additional well.

RECOMMENDATIONS

Based on the above investigation and conclusions, I recommend that the request for change to G1-25375P be approved in the amounts and within the limitations listed below and subject to the provisions beginning on Page 2, et seq.

Purpose of Use and Authorized Quantities

The amount of water recommended is a maximum limit and the water user may only use that amount of water within the specified limit that is reasonable and beneficial:

- 650 gpm*
- 735 acre-feet per year**
- Municipal Supply Purposes

Points of [Diversion Withdrawal]

Lincoln Well 2 - NW¼, NE¼, Section 13, Township 26 North, Range 1 East,W.M.

Pugh Road Well - SE¼, NW¼, Section 13, Township 26 North, Range 1 East,W.M.

Place of Use

As described on Page 1 of this Report of Examination.

Special Provision

The additional point of withdrawal as herein recommended for approved shall not be connected to the City of Poulsbo water delivery system prior to the completion of construction of the monitoring well described in the original permit issued April 30, 1993.

Report by: Douglas H. Wood Date: Dec. 10, 2009

Douglas H. Wood, P.Geo., LHG (952)
Water Resources Program

* The Qi of 650 gpm represents a cumulative maximum from all points of withdrawal under this permit.

** Total withdrawal from all sources will not exceed 1,893 acre-feet per year.

If you need this publication in an alternate format, please call Water Resources Program at (360) 407-6600. Persons with hearing loss can call 711 for Washington Relay Service. Persons with a speech disability can call 877-833-6341.

State of Washington Licensed Geologist Hydrogeologist 952

DOUGLAS H. WOOD

Poulsbo City
Permit Number CG1-25375
Sec.13, T 26N, R 01E W.M.
WRIA 15 - Kitsap County

DEPARTMENT OF ECOLOGY
State of Washington

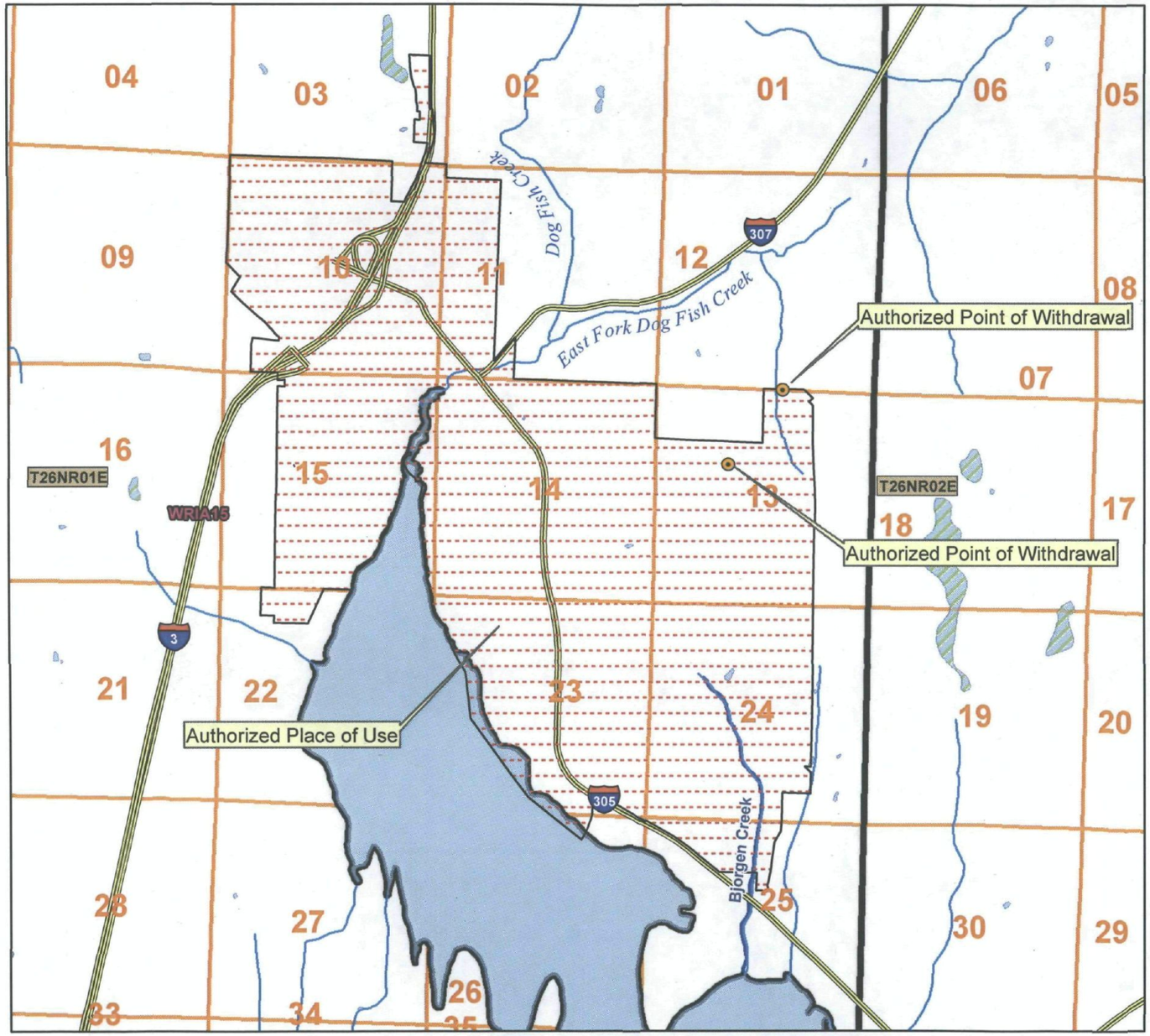

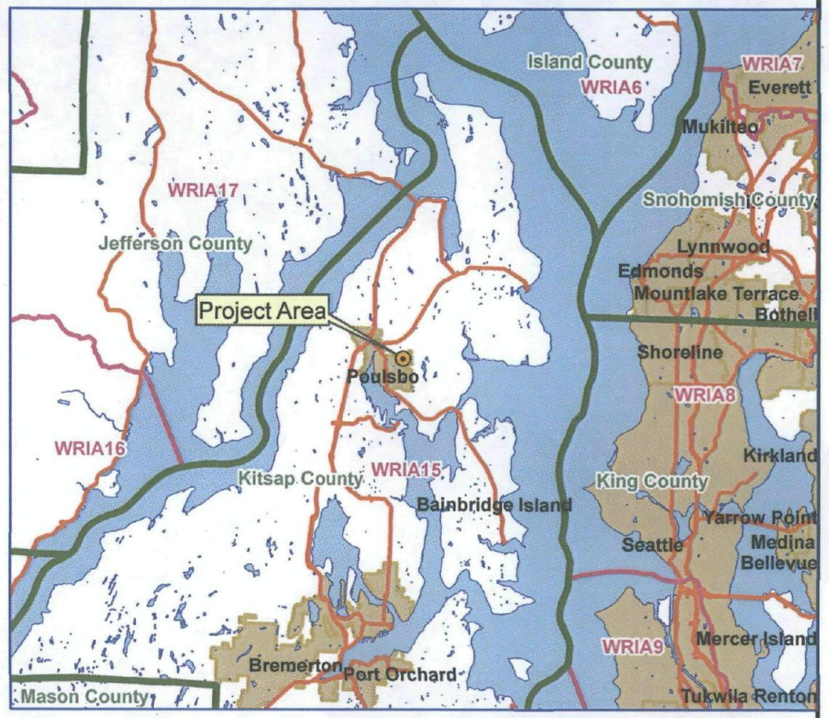

Legend

- County
- WRIA
- Highways
- Townships
- cities
- Sections
- Authorized Point of Withdrawal
- Authorized Place of Use

Place of use and point(s) of diversion/withdrawal are as defined on the cover sheet under the headings, 'LOCATION OF DIVERSION/WITHDRAWAL' and 'LEGAL DESCRIPTION OF PROPERTY ON WHICH WATER IS TO BE USED.'

Attachment 1

APPENDIX D

DESIGN AND CONSTRUCTION STANDARDS AND O&M STAFF EVALUATION

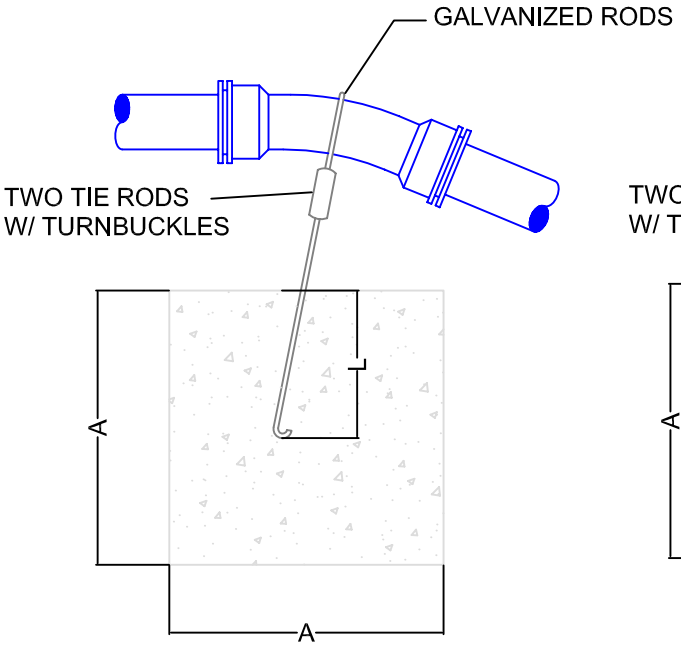

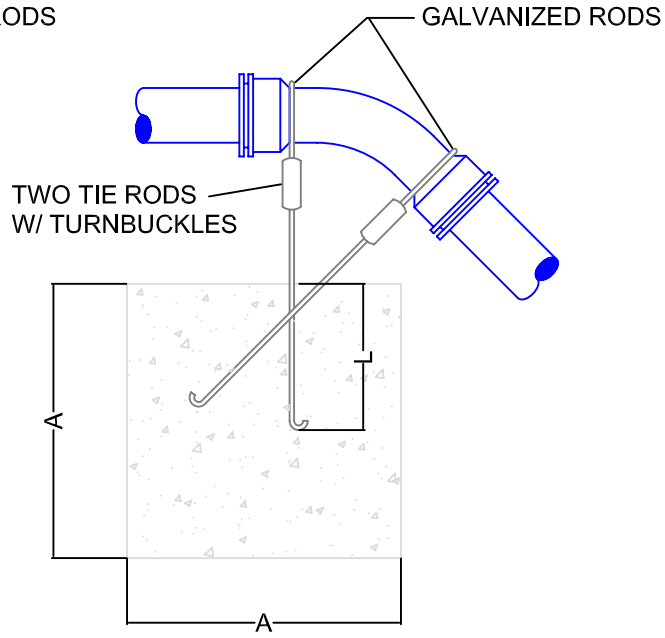

			3			
4"	250	11.25°	6	1.8	5/8"	17"
		22.5°	12	2.3		
		45°	22	2.8		
6"	250	11.25°	14	2.4	5/8"	17"
		22.5°	27	3.0		
		45°	50	3.7		
8"	250	11.25°	25	2.9	5/8"	17"
		22.5°	48	3.6		
		45°	89	4.5		
10"	250	11.25°	38	3.4	5/8"	17"
		22.5°	75	4.2		
		45°	139	5.2		
12"	250	11.25°	55	3.8	5/8"	17"
		22.5°	108	4.8		
		45°	200	5.8	7/8"	24"
14"	250	11.25°	75	4.2	5/8"	17"
		22.5°	147	5.3	3/4"	20"
		45°	272	6.5	1"	27"
16"	250	11.25°	98	4.6	5/8"	17"
		22.5°	192	5.8	7/8"	24"
		45°	355	7.1	1 1/8"	30"

* "A"= LENGTH, WIDTH, & DEPTH

NOTES:
1. CONCRETE BLOCKING IS BASED ON 250 PSI PRESSURE AND 3000 PSI CONCRETE
2. STEEL RODS SHALL BE HEAVILY COATED WITH ASPHALT EMULSION COATING

CITY OF POULSBO DEPARTMENT OF PUBLIC WORKS	VERTICAL / HORIZONTAL CONCRETE BLOCKING TIE BACK BLOCKS (NTS)	Detail 4-01 Approval Date: 02-13-07

SIZE	TEST PRESSURE (PSI)	THRUST AT FITTINGS IN POUNDS				
		A	B	C	D	E
		TEE AND DEAD ENDS	90° BEND	45° BEND	22.5° BEND	11.25° BEND
4"	250	3,140	4,440	2,405	1,225	615
6"	250	7,070	9,995	5,410	2,760	1,385
8"	250	12,565	17,770	9,620	4,905	2,465
10"	250	19,635	27,770	15,030	7,660	3,850
12"	250	28,275	39,985	21,640	11,030	5,545
14"	250	38,485	54,425	29,455	15,015	7,545
16"	250	50,265	71,085	38,470	19,615	9,855

SAFE BEARING LOADS IN LB./SQ. FT.
THE SAFE BEARING LOADS GIVEN IN THE FOLLOWING TABLE ARE FOR HORIZONTAL THRUSTS WHEN THE DEPTH OF COVER OVER THE PIPE EXCEEDS 2 FEET.

SOIL	SAFE BEARING LOAD LB. PER SQ. FT.
*MUCK, PEAT, ETC.	0
SOFT CLAY	1000
SAND	2000
SAND & GRAVEL	3000
CEMENTED W/ CLAY	4000
HARD SHALE	10000

*IN MUCK OR PEAT, ALL THRUSTS SHALL BE RESTRAINED BY PILES OR TIE RODS TO SOLID FOUNDATIONS OR BY REMOVAL OF MUCK OR PEAT AND REPLACEMENT WITH BALLAST OF SUFFICIENT STABILITY.

NOTES

1. DIVIDE THRUST BY SAFE BEARING LOAD TO DETERMINE REQUIRED AREA (IN SQUARE FEET) OF CONCRETE TO DISTRIBUTE LOAD.
2. AREAS MUST BE ADJUSTED FOR OTHER PIPE SIZES, PRESSURES AND SOIL CONDITIONS.
3. CONCRETE BLOCKING SHALL BE CAST IN PLACE AND HAVE A MINIMUM OF 1/4 SQUARE FOOT BEARING AGAINST THE FITTING.
4. THE BLOCK SHALL BEAR AGAINST THE FITTING ONLY AND SHALL BE CLEAR OF JOINTS TO PERMIT TAKING UP OR DISMANTLING OF FITTING.
5. THE CONTRACTOR SHALL INSTALL BLOCKING ADEQUATE TO WITHSTAND FULL TEST PRESSURE AS WELL AS TO CONTINUOUSLY WITHSTAND OPERATION PRESSURE UNDER ALL CONDITIONS OF SERVICE.
6. WRAP PIPE IN PLASTIC
7. PROVIDE TWO 1" MINIMUM DIAMETER RODS ON VALVES UP THROUGH 10" DIAMETER. VALVES LARGER THAN 10" REQUIRE SPECIAL TIE ROD DESIGN.
8. COAT BARE RODS WITH ASPHALT EMULSION COATING

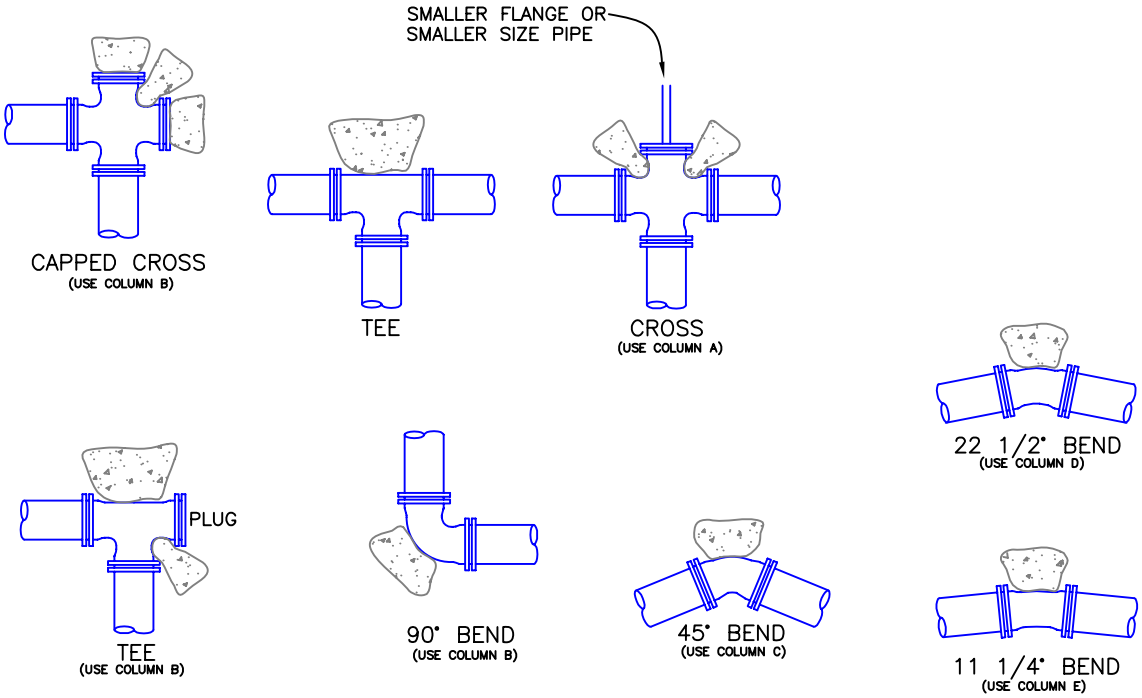

CITY OF POULSBO DEPARTMENT OF PUBLIC WORKS	HORIZONTAL THRUST BLOCKING (NTS)	Detail 4-02 Approval Date: 02-13-07

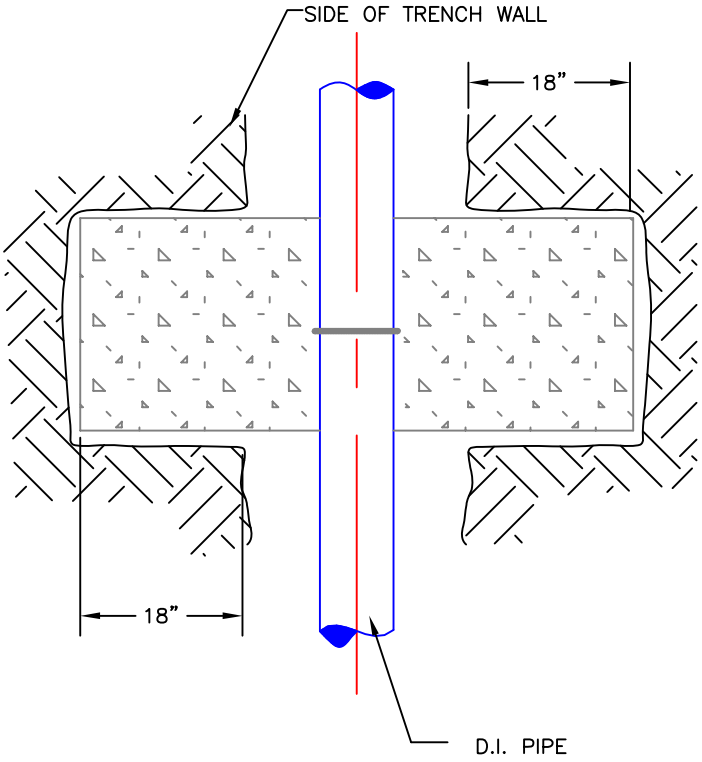

PIPE SIZE	DIMENSIONS (INCHES) A	B	C	D	E
4"	2.4	4.8	17	13	14.6
6"	3.5	6.9	18	14	14.5
8"	4.5	9.1	19	15	14.5
10"	5.6	11.1	20	16	14.4
12"	6.6	13.2	21	17	14.4
14"	7.7	15.3	22	18	14.3
16"	8.7	17.4	23	19	14.3
18"	9.8	19.5	24	20	14.2

NOTES:
SLOPES > 20% – PROVIDE CONCRETE SLOPE ANCHORS (20' TO 25' ON CENTERS) OR AS RECOMMENDED BY GEO–TECHNICAL ENGINEER OR USE FIELD LOCK GASKETS, WITH ENGR. APPROVAL.

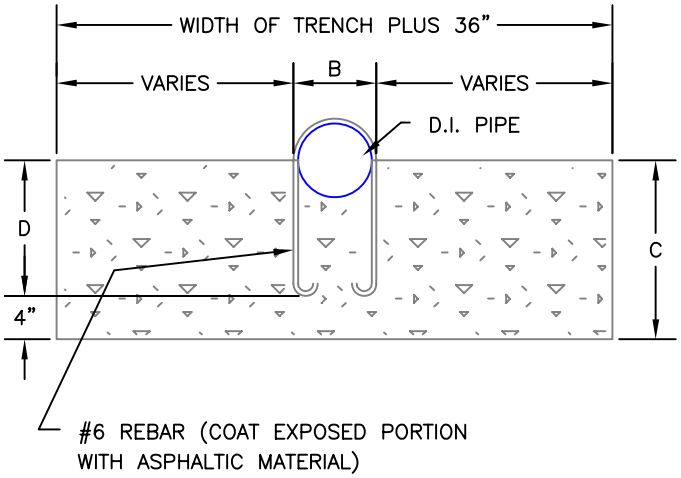

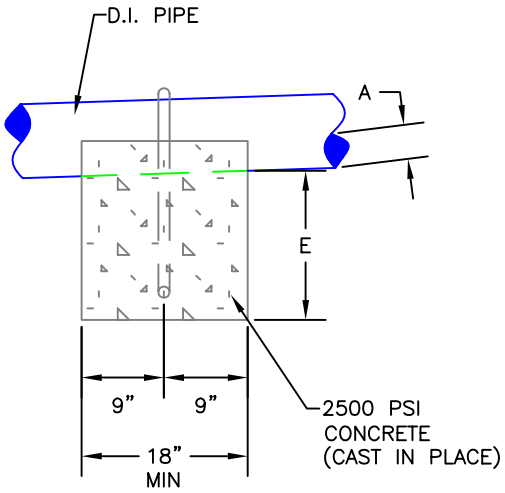

CITY OF POULSBO DEPARTMENT OF PUBLIC WORKS	CONCRETE SLOPE ANCHOR (NTS)	Detail 4–03 Approval Date: 02–13–07

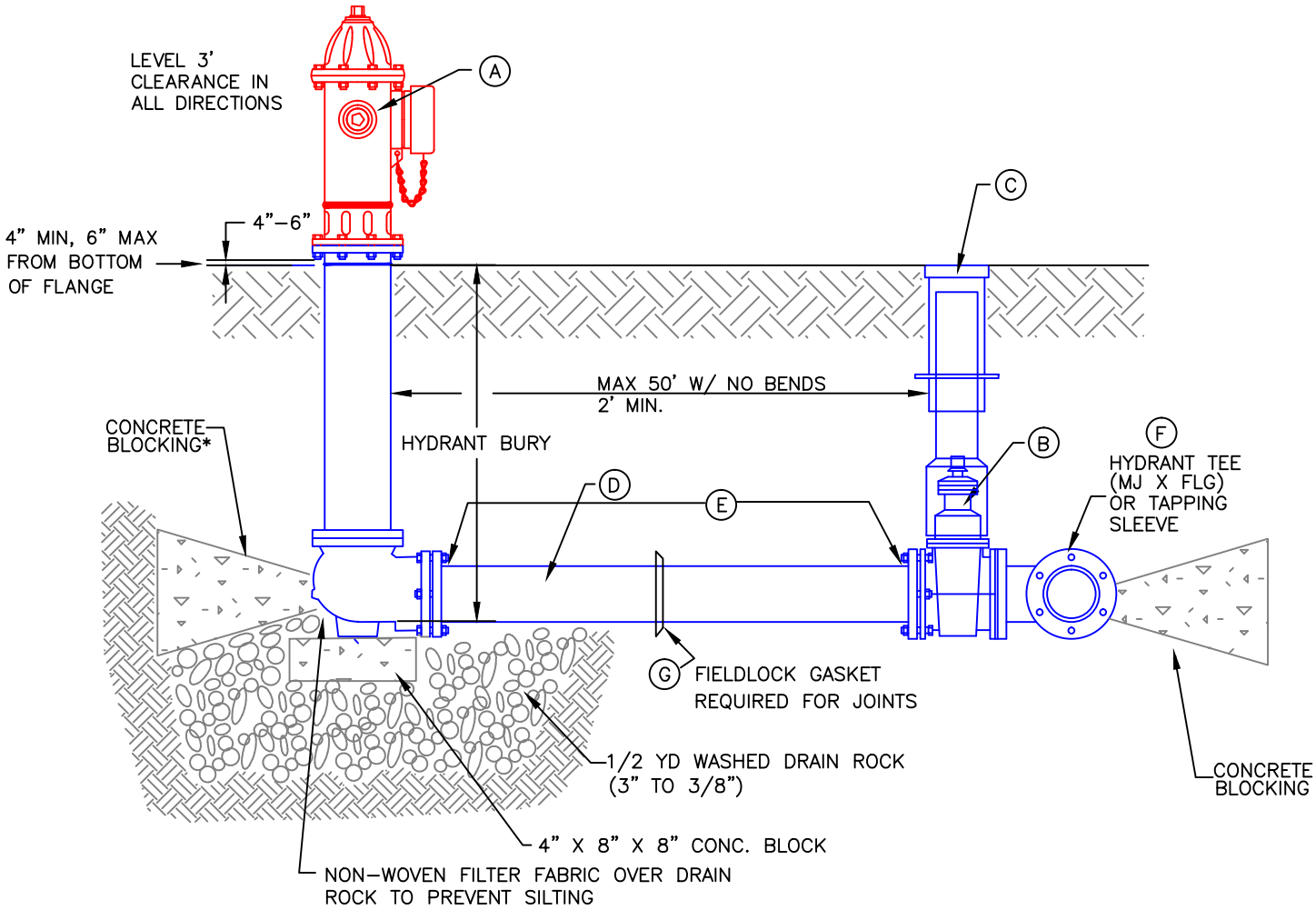

A 1–5 1/4" M.V.O. HYDRANT WITH 2–2 1/2" HOSE PORTS WITH NATIONAL STANDARD THREADS AND 5" PUMPER PORTS, WITH CITY OF SEATTLE THREADS AND 5"– 1/4 TURN STORZ ADAPTER

HYDRANT BRAND	MODEL	STORZ BRAND
MUELLER	CENTURION	RED HEAD
M&H	929	AWG
CLOW	F–2500, MEDALLION	(NO LOCKS)
WATEROUS	PACER	
AVK	SERIES 2780	

B 1 6" GATE VALVE, AWWA C–500, R/S, PARALLEL SEAT "O" RING STEM SEAL, MJ X FLG WITH LUGS

C 1 TWO PIECE CAST IRON VALVE BOX SIMILAR TO RICH MANUFACTURING TYPE 940 OR 5" C.I. SOILS PIPE VALVE BOX EXTENSION

D 6" DUCTILE IRON PIPE, CLASS 52, CUT TO FIT.

E MEGA LUG FOLLOWERS

F FULL BODY TAPPING SLEEVE, C.I., D.I., OR STAINLESS STEEL HYDRANT TEE (F X MJ)

G FIELDLOCK GASKET

NOTES:
1. FIRE HYDRANT EXTENSION IF REQUIRED
2. FIRE HYDRANT SHALL BE PAINTED WITH ENAMEL SAFETY RED

CITY OF POULSBO DEPARTMENT OF PUBLIC WORKS	STANDARD FIRE HYDRANT INSTALLATION (NTS)	Detail 4–05 Approval Date: 02–13–07 Revision approved: 2–1–13

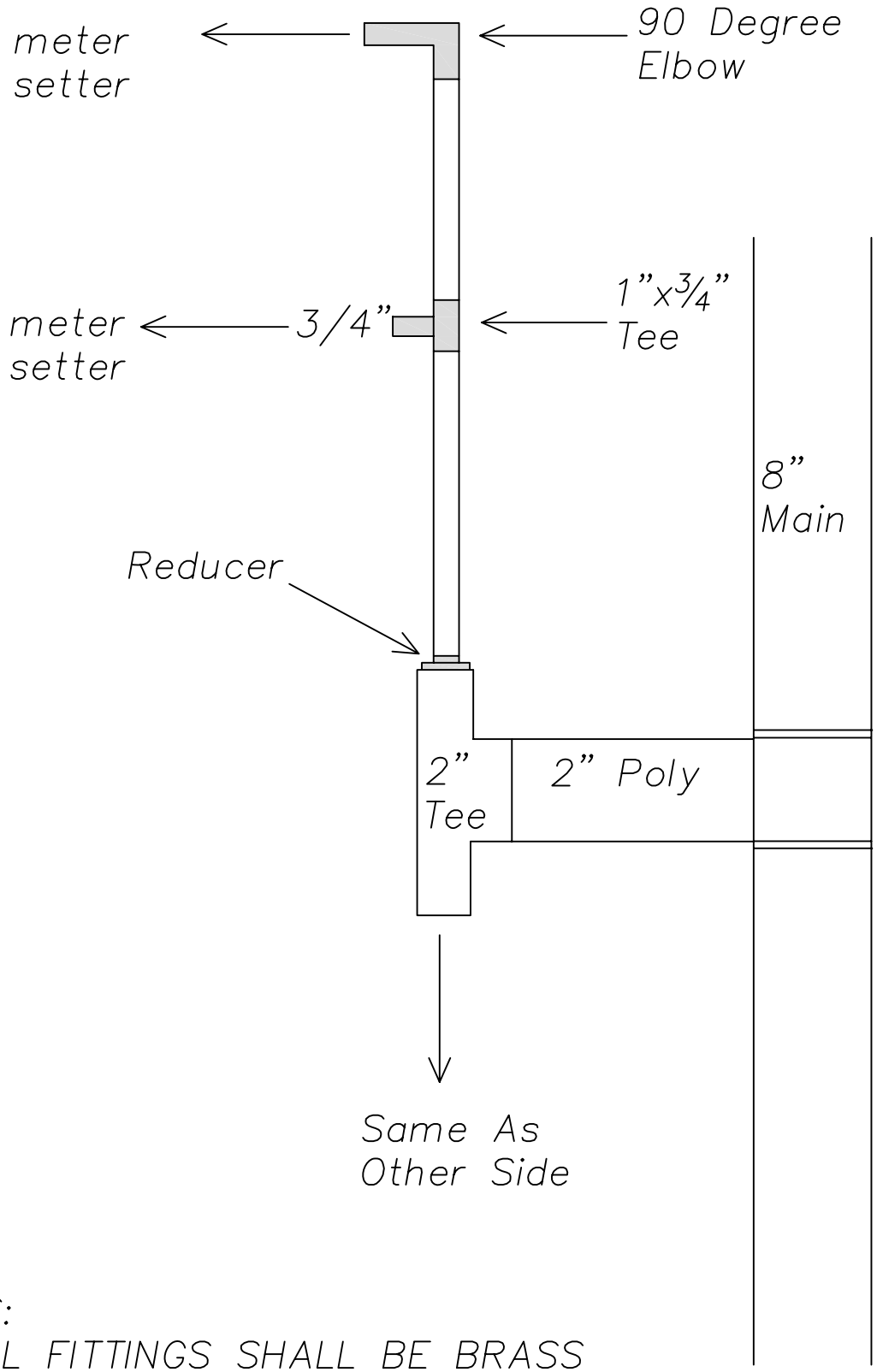

NOTES:

1. ALL FITTINGS SHALL BE BRASS

CITY OF POULSBO DEPARTMENT OF PUBLIC WORKS	QUAD WATER SERVICE	Detail 4-06 Approval Date: 02-13-07

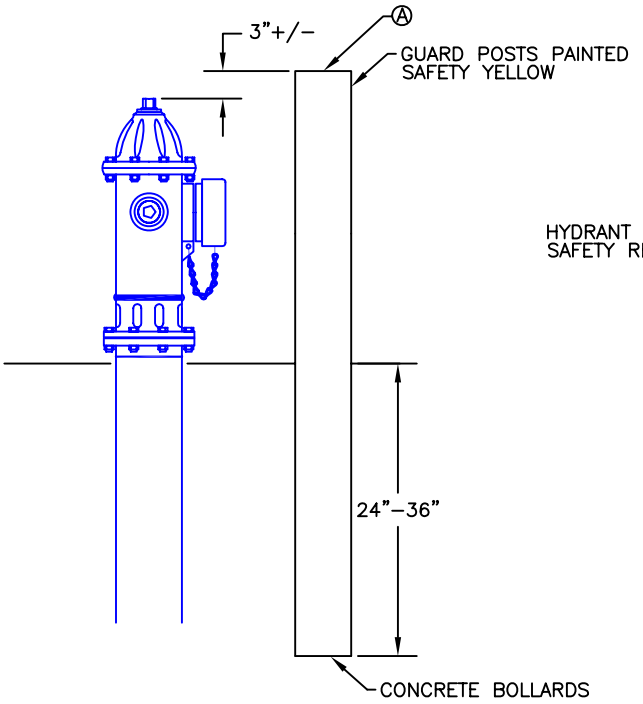

ELEVATION

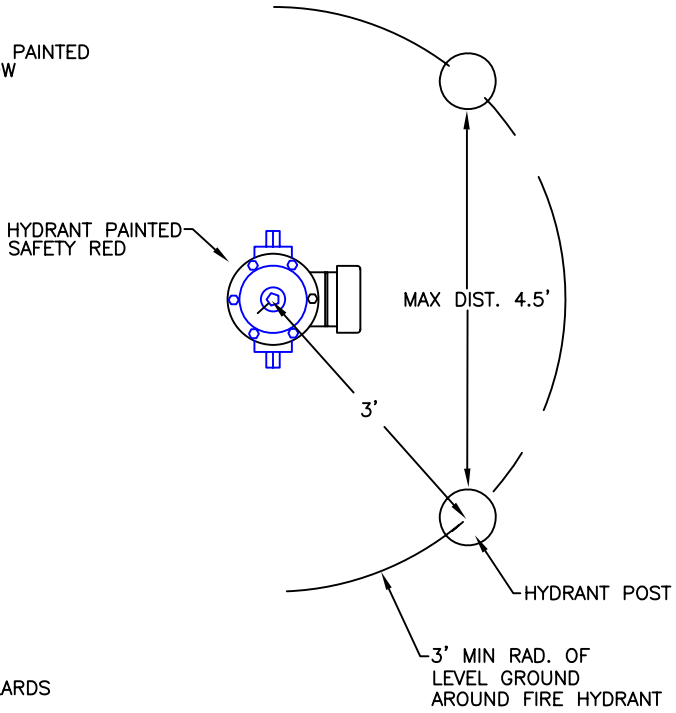

PLAN

FIRE HYDRANT GUARD POST

VALVE MARKER POST

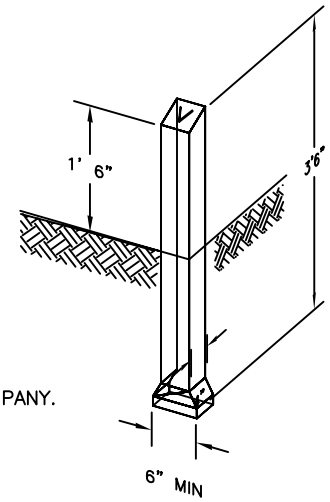

NOTES:

(A) 3" PLUS OR MINUS FROM TOP OF FIRE HYDRANT TO TOP OF HYDRANT GUARD POSTS.(POSTS PAINTED SAFETY YELLOW)

(B) VALVE MARKER POST SHALL BE EQUAL TO FOG TITE METER SEAL COMPANY. PAINT SAFETY BLUE

(C) VALVE MARKER POST TO BE USED FOR ALL MAINLINE VALVES OUTSIDE PAVED AREAS.

(D) POSTS REQUIRED WHEN HYDRANT IS LOCATED IN PAVED AREA POSTS FACING TRAFFIC.

CITY OF POULSBO DEPARTMENT OF PUBLIC WORKS	FIRE HYDRANT POST AND VALVE MARKER POST (NTS)	Detail 4-07 Approval Date: 02-13-07

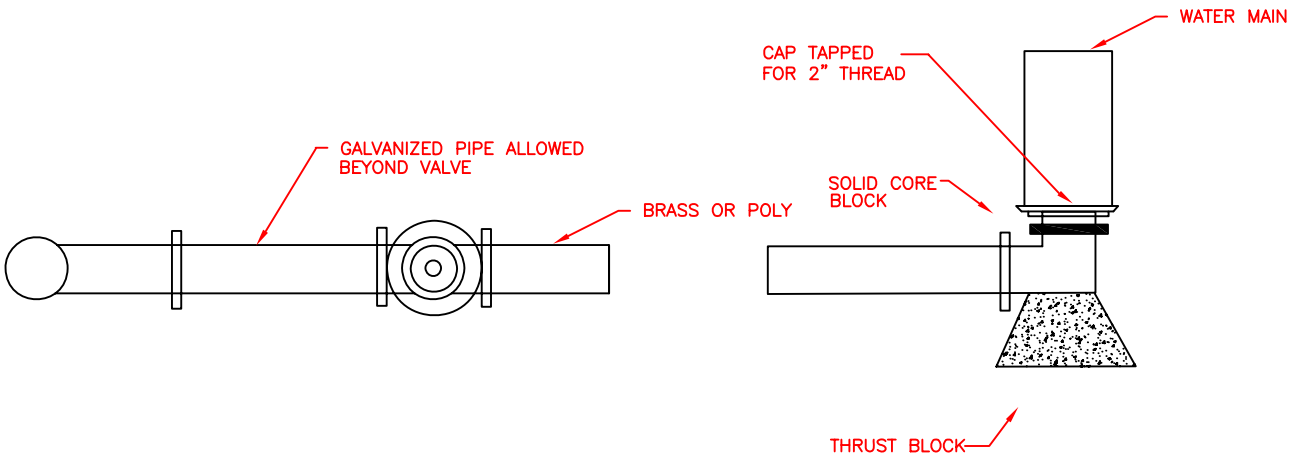

PLAN @ END OF LINE

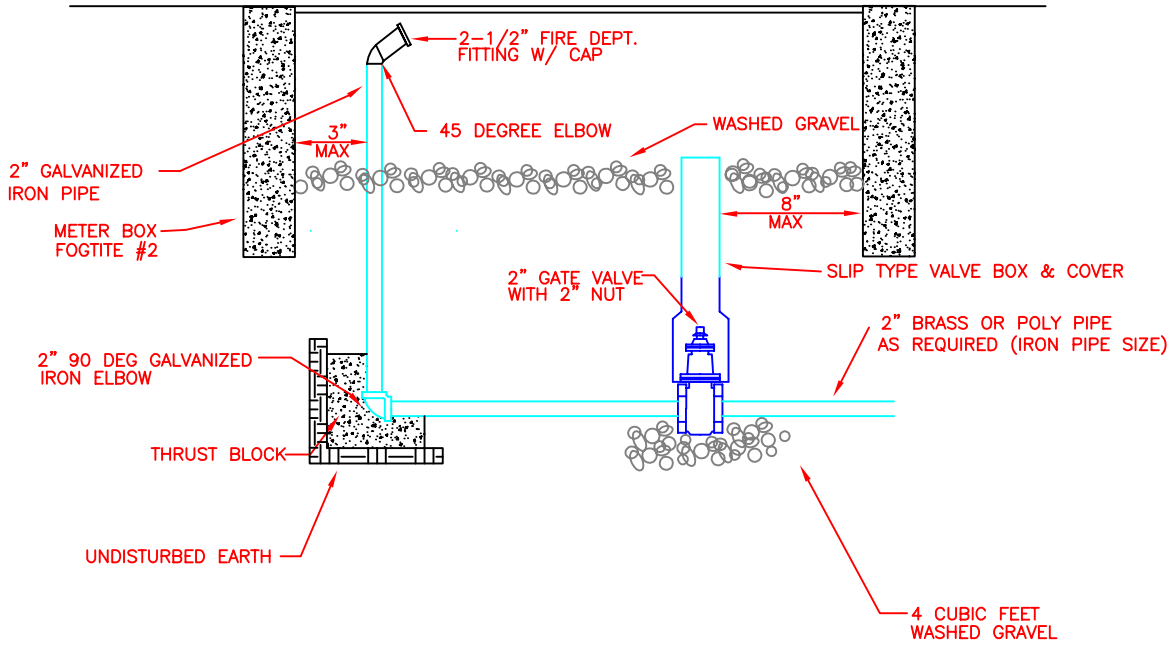

SECTION

NOTE
PLACE CONCRETE VALVE MARKER NEAR METER BOX
IN UNPAVED AREA

NOTES:

1. PLUG OR CAP SHALL BE SECURED WITH MEGA-LUG FITTING AS IN ADDITION TO THRUST BLOCK & TIE ROD.
2. VALVE MARKER SHALL BE INSTALLED FOR BLOW-OFFS INSTALLED IN UNPAVED AREAS. SEE VALVE MARKER DETAIL

CITY OF POULSBO DEPARTMENT OF PUBLIC WORKS	STANDARD BLOW-OFF ASSEMBLY DETAIL BELOW GROUND (NTS)	Detail 4-08-A Approval Date: 02-13-07

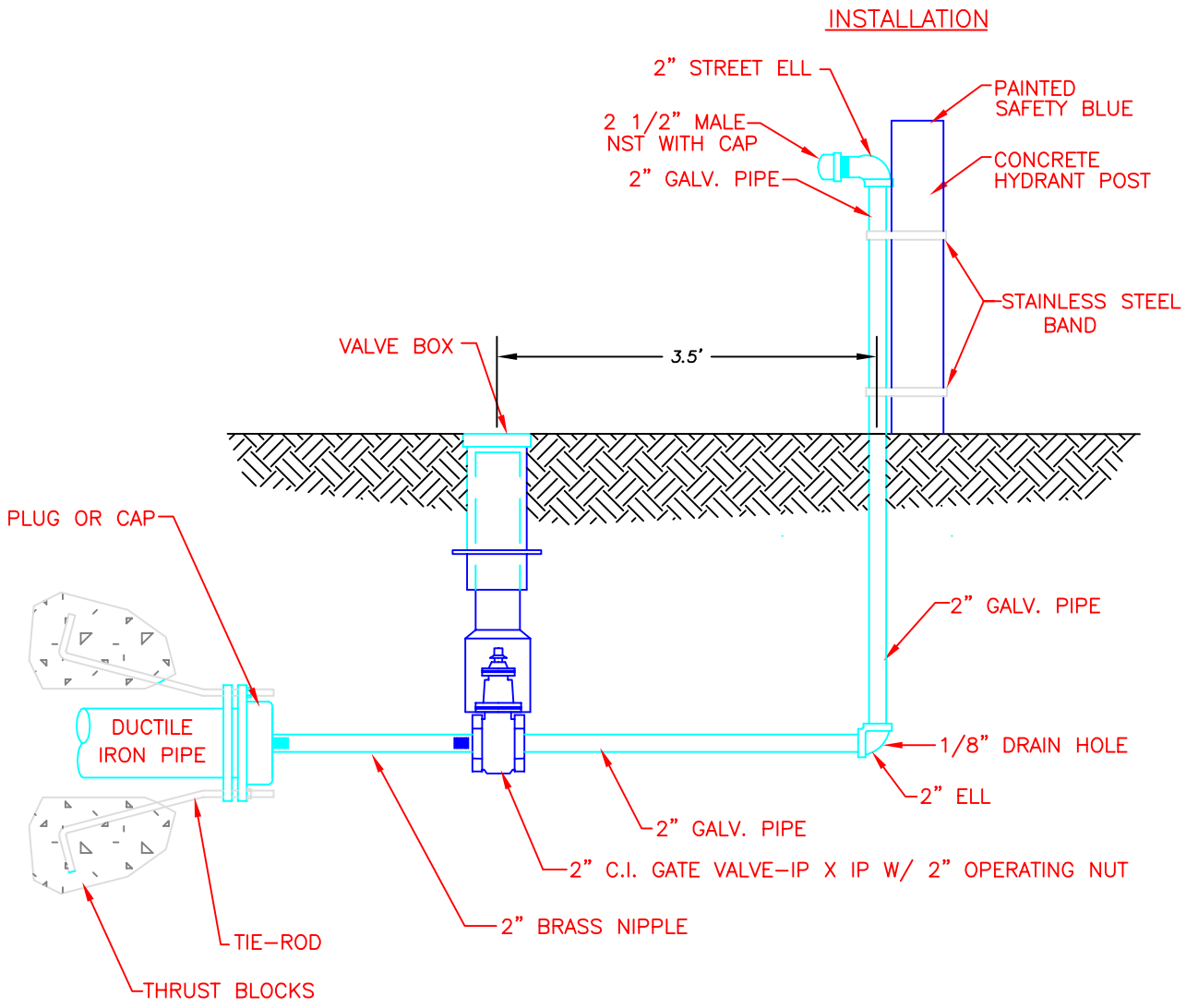

NOTES:

1. PLUG OR CAP WILL BE SECURED WITH MEGA-LUG FITTING AS AN ADDITION TO THRUST BLOCK & TIE ROD.

CITY OF POULSBO DEPARTMENT OF PUBLIC WORKS	STANDARD BLOW-OFF ASSEMBLY ABOVE GROUND (NTS)	Detail 4-08-B Approval Date: 02-13-07

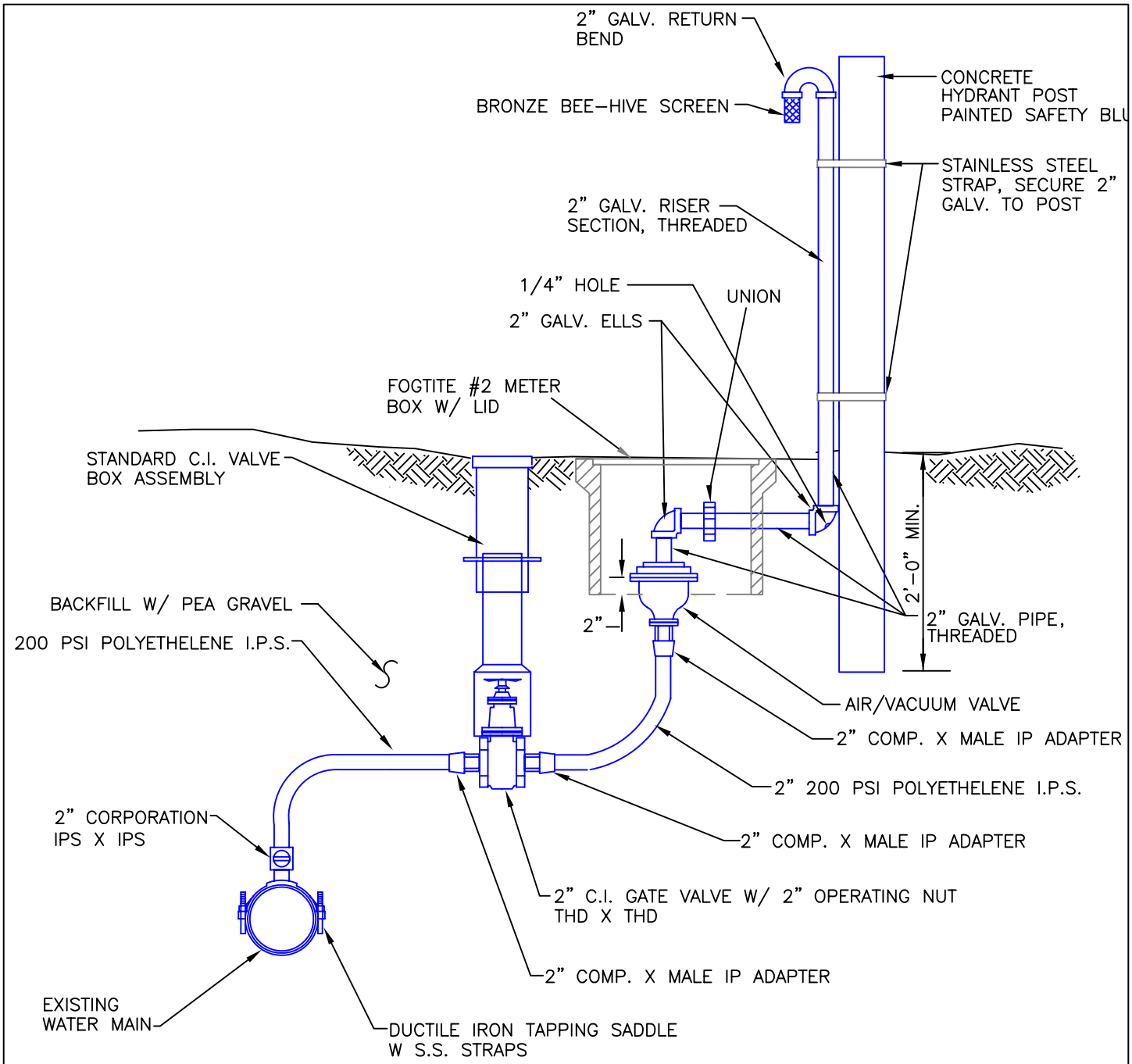

NOTE

1. USE APPROVED JOINT COMPOUND ON ALL THREADED CONNECTIONS.
2. PAINT 4X4 POST – SAFETY BLUE
3. AIR/VAC TO BE BURIED AS SHOWN FOR FREEZE PROTECTION.
4. LOCATION OF RISER SECTION TO BE APPROVED BY ENGINEER PRIOR TO INSTALLATION, AWAY FROM DRIVING SURFACE, ATTACHED TO 4X4 POST.
5. INSTALL UNION ON PIPING INSIDE BOX.

CITY OF POULSBO DEPARTMENT OF PUBLIC WORKS	2" AIR & VACUUM RELEASE VALVE ASSEMBLY 12" MAIN OR LARGER	Detail 4-09 Approval Date: 02-26-09

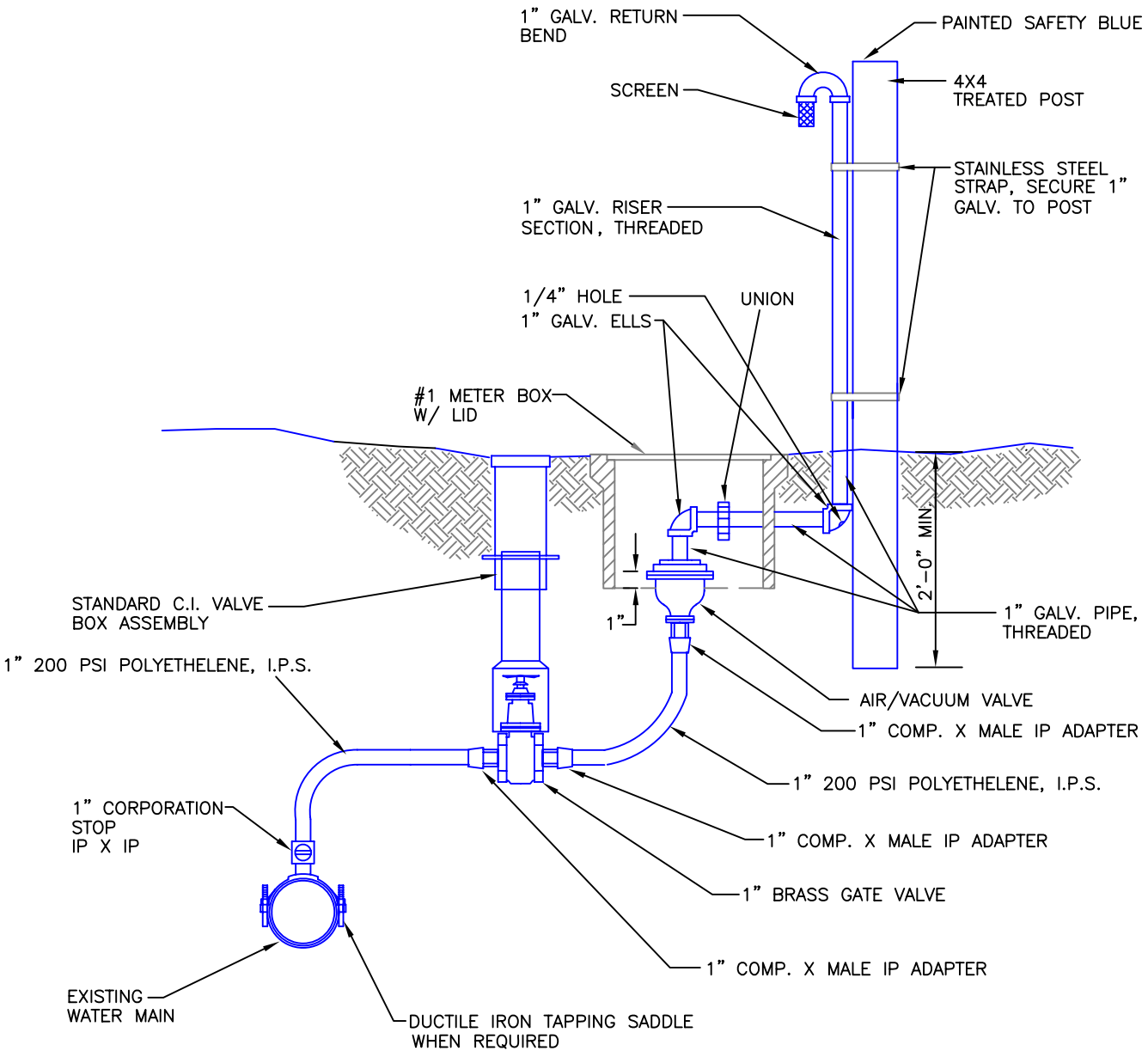

NOTE

1. USE APPROVED JOINT COMPOUND ON ALL THREADED CONNECTIONS.
2. PAINT 4X4 POST – SAFETY BLUE
3. AIR/VAC TO BE BURIED AS SHOWN FOR FREEZE PROTECTION.
4. LOCATION OF RISER SECTION TO BE APPROVED BY ENGINEER PRIOR TO INSTALLATION, AWAY FROM DRIVING SURFACE, ATTACHED TO 4X4 POST.
5. INSTALL UNION ON PIPING INSIDE BOX.

CITY OF POULSBO DEPARTMENT OF PUBLIC WORKS	1" AIR & VACUUM RELEASE VALVE ASSEMBLY 10" MAIN AND SMALLER	Detail 4-10 Approval Date: 02-26-09

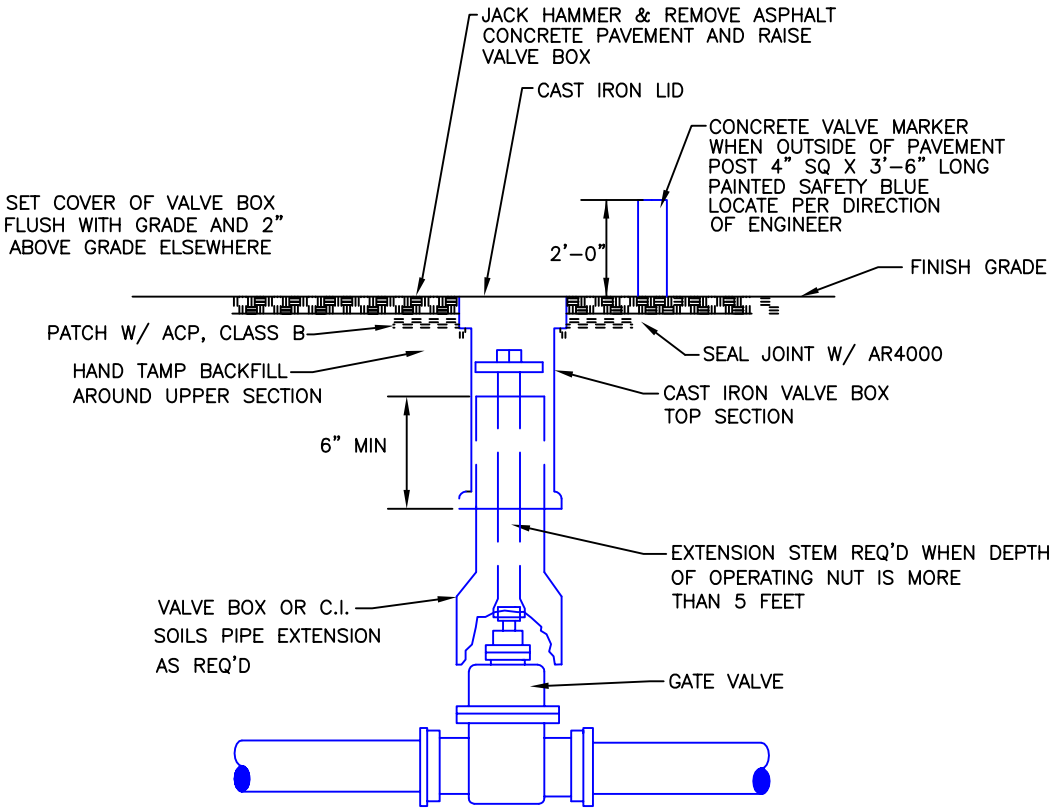

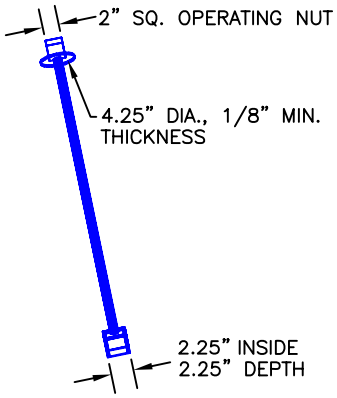

NOTES:

EXTENSIONS ARE REQUIRED WHEN THE VALVE NUT IS MORE THAN FIVE (5) FEET BELOW FINISHED GRADE. EXTENSIONS ARE TO BE A MINIMUM OF ONE (1) FOOT LONG. ONLY ONE EXTENSION TO BE USED PER VALVE.

VALVE BOX EXTENSIONS SHALL BE 5" C.I. SOILS PIPE-TYLER TY SEAL

NOTES:
1. ALL EXTENSIONS ARE TO BE MADE OF STEEL, SIZED AS NOTED, AND PAINTED WITH 2 COATS OF METAL PAINT.
2. RAISE THE VALVE BOX TO FINISH GRADE AFTER ASPHALT CONCRETE WORK IS COMPLETED BUT IN NO CASE LATER THAN 48 HOURS.

CITY OF POULSBO DEPARTMENT OF PUBLIC WORKS	VALVE OPERATING EXTENSION AND DETAIL (NTS)	Detail 4-11 Approval Date: 02-13-07

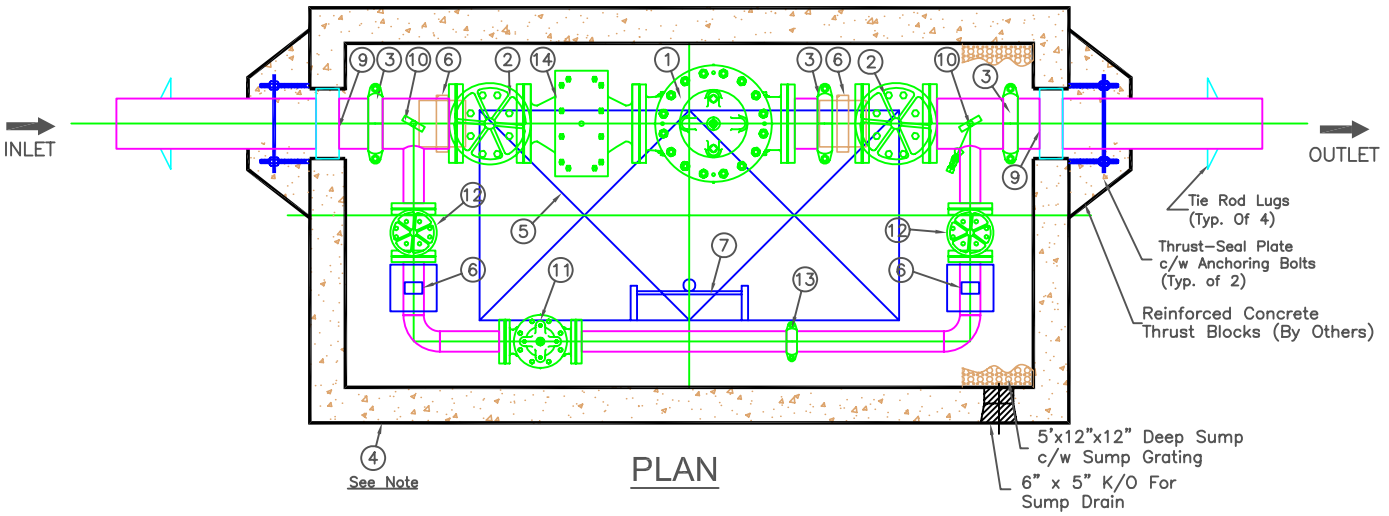

PLAN

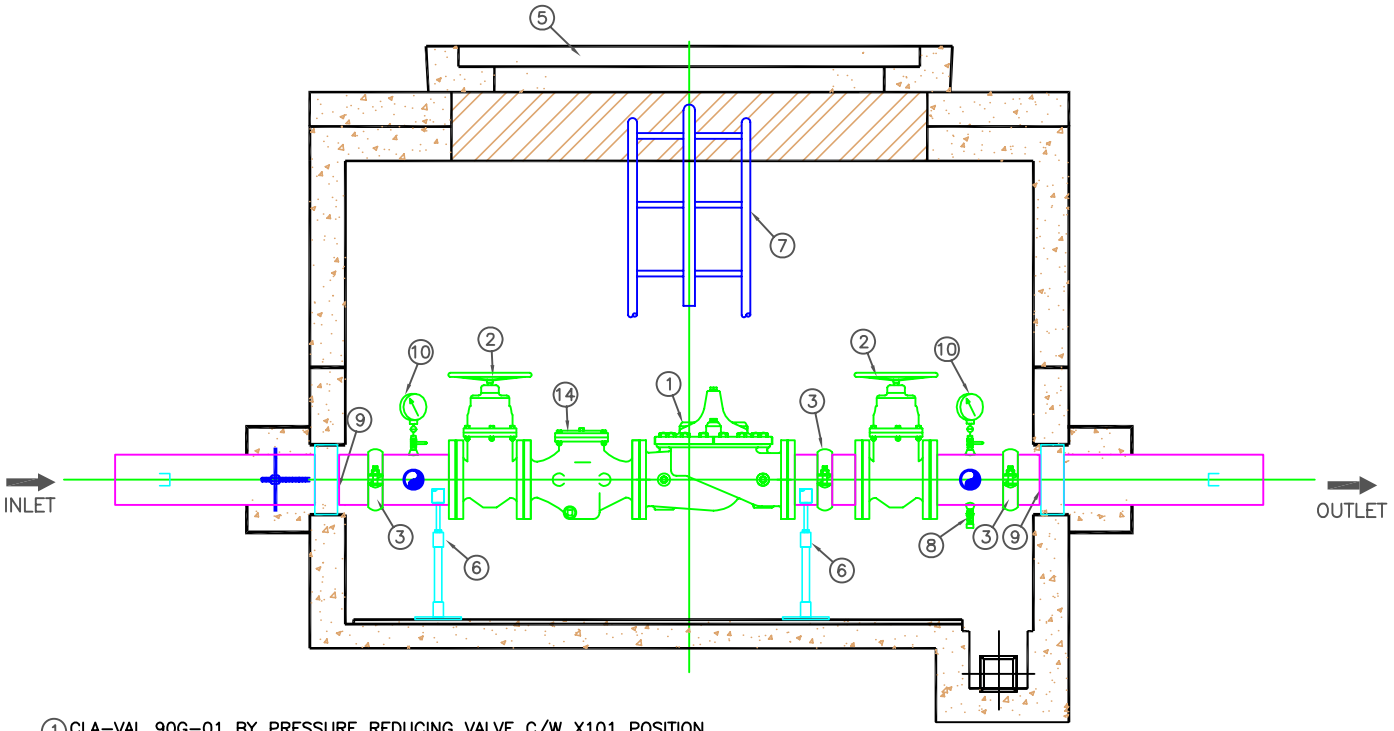

1. CLA-VAL 90G-01 BY PRESSURE REDUCING VALVE C/W X101 POSITION INDICATOR, DI BODY, BRONZE TRIM – #150 FLGD 30-300 PSI RANGE
2. CLOW WW25125 NRS RW GATE VALVE C/W HANDWHEEL – #150 FLGD
3. VICTAULIC #07 COUPLING
4. PRECAST CONCRETE CHAMBER C/W WHITE INTERIOR & BLACK EXTERIOR SEALANT
5. 36" X 72" ALUMIUM DOUBLE DOOR HATCH H20-44 CLASS B LOADING
6. ADJUSTABLE PIPE SUPPORTS
7. ALUMINUM LADDER WITH SAFETY POST
8. 3/4" HOSE BIB
9. PIPE SEAL ASSEMBLY
10. 4" (0-200PSI) PRESSURE GAUGE C/W ISOLATION VALVES
11. CLA-VAL 90G-01 ABS PRESSURE REDUCING VALVE C/W X101 POSITION INDICATOR, DI BODY, BRONZE TRIM – #150 FLGD 30-300PSI RANGE
12. CLOW WW2500 NRS RW GATE VALVE C/W HANDWHEEL – #130 FLGD
13. VICTAULIC #07 COUPLING
14. CLA VAL X43H STRAINER C/W BLOWDOWN

NOTES:

SIZING OF VAULT, PIPE & VALVES TO BE PROVIDED BY ENGINEER

STANDARD FABRICATION & FINISHING SPECIFICATIONS

FABRICATED STEEL PIPE & FITTINGS TO BE SCHEDULE NO. 40 STEEL PIPE FOR SIZES TO 10", AND 3/8" WALL FOR 12" AND LARGER.

ALL 2" AND SMALLER PIPE TO BE THREADED BRASS. ALL 3" AND LARGER PIPE, INSIDE WETTER SURFACES TO BE SANDBLASTED, EPOXY LINED AND COATED TO AWWA C-210 AND NSF-61 SPECIFICATION. FINISH COATING WILL BE BLUE ENAMEL.

CITY OF POULSBO DEPARTMENT OF PUBLIC WORKS	STANDARD PRESSURE REDUCING STATION DETAIL (NTS)	Detail 4-12 Approval Date: 02-13-07

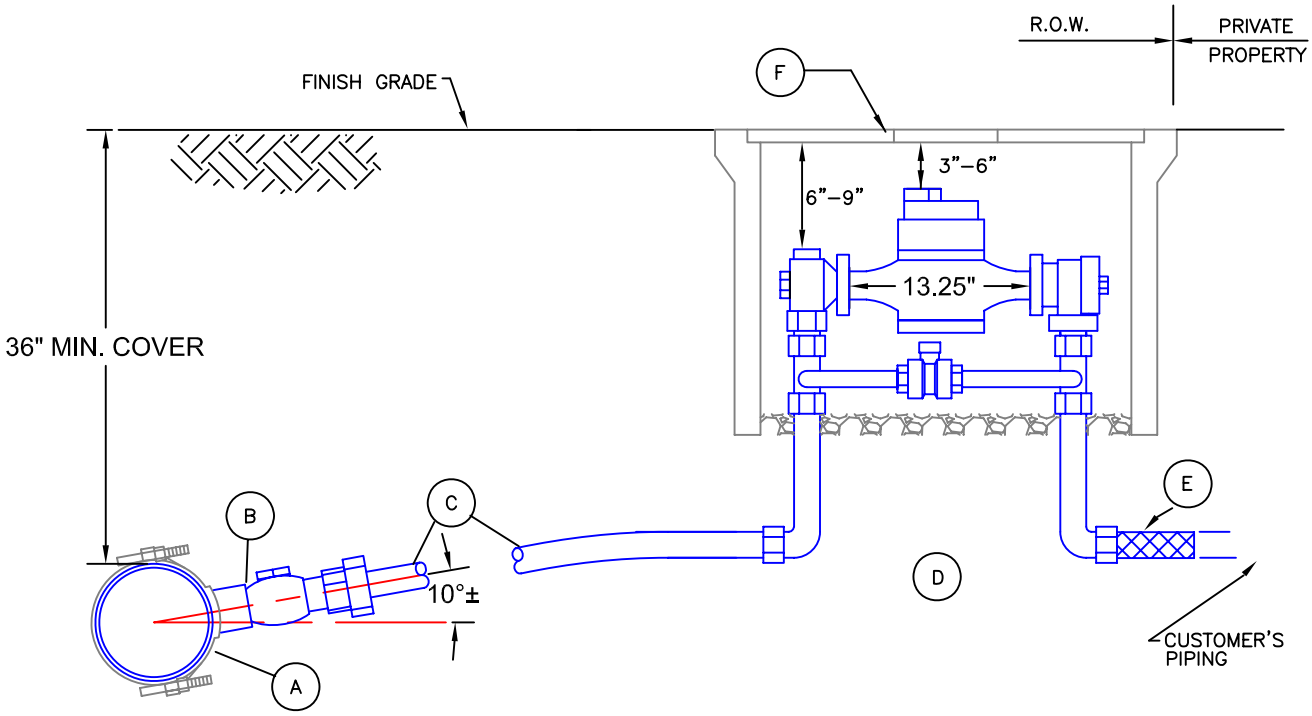

HORIZONTAL METER SETTER INSTALLATION

(A) DUCTILE IRON SERVICE SADDLE WITH IP THREAD AND DOUBLE STAINLESS STRAPS

(B) CORPORATION STOP, IP X IP

(C) 200 PSI HIGH DENSITY POLYETHELENE I.P.S. WITH BRASS COMPRESSION COUPLINGS WITH STIFFENERS

(D) 1–1/2" OR 2" LOCKABLE METER SETTER WITH LOCKABLE HIGH BY–PASS OPTION & CHECK VALVE

(E) 12" X 1–1/2" OR 2" BRASS NIPPLE

(F) FOGTITE #2 CONCRETE METER BOX, STEEL TRAFFIC LID WITH 1 1/2" LID HOLE FOR TOUCH–READ PAD

NOTES

SERVICE LINES SHALL BE PERPENDICULAR TO THE WATERMAIN, UNLESS OTHERWISE APPROVED BY THE ENGINEER.

AN APPROVED BACKFLOW ASSEMBLY MUST BE INSTALLED PER D.S.H.S. REQUIREMENTS. IRRIGATION SYSTEM SHALL NOT BE PUT INTO SERVICE UNTIL THE BACKFLOW ASSEMBLY INSTALLATION IS APPROVED BY A CITY OF POULSBO INSPECTOR.

METER WILL BE SUPPLIED AND INSTALLED BY THE CITY OF POULSBO UTILITY DEPARTMENT

LOCATE WIRE SHALL BE 14 GAUGE VINYL COATED COPPER WIRE PLACED WITH POLYETHYLENE SERVICE LINE. BARE LOCATE WIRE (STRIPPED) SHALL BE WRAPPED AROUND THE CORPORATION STOP A MINIMUM OF TWO TIMES. THE END IN THE METER BOX SHALL BE LOOPED WITHIN THE METER BOX.

CITY OF POULSBO DEPARTMENT OF PUBLIC WORKS	TYPICAL WATER SERVICE 1–1/2" OR 2" DOMESTIC OR IRRIGATION WATER SERVICE WITH HIGH BYPASS (NTS)	Detail 4–13 Approval Date: 02–13–07

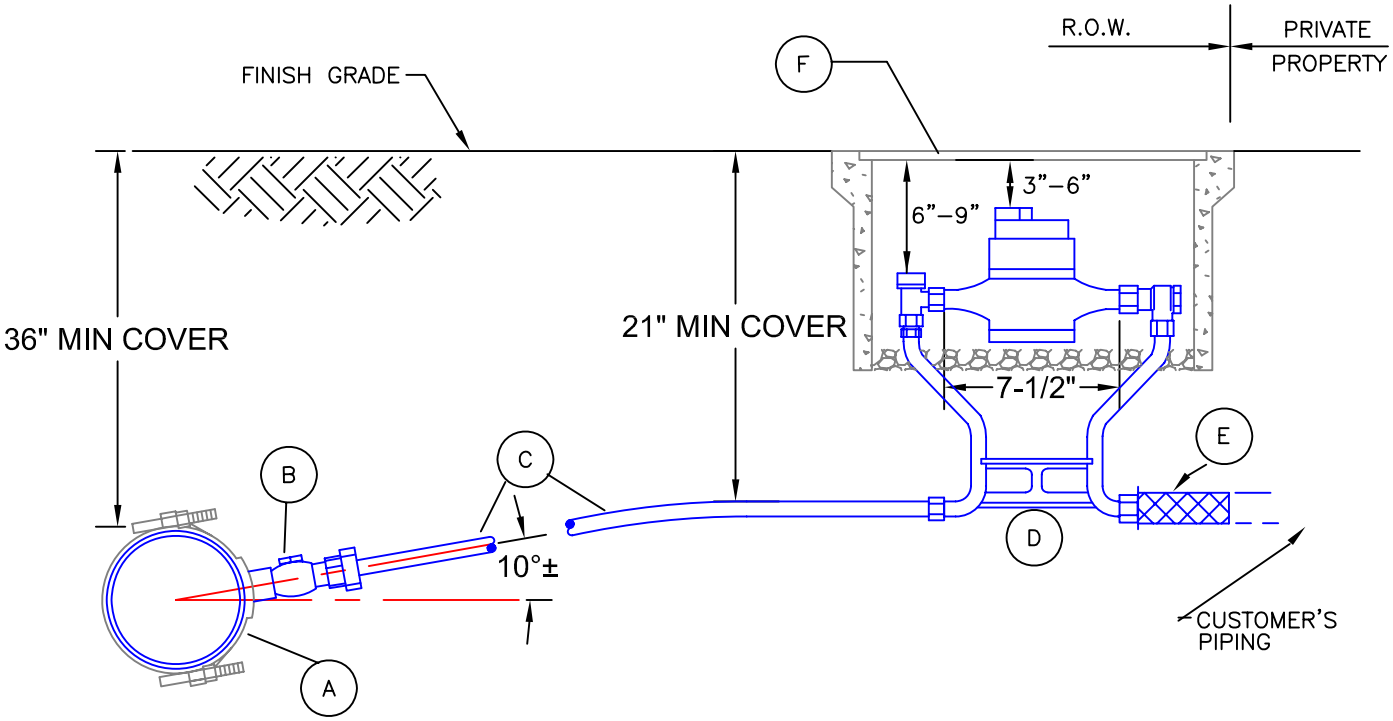

HORIZONTAL METER INSTALLATION

(A) DUCTILE IRON SERVICE SADDLE W/ DOUBLE S.S. STRAPS & IP THREADS

(B) 1" CORPORATION STOP IP X IP

(C) 1" I.P.S., 200 PSI HIGH DENSITY POLYETHELENE W/ LOCATE WIRE.

(D) METER SETTER W/ ANGLE STOP & CHECK VALVE

(E) 12" BRASS NIPPLE

(F) FOR 3/4" METER: FOGTITE B9 CONCRETE METER BOX
FOR 1" METER: FOTGITE B9–1/2 CONCRETE METER BOX
ALL BOXES: STEEL TRAFFIC LID WITH A 1–1/2" LID HOLE FOR TOUCH–READ PAD

NOTES

SERVICE LINES SHALL BE PERPENDICULAR TO THE WATERMAIN, UNLESS OTHERWISE APPROVED BY THE ENGINEER.

FOR IRRIGATION AND COMMERCIAL SERVICES AN APPROVED BACKFLOW ASSEMBLY MUST BE INSTALLED WITHIN 18" OF METER PER CITY OF POULSBO REQUIREMENTS. IRRIGATION SYSTEM SHALL NOT BE PUT INTO SERVICE UNTIL THE BACKFLOW PREVENTION INSTALLATION IS APPROVED BY A CITY OF POULSBO INSPECTOR.

LOCATE WIRE SHALL BE 14 GAUGE, VINYL COATED COPPER, PLACED WITH POLYETHELENE SERVICE LINE. BARE LOCATE WIRE (STRIPPED) SHALL BE WRAPPED AROUND THE CORPORATION STOP A MINIMUM OF TWO TIMES. THE END IN THE METER BOX SHALL BE LOOPED WITHIN THE METER BOX.

CITY OF POULSBO DEPARTMENT OF PUBLIC WORKS	TYPICAL WATER SERVICE 5/8" X 3/4" OR 1" DOMESTIC OR IRRIGATION WATER SERVICE (NTS)	Detail 4–14 Approval Date: 02–13–07

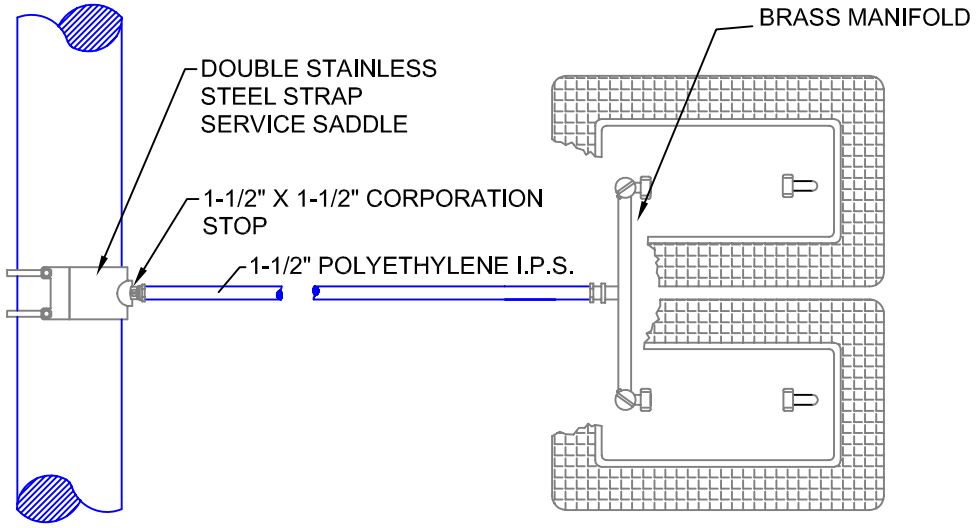

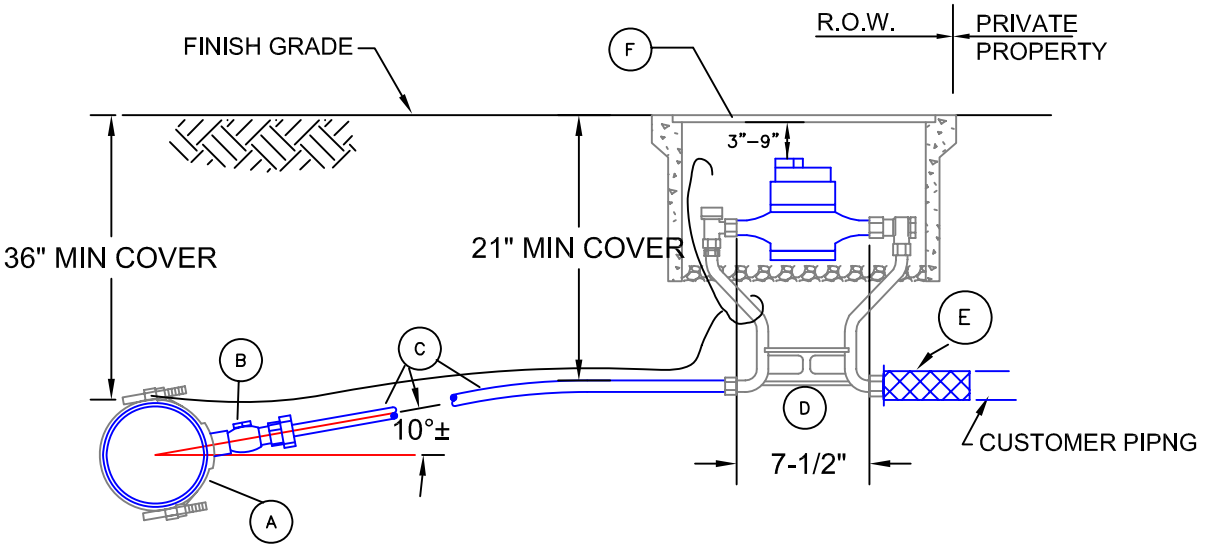

HORIZONTAL METER INSTALLATION

(A) D.I. & C.I.–DI SADDLE W/ S.S. STRAPS & IP THREADS

(B) 1 1/2" CORPORATION STOP IP X IP

(C) 1 1/2" 200 PSI POLYETHELENE I.P.S. W/ LOCATE WIRE (14 GAUGE VINYL COATED COPPER) & BRASS COMPRESSION COUPLINGS WITH STIFFENERS.

(D) 12" METER SETTER W/ LOCKABLE ANGLE STOP & CHECK VALVE

(E) 12" BRASS NIPPLE

(F) CONCRETE METER BOX, FOGTITE #B9.5 OR HIGH DENSITY PLASTIC WITH TRAFFIC LID. TOUCH READ LID

CITY OF POULSBO DEPARTMENT OF PUBLIC WORKS	DOUBLE SERVICE CONNECTION 3/4" & 1" DIAMETER	Detail 4–15 Approval Date: 02–13–07

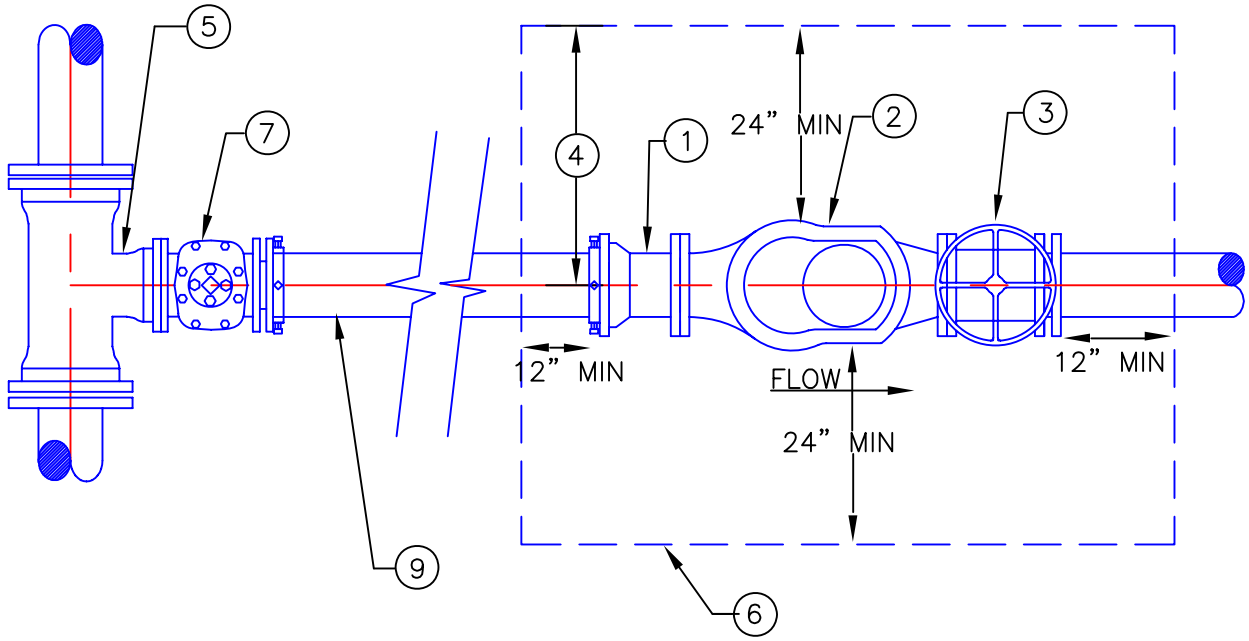

GENERAL NOTES

1. ADAPTER MJxFL DI W/MEGA-LUG
2. SENSUS COMPOUND METER
3. GATE VALVE- FL X MJ R/S WITH HAND WHEEL
4. CENTER INSTALLATION IN VAULT
5. MAINLINE TEE AND VALVE
6. CONCRETE VAULT WITH BOTTOM-SIZE AS REQUIRED
7. GATE VALVE
8. PLACE VALVE SUPPORTS UNDER VALVES INSTALLED IN VAULT
9. DUCTILE IRON PIPING
10. INSTALL 3'x3' SPRING-LOADED LID. CENTER OVER METER
11. MIN 12" BETWEEEN BOTTOM OF PIPE & FLOOR OF VAULT
12. WATER METER - (3" TO 10") TYPE AND SIZE AS REQUIRED (SUPPLIED BY THE CONTRACTOR) CUBIC FEET READING
13. MUST HAVE GRAVITY DRAIN TO DAYLIGHT

CITY OF POULSBO DEPARTMENT OF PUBLIC WORKS	TYPICAL COMPOUND WATER METER INSTALLATION 3" TO 10" (NTS)	Detail 4-16 Approval Date: 02-13-07

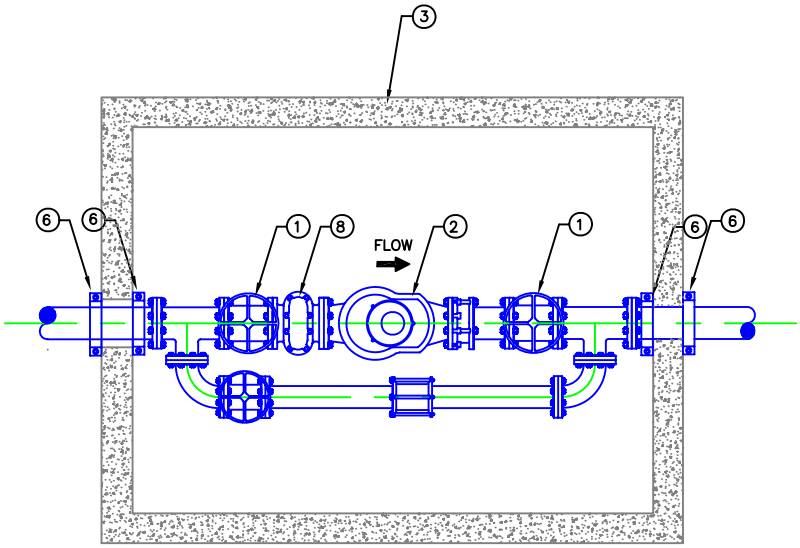

PLAN

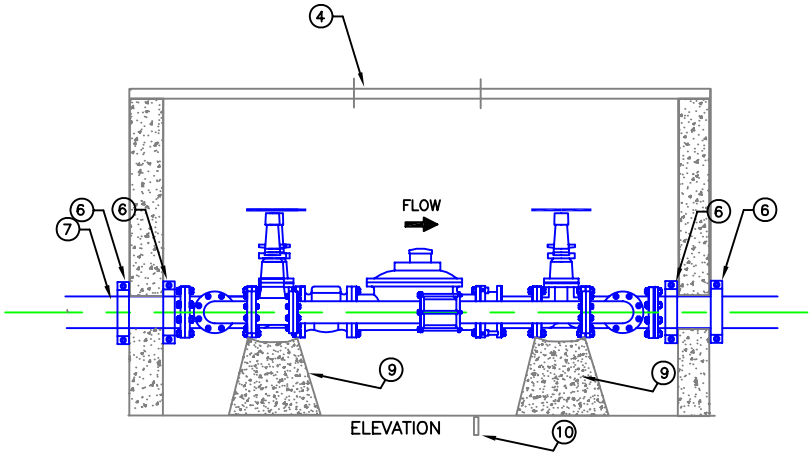

ELEVATION

NOTES

1. 2 GATE VALVES– MJ X FL
   (OS&Y VALVES FOR FIRELINE USAGE)
2. WATER METER–(3" TO 10") TYPE AND SIZE AS REQUIRED
   (SUPPLIED BY THE CONTRACTOR) CUBIC FEET
   READING
3. PRECAST CONCRETE VAULT (SIZE AS REQUIRED)
4. 3'X3' SPRING–LOADED LID (SUPPLIED BY THE CONTRACTOR)
   MARKED " WATER" ON LID
5. FOR BYPASS: 2 SERVICE SADDLES AND 1" CORPORATIONS (3" METER ONLY)
   OR 2" (OPTIONAL OR PERMANENT) BYPASS (OVER 3" METERS)
   CONSISTING OF
   - 2–2" TAPPING SADDLES
   - 2–2" GATE VALVES FL X FL
   - 2" GALV. PIPING (AS REQUIRED)
6. VALVES TO BE RESTRAINED WITH MEGA–LUGS AT INSIDE
   & OUTSIDE OF VAULT WALL AT BOTH ENDS.
7. PIPING–4" MIN. D.I. PIPE
   (FOR 3" METERS, REDUCE DOWN FROM 4")
8. STRAINER (REQUIRED)
9. PERMANENT SUPPORTS UNDER EACH VALVE WITH PIPE JACKS
   WITH SADDLE OR CRADLE
10. MUST HAVE GRAVITY DRAIN TO DAYLIGHT
11. ALL JOINTS WITHIN VAULT SHALL BE RESTRAINED WITH
    MEGA–LUGS OR FLANGED FITTING

CITY OF POULSBO DEPARTMENT OF PUBLIC WORKS	TYPICAL COMPOUND WATER METER 3" TO 10" WITH BYPASS (NTS, ANNOTATED)	Detail 4–17 Approval Date: 02–13–07

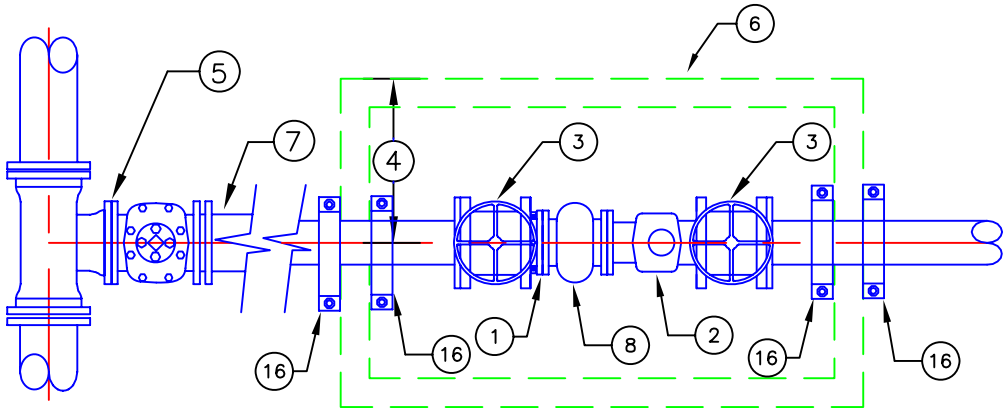

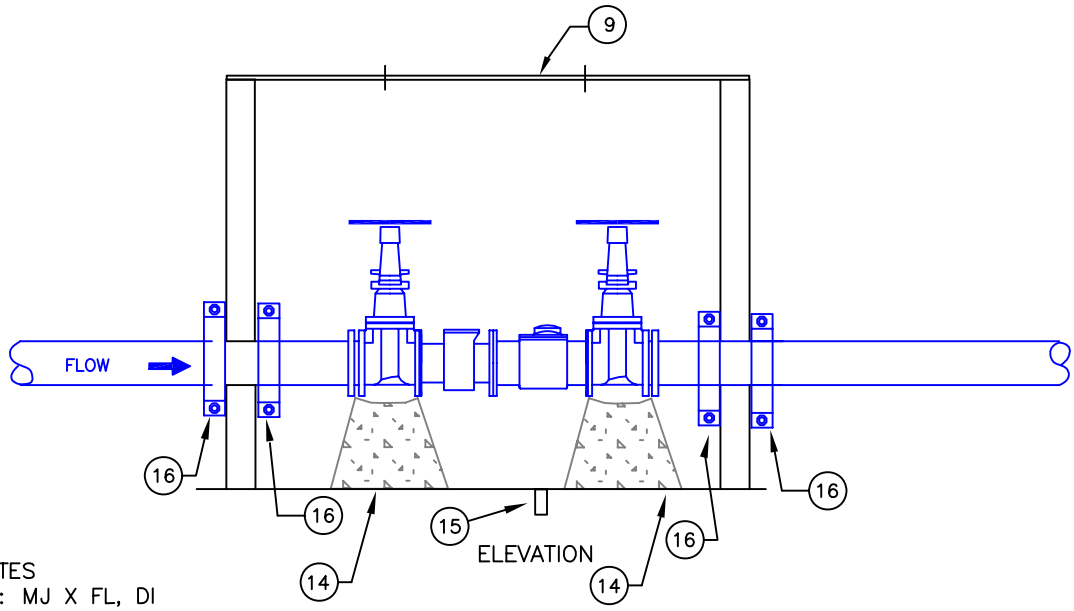

GENERAL NOTES

1. ADAPTER: MJ X FL, DI
2. SENSUS TURBINE METER WITH INTEGRATED STRAINER–SIZE AS REQUIRED.
   A MINIMUM OF 5 PIPE DIAMETERS OF STRAIGHT RUN OF PIPE IS REQUIRED UPSTREAM OF THE METER.
3. GATE VALVE– FL X MJ, R/S WITH HAND WHEEL.
4. CENTER METER INSTALLATION IN THE VAULT
5. MAINLINE TEE AND VALVE
6. CONCRETE VAULT–SIZE AS REQUIRED, INSTALLED WITH BOTTOM
7. DUCTILE IRON PIPING
8. STRAINER ATTACHED TO METER
9. INSTALL MH FRAME AND LID, CENTER OVER METER. IN TRAFFIC AREAS, C.I. LID LABELED "WATER".
   IN NON–TRAFFIC AREAS INSTALL 3X3 SPRING–LOADED LID.
10. DO NOT INSTALL CHECK VALVES AND PRESSURE REDUCING VALVES UPSTREAM OF THE METER.
11. EXTERNALLY WEIGHTED CHECK VALVES AND PRESSURE REDUCING DEVICES SHOULD NOT BE LOCATED CLOSER THAN 5 PIPE DIAMETERS DOWNSTREAM OF THE METER.
12. UNWEIGHTED CHECK VALVES SHOULD NOT BE LOCATED CLOSER THAN 3 PIPE DIAMETERS DOWNSTREAN OF THE METER.
13. VALVES IMMEDIATELY UPSTREAM OF THE METER SHOULD ONLY BE FULL–OPEN GATE VALVES.
14. PERMANENT SUPPORTS UNDER EACH VALVE WITH PIPE JACKS WITH SADDLE OR CRADLE
15. MUST HAVE GRAVITY DRAIN TO DAYLIGHT
16. VALVES TO BE RESTRAINED WITH MEGA–LUGS AT INSIDE & OUTSIDE OF VAULT WALL AT BOTH ENDS.
17. ALL JOINTS WITHIN VAULT SHALL BE RESTRAINED WITH MEGA–LUGS OR FLANGED FITTINGS.

CITY OF POULSBO DEPARTMENT OF PUBLIC WORKS	TYPICAL TURBINE WATER METER INSTALLATION 3" TO 10"	Detail 4–18 Approval Date: 02–13–07

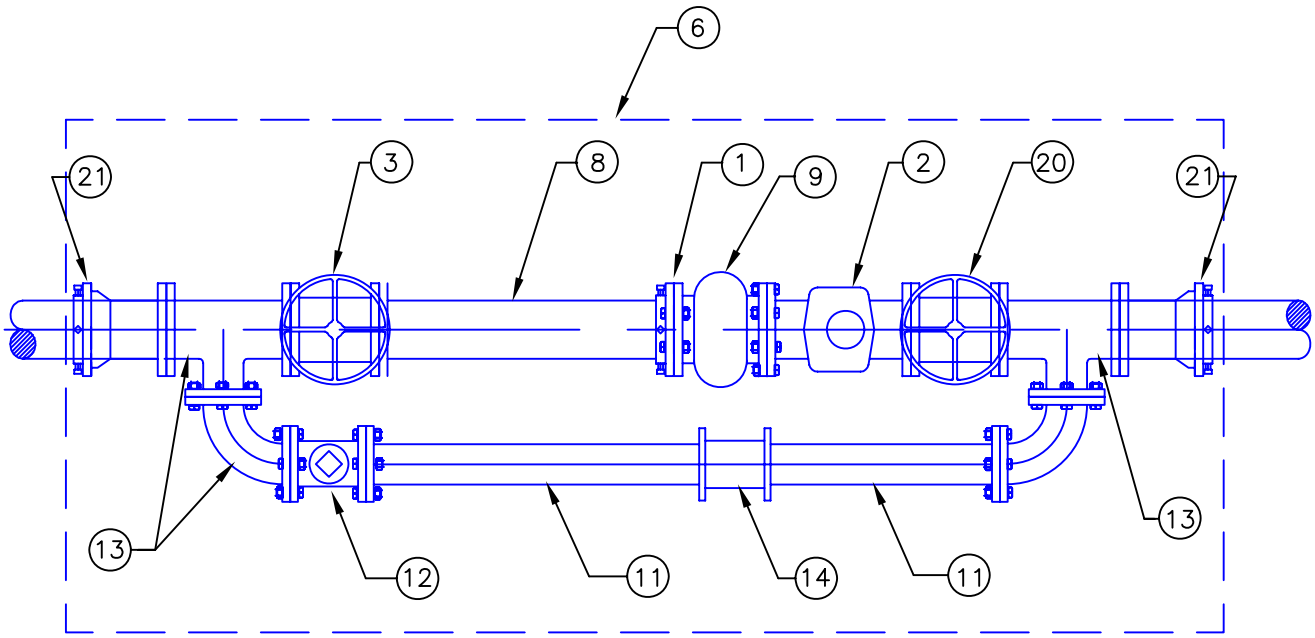

GENERAL NOTES

1. ADAPTER, SIZE AS REQUIRED, MJ X FL.
2. SENSUS TURBINE METER WITH INTEGRATED STRAINER–SIZE AS REQUIRED.
3. GATE VALVE–FL X MJ, MEGALUG W/ HANDWHEEL.
4. CENTER METER INSTALLATION IN THE VAULT.
5. MAINLINE TEE AND VALVE
6. CONCRETE VAULT–SIZE AS REQUIRED, INSTALLED WITH BOTTOM
7. PLACE PERMANENT SUPPORTS UNDER EACH VALVE WITH PIPE JACKS WITH SADDLE OR CRADLE
8. DUCTILE IRON PIPING
9. STRAINER FL X FL, OR ATTACHED TO METER.
10. INSTALL MH FRAME AND LID, CENTER OVER METER. IN TRAFFIC AREAS, C.I. LID LABELED "WATER". IN NON–TRAFFIC AREAS INSTALL 3X3 SPRING–LOADED LID.
11. BYPASS PIPING (SIZE PER SENSUS RECOMMENDATIONS)
12. BYPASS GATE VALVE
13. BYPASS 90° BENDS AND TEES (MAINLINE SIZE X BYPASS SIZE) FL X FL.
14. BYPASS COUPLING
15. A MINIMUM OF 5 PIPE DIAMETERS OF STRAIGHT RUN OF PIPE IS REQUIRED UPSTREAM OF THE METER.
16. DO NOT INSTALL CHECK VALVES AND PRESSURE REDUCING DEVICES UPSTREAM OF THE METER.
17. EXTERNALLY WEIGHTED CHECK VALVES AND PRESSURE REDUCING DEVICES SHOULD NOT BE LOCATED CLOSER THAN 5 PIPE DIAMETERS DOWNSTREAM OF THE METER.
18. UNWEIGHTED CHECK VALVES SHOULD NOT BE LOCATED CLOSER THAN 3 PIPE DIAMETERS DOWNSTREAM OF THE METER.
19. VALVES IMMEDIATELY UPSTREAM OF THE METER SHOULD ONLY BE FULL–OPEN GATE VALVES.
20. GATE VALVE, FL X FL W/ HANDWHEEL.
21. ADAPTER SIZE AS REQUIRED, MJ X FL W/ MEGALUG.
22. VALVES TO BE RESTRAINED WITH MEGA–LUGS AT INSIDE & OUTSIDE OF VAULT WALL AT BOTH ENDS.
23. ALL JOINTS WITHIN VAULT SHALL BE RESTRAINED WITH MEGA–LUGS OR FLANGED FITTINGS.

CITY OF POULSBO DEPARTMENT OF PUBLIC WORKS	TYPICAL TURBINE METER WITH BYPASS	Detail 4–19 Approval Date: 02–13–07

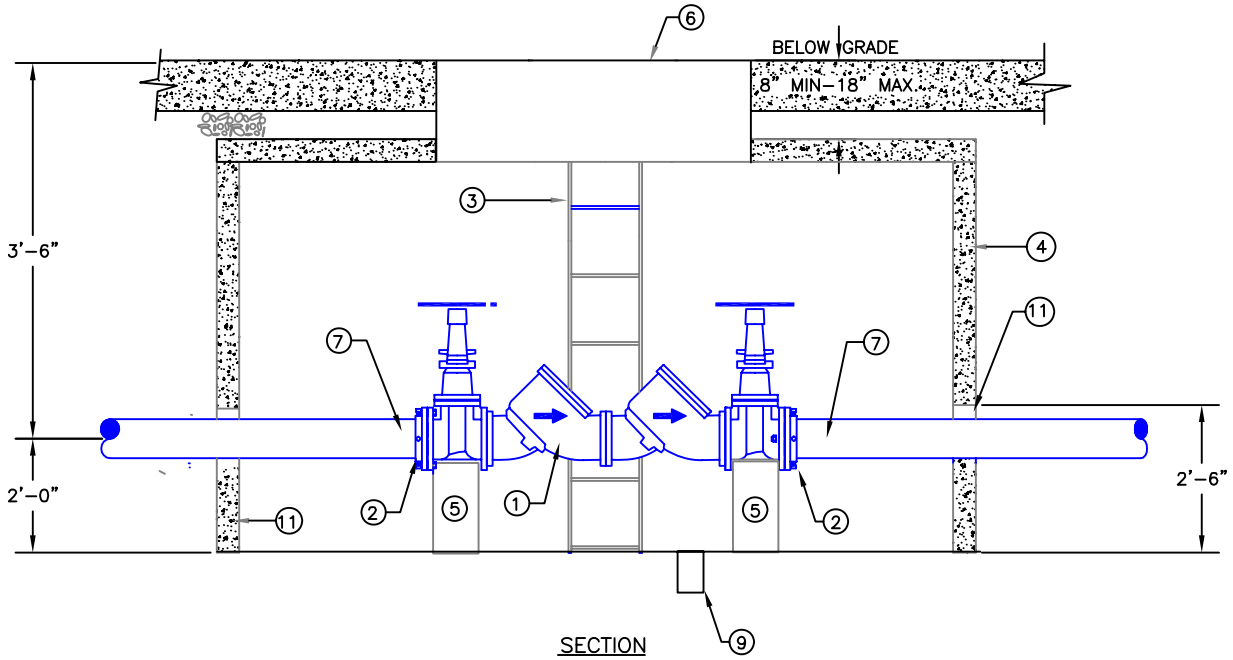

SECTION

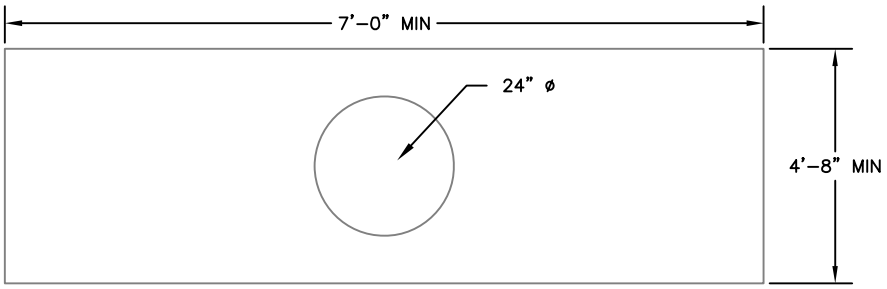

PLAN

GENERAL NOTES

1. DOUBLE CHECK VALVE ASSEMBLY, COMPLETE WITH 2 RESILIENT SEATED OS&Y VALVES AND 4 RESILIENT SEATED TEST COCKS AND BRASS OR COPPER DETECTOR BY–PASS.
2. UNIFLANGED ADAPTER (6X4 REDUCER WHERE NECESSARY, SEE PLAN).
3. ONE GALVANIZED STEEL LADDER TO BE SECURED TO VAULT.
4. CONCRETE UTILITY VAULT SIMILIAR TO UTILITY VAULT CO. MODEL #575–LA.
5. CONCRETE VALVE SUPPORTS – PERMANENT SUPPORTS UNDER EACH VALVE WITH PIPE JACKS WITH SADDLE OR CRADLE
6. LID SHOULD BE FULL SIZE 3 X 3 DOUBLE DOOR ALUMINUM. IN SIDEWALKS, A FIBERGLASS "SLIP–NOT" LID IS REQUIRED
7. CL 52 D.I. PIPE
8. ALL JOINTS WITHIN VALULT SHALL BE RESTRAINED WITH MEGA–LUGS OR FLANGED FITTINGS.
9. MUST HAVE GRAVITY DRAIN TO DAYLIGHT
10. VALVES TO BE RESTRAINED WITH MEGA–LUGS AT INSIDE & OUTSIDE OF VAULT WALL AT BOTH ENDS
11. OPENING SAME AS PIPE SIZE W/FULL RADIUS.GROUT & SEAL AROUND PIPE ONCE VAULT IS SET.

CITY OF POULSBO DEPARTMENT OF PUBLIC WORKS	DOUBLE CHECK VALVE ASSEMBLY (FOR FIRELINES, NTS)	Detail 4–20	
		Approval Date: 02–13–07	

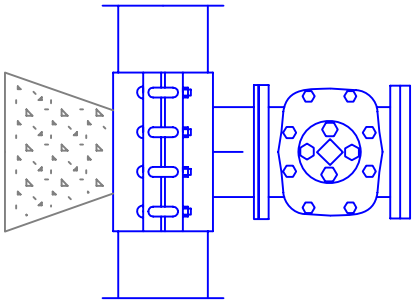

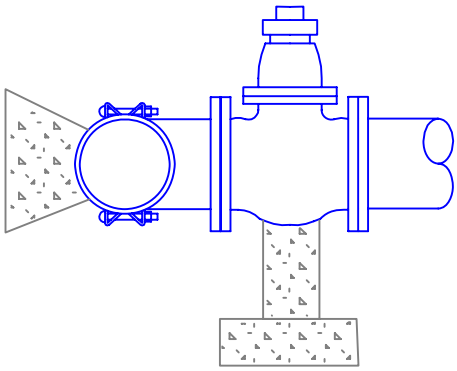

STAINLESS STEEL TAPPING TEE

NOTES

1. STAINLESS STEEL TAPPING SLEEVES SHALL HAVE FULL CIRCLE SEAL.
2. ALL TEES AND VALVES TO BE WATER TESTED BEFORE TAP.
3. SIZE ON SIZE TAPS REQUIRE 30" SLEEVE
4. TAPPING SLEEVE SHALL BE ROMAC SST, 20" MIN, OR EQUIVALENT

CITY OF POULSBO DEPARTMENT OF PUBLIC WORKS	STAINLESS STEEL TAPPING TEE (NTS)	Detail 4-21 Approval Date: 02-13-07

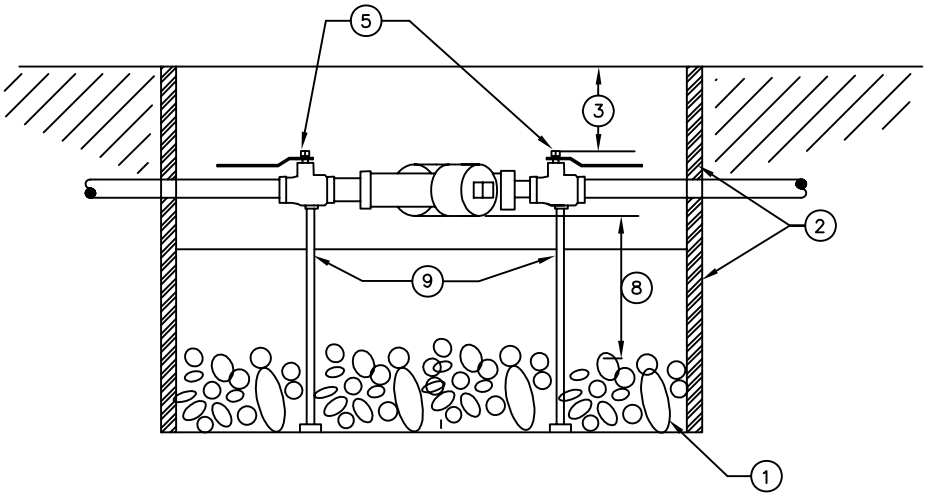

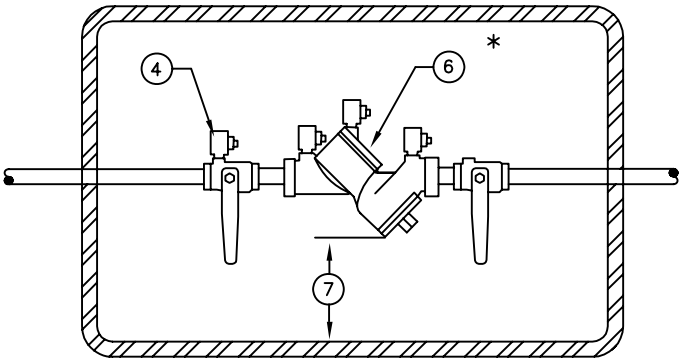

*INSTALL ACCORDING TO MANUFACTURER'S SPECIFICATIONS

NOTES

1 PEA GRAVEL BY 6" DEEP ON BOTTOM OF BOX OF
2 ENCLOSE 2" & SMALLER D.C.V.A. IN 2 METER BOXES STACKED ON TOP OF EACH OTHER OR , OVERSIZED BOX WHEN NEEDED. MUST HAVE A REMOVABLE COVER
3 MIN. OF 3" DISTANCE BETWEEN UNDERSIDE OF LID AND HIGHEST POINT OF DEVICE.
4 MUST INCLUDE (4) RESILIENT SEATED TEST-COCKS WITH PLUGS INSTALLED.
5 THE D.C.V.A. MUST INCLUDE (2) RESILIENT SEATED SHUT OFF VALVES.
6 Y-PATTERN D.C.V.A. SHOULD BE INSTALLED ON SIDE.
7 WHEN TEST COCKS ARE FACING SIDEWAYS THERE MUST BE A 6" MIN CLEARANCE BETWEEN THEM AND SIDE OF BOX.
8 MIN OF 3" BETWEEN LOWEST POINT OF DEVICE AND DRAIN ROCK.
9 PROVIDE SUPPORT FOR 2" DEVICES.
10 TEST BEFORE USE AND SEND REPORT TO POUSLSBO WATER UTILITY FOR APPROVAL.

CITY OF POULSBO DEPARTMENT OF PUBLIC WORKS	3/4"-2" OUTSIDE INSTALLED IRRIGATION OR FIRE SPRINKLER DOUBLE CHECK VALVE ASSEMBLY	Detail 4-22 Approval Date: 02-13-07

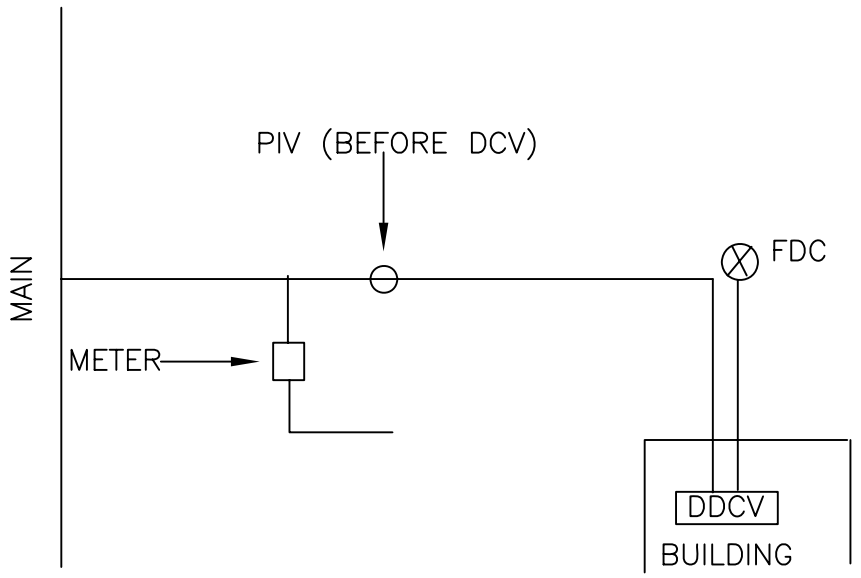

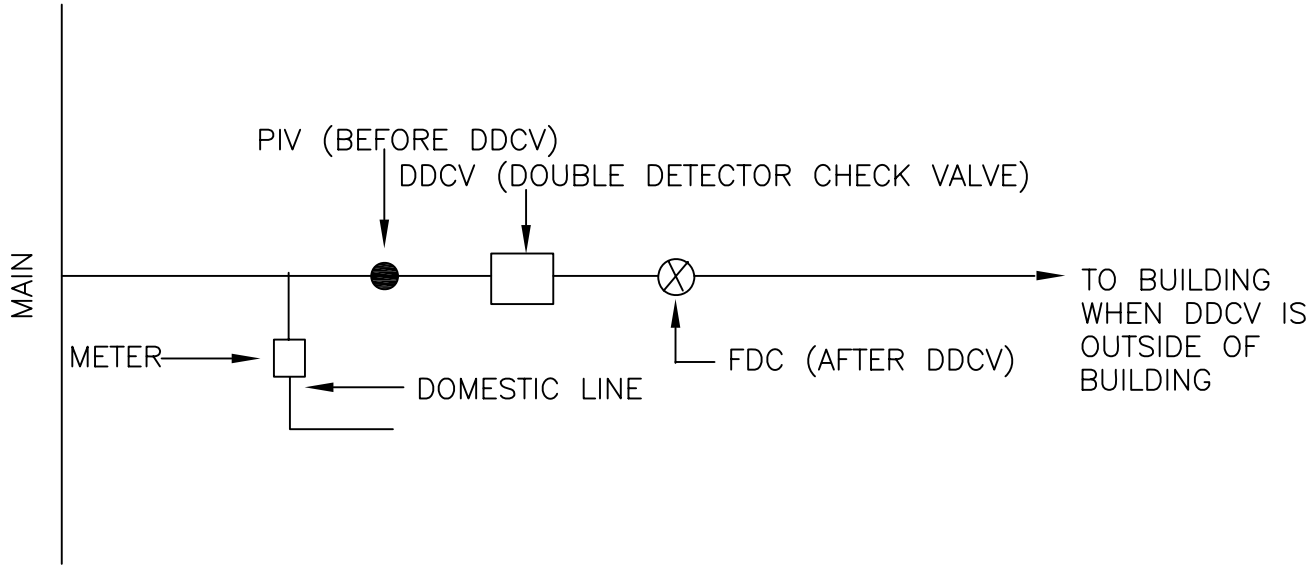

NOTES

1. FDC (FIRE DEPARTMENT CONNECTION) MUST BE <50' FROM HYDRANT. PREFERRED TO HAVE PIV (POST INDICATOR VALVE) IN SAME VICINITY.
2. CITY OWNS UP TO & INCLUDING PIV.
3. CITY OWNS UP TO & INCLUDING DOMESTIC METER.
4. THESE DRAWINGS ARE SCHEMATIC ONLY TO SHOW THE RELATIONSHIP OF THE PIV, DDCV, & FDC. THE PIV IS INSTALLED BETWEEN THE MAIN & DDCV. THE FDC IS INSTALLED "BEHIND" OR "AFTER" DDCV.

CITY OF POULSBO DEPARTMENT OF PUBLIC WORKS	SCHEMATIC LAYOUT FOR PIV & FDC	Detail 4-23 Approval Date: 02-13-07

Water	Section 4

General.
Plans for the existing water system are maintained in digital and printed form by the City. Copies may be obtained from the Utility Division of the Public Works Department.

Future expansion of the water system is planned by the City and maintained in the "Comprehensive Plan Update, Water System", available from the Planning Department.

Every subdivision, including long plats and short plats, and all other land use developments, shall be provided with a complete water system connected to the existing City system, conforming to the Comprehensive Water Plan.

All design, materials, and work (methods) shall conform to the following list. *All design, materials, and methods not specifically referenced in these City standards and specifications shall comply with applicable sections of ASTM, AWWA, and APWA/WSDOT Standard Specifications.* In the case of differences among the standards and specifications, the most restrictive standards shall apply unless directed otherwise by the Public Works Director. The Public Works Director retains the authority to modify, revise, or deviate from the approved plans at his discretion. Approval of the plans does not warrant the accuracy of the plans.

a. The latest edition of the City of Poulsbo Construction Standards and Specifications adopted by the City of Poulsbo, and subsequent revisions;
b. The latest edition of "Standard Specifications for Road, Bridge, and Municipal Construction" and "Standard Plans For Road, Bridge and Municipal Construction" prepared by the Washington State Chapter American Public Works Association (APWA) and the Washington State Department of Transportation (WSDOT), and subsequent revisions;

A. Planning Criteria

1. Design and construction of water mains shall provide for the extension of mains across property frontages and within the site to adjacent properties, when appropriate, for the ultimate development of tributary areas, as determined by the Public Works Director. All water systems shall be publicly owned up to, and through, the water meter. For fire mains, the City shall own up to and including the Post Indicator Valve. All water mains and fire hydrants

shall be located in public right-of-way or easements granted to the City of Poulsbo.

B. General Design and Drawing Standards

Design.

1. Water system extensions shall be designed to be compatible with the applicable pressure zone.

2. Provide temporary 2" blow off assemblies for testing and disinfection of new water mains (where hydrants are not available).

3. Cap end of existing water lines to be abandoned with MJ cap and concrete blocking.

4. Systems shall be designed to promote and maintain water quality standards. New system extensions may require additional looping connections to interconnect mains.

5. All street ends with the possibility for extension must have utilities stubbed out of the paved area a minimum of six feet or as directed by the City Engineer.

Drawings

1. The drawings shall conform to the requirements listed in Section 1 of these standards and specifications under Drafting Requirements.

2. Each fitting/valve shall have attachment type listed (e.g. FL, MJ, FLxMJ, etc.)

3. Dimension existing and new main locations from right-of-way line, property line and/or centerline.

C. Mains

1. Minimum pipe size:
   a. 8" minimum when serving fire hydrants.
   b. 6" minimum may be used in localized conditions where fire hydrants are served by looped lines, subject to approval by the Public Works Director.
   c. 4" minimum shall be used beyond hydrants to serve water to end of cul-de-sac when no future extension is required.

2. 14-gauge locator wire shall be buried along the entire length of the pipe and shall be stripped and connected to a bolt on each gate valve, and be brought to the surface at each meter, gate valve, blow-off, and air vacuum valve. The wire at valve boxes shall be brought up the outside of the valve box and inserted through a hole drilled six (6) inches below the top of the

box. The inserted portion of the wire shall be formed into a six (6) inch diameter loop. All splices in the locator wire shall be made using split bolt connectors or with a double nut connection at a fitting.

3. Mains which could be extended in the future shall be terminated with an in-line valve and blow-off assembly.

D. Valves & Appurtenances

1. The maximum distance between valves on mains is 300 feet. Additional valves may be required at shorter distances for area isolation.

2. Provide a valve at both ends of an easement.

3. Valves shall be placed at all legs of water main intersections unless otherwise indicated by the Public Works Director.

4. Air/vacuum relief valves shall be installed at local high points of water mains.

5. Blow-off assemblies shall be installed at local low points in water main to allow for removal of sediments.

6. Blocking of valves, appurtenances, and fittings shall be per the standard details. The engineer of record shall determine if special blocking designs are necessary (e.g. due to soil conditions, conflicting utilities, etc.).

7. Valves at the end of mains shall be both blocked and tied back.

E. Fire Hydrants

1. Fire hydrants shall be located not more than 600 feet apart in single family residential areas. Additional hydrants may be required by the Fire Marshall when any building is in excess of 300 feet from a hydrant or when accessibility is determined to be limited. Fire hydrant distance to a building is measured by the lay of the fire hose.

2. For all building occupancies except single family and single story duplexes, hydrant spacing shall be at 300-foot intervals. Additional hydrants are required when the building to be protected is in excess of 150 feet from a hydrant or when determined to be necessary by the Fire Marshall.

3. Fire mains/hydrant runs over 50 feet in length must be 8" diameter.

4. Hydrants shall be located a minimum of 50 feet from any commercial building.

5. A valve shall be installed at the mainline tee.

6. The Fire Marshall or Public Works Director may require existing hydrants to be upgraded or replaced with new hydrants.

7. Three (3) feet minimum clearance shall be provided around hydrants in service. Guard posts may be required.

8. Fire hydrant assemblies shall be installed per the standard detail.

F. Fire Flow and Fire Protection Systems

Fire flow requirements shall be determined by the Fire Marshall. Fire protection sprinkler systems, including backflow prevention as required by the current WAC (Washington Administrative Code), are reviewed and approved by the Fire Marshall in association with the required Building Permit. For uses other than single-family applications, an FDC (Fire Department Connection) shall not be placed on the building but shall be constructed no closer than 10 feet nor farther than 100 feet from the building, unless required or approved otherwise by the Fire Marshall. The civil plans shall show the FDC, PIV (Post Indicator Valve) and DDCV (Double Detector Check Valve) in conformance with the standard detail.

G. Pipe Class / Cover / Protection

1. All water mains shall be Class 52 ductile iron pipe.

2. Water main depth of cover shall be 3 feet minimum and 6 feet maximum from final grade.

3. In certain applications, the Public Works Director may require the ductile iron pipe and adjacent fittings to be encased in 8-mil polyethylene per AWWA C-105.

H. Separation and Clearances with Other Utilities

1. <u>Water Services and Building Water Services</u>.
   a. A “water service” (or “lateral” or “service line”) is considered to be that portion of a water line that will be constructed between a water main and the property line or easement line of a residence or other building to which water is being provided.
   b. A “building water service” is considered to be that portion of a water line that will be constructed from the meter to the residence or building to which water is being provided.
   c. Water services and side sewers shall have at least 5 feet horizontal separation.

2. Check for crossing or parallel utilities. Maintain minimum vertical and horizontal clearances. Water mains and sewers should be separated as far as is reasonable is both the horizontal and vertical direction, with sewer mains always lower than water mains. Avoid crossing at highly acute angles (smallest angle measure between utilities should be between 45 and 90 degrees). Refer to Section 3(F), Sanitary Sewer, for specific requirements.

3. At points where thrust blocking is required, minimum clearance between the concrete blocking and other buried utilities or structures shall be 5 feet.

4. Horizontal and vertical clearances from water mains shall be:

Utility	Horizontal (ft)	Vertical (ft)
Cable	5	1
Gas	5	1
Power	5	1
Telephone	5	1
Storm	5	1
Sewer	10	1.5

I. Bends

Vertical bends shall be used when joint deflection exceeds the manufacturer's recommendations.

J. Slopes

Pipe joints shall be restrained where slopes are 20% or greater. Joint restraint on slopes shall be Megalug™, or equal, restrainer for mechanical joints and restraint joints for ductile iron push-on joints. Anchor blocks shall be used in conjunction with joint restraint where slopes are 25% or greater. Refer to the standard detail.

K. Tee Connections to the Existing System

1. Tee connections to existing mains shall be via a wet tap unless approved otherwise by the Public Works Director.

2. Wet taps shall be made by a qualified tapping service. Notice shall be given to the City inspector 24 hours in advance of the scheduled tap.

L. Services

1. Irrigation services may be tapped off the domestic service but require separate backflow prevention. Sewer billing is based on water

consumption. If metering is desired in order to reduce the sewer billing, a separate irrigation service tap and connection fee is required. Deduct meters are not allowed.

2. Individual pressure reducing valves are required on the customer side of service lines (after water meter box) when service pressures exceed 80 psi. The plans shall identify lots/buildings where individual pressure reducing valves are required.

3. All service lines between the main and the meter shall have 14-gauge locator wire placed along the top of the pipe for the entire length of the pipe.

4. Service taps shall be a minimum of 18 inches from the nearest edge of any fitting and a minimum of 12 inches from any other service tap.

M. Backflow Prevention

All commercial buildings shall have a Washington State approved double check valve assembly installed on the domestic water service and irrigation service. The check valve shall be located within eighteen (18) inches of the downstream side of the water meter. The device must be tested by a City-approved state-certified Backflow Assembly Tester (BAT) upon installation. Provide a copy of the test report to the Public Works Department and the Building Department. Assemblies installed outside of buildings shall be enclosed in an appropriate box or vault. In traffic areas, the box must be traffic rated. In non-traffic areas the box may be plastic.

N. Materials and Methods

1. General
   a. All materials and methods not specifically referenced in this manual shall comply with the applicable sections of the most currently adopted editions of the ASTM, AWWA, APWA, and APWA/WSDOT Standard Specifications. When there are differences between the specifications, the Public Works Director shall determine which shall apply.
   b. Where reference is made to other specifications, it shall be the latest revision at the time of construction, except as noted on the plans or herein.
   c. When specific manufacturers or models of various materials are listed, no substitutions will be allowed without prior approval by the Public Works Director.

2. Gate Valves
   a. All gate valves shall be epoxy-lined ductile iron, with a resilient seat, and conform to AWWA C515.

b. No butterfly valves are allowed unless approved by the Public Works Director.
c. In those installations where the operating nut is five (5) feet or more below the finished grade, the contractor shall extend the operating nut to not more than three (3) feet below the finished grade. Extensions are to be a minimum of 1 foot with only one extension per valve.
d. When a main is extended, the City does not guarantee the water tightness of existing valves at the connection point.

3. Tapping Valves and Tees
   a. Wet taps larger than 2 inches shall be made using an American Flow Control™ Series 2800 ductile iron tapping sleeve or Romac™, stainless steel tapping sleeve. The minimum length shall be 20 inches.
   b. Sleeves for size-on-size taps shall have a minimum length of 30 inches.
   c. Stainless steel tapping sleeves shall have a full circle seal.
   d. All tees and valves shall be water tested before tapping.

4. Service Taps
   a. Services shall be tapped before the main is disinfected and pressure tested.
   b. All taps shall utilize a tapping saddle. Direct taps are not allowed.

5. Fire Hydrants
   a. All fire hydrants shall be one of the following five types:
      i. M & H 929
      ii. Mueller Centurion
      iii. Waterous 5-1/4 Pacer
      iv. Clow F2500
      v. AVK Series 2780
   b. Hydrants shall be equipped with two (2) 2-1/2" hose nozzles, National Standard threads, with caps, chains, and one (1) pumper nozzle, City of Seattle threads, and a 5" Stortz 1/4 turn quick coupling fitting with a set screw, cap, and chain.
   c. The shoe connection shall be six -inch mechanical joint with lugs. The operating nut is one and one-quarter inch (1-1/4") pentagonal. Hydrants shall be as shown in the approved materials list, with no exceptions unless approved by the Public Works Director. All hydrants shall be of the "Traffic Model" type with approved break-away features and brass to brass sub-seat.
   d. Fire hydrants shall be painted with two (2) coats of Ace™ Safety Red paint for exterior metal. Hydrants shall be properly cleaned and prepared for repainting. Spray paint is not allowed.

6. Check Valves

a. Check valves shall be for 150 psi working pressure, unless otherwise specified. Valve shall have adjustable tension lever and spring to provide non-slamming action under all conditions unless otherwise specified.
b. For irrigation, a double check valve assembly (DCVA) shall be installed within 18” of the downstream side of the water meter. The device must be tested by a City-approved state-certified Backflow Assembly Tester (BAT) upon installation. Provide a copy of the test report to the Public Works Department and the Building Department. Assemblies installed outside of buildings shall be enclosed in an appropriate box or vault. In traffic areas, the box must be traffic rated. In non-traffic areas the box may be plastic.

7. Air and Vacuum Release Valve
   a. Combination air valves shall be of the single housing style that combines the operating features of both an Air/Vacuum and Air Release Valve.
   b. The air/vacuum portion shall automatically exhaust large quantities of air during the filling of the pipeline and automatically allow air to re-enter the pipeline when the internal pressure of the pipeline approaches a negative value due to column separation, draining of the pipeline, power outage, pipeline break, etc.
   c. The air release portion shall automatically release small pockets of air from the pipeline while the pipeline is in operation and under pressure.
   d. The combination air valve shall have 1" NPT inlet and outlet connections and a maximum working pressure of 300 psi.
   e. The valve body and cover shall be cast iron with stainless steel float. All combination air valves placed below ground level shall be vented to prevent cross connection potential.

8. Pressure Reducing Station
   a. Unless otherwise shown on the construction plans, a standard pressure reducing station shall have a 6" pressure reducing valve with flanged ends and a bypass with a 2" pressure reducing valve with threaded ends.
   b. Strainers shall be installed on the inlet side of each pressure reducing valve with a bronze ball valve or resilient seat gate valve with a hand wheel operator sized to correspond with the strainer blow-off outlet size. A 1-1/2" pressure relieve valve with threaded ends shall be installed on the discharge side of the 2" pressure reducing valve line and vented to atmosphere as shown on the plans.

9. Pressure Reducing Valve (PRV Station)
   The pressure reducing valve shall maintain a constant downstream pressure regardless of varying inlet pressure. The valve shall be a hydraulically operated diaphragm-actuated, globe valve. The pilot control

shall be a direct-acting, adjustable, spring loaded, normally open, diaphragm valve, designed to permit flow when controlled pressure is less than the spring setting. The control system shall include a fixed orifice.

10. Pressure Relief Valve (PRV Stations)
    The pressure relief valve shall maintain constant upstream pressure by passing or relieving excess pressure, and shall maintain close pressure limits without causing surges. The main valve shall be hydraulically operated, diaphragm-actuated, globe valve. The pilot control shall be a direct acting, adjustable, spring-loaded, diaphragm valve, designed to permit flow when controlling pressure exceeds spring setting. The pilot control system shall operate such that as excess line pressure is dissipated, the main valve shall gradually close to a positive, drip-tight seating.

11. Diaphragm-Actuated Valves
    All diaphragm-actuated valves shall contain a resilient, synthetic rubber disc, having a rectangular cross-section, contained on three and one-half sides by a disc retainer and forming a tight seal against a single removal seat insert. The diaphragm assembly containing a valve stem shall be fully guided at both ends by a bearing in the valve cover and an integral bearing in the valve seat. This diaphragm assembly shall be the only moving part and shall form a sealed chamber in the upper portion of the valve, separating operating pressure from line pressure. The diaphragm shall consist of nylon fabric bonded with synthetic rubber and shall not be used as a seating surface. Packing glands and/or stuffing boxes are not permitted and there shall be no pistons operating the valve or pilot controls. All necessary repairs shall be possible without removing valve from the line.

12. Strainers (PRV Stations)
    Strainers shall be ductile iron-bodied "Y" type equal in size to corresponding pressure reducing valve. Strainer shall feature bolted cover machined to hold screen securely in place and tapped F.I.P.T. for blow-off outlet. Screen shall be constructed from perforated stainless steel. Wire mesh screens will not be allowed. Main-line strainer shall have flanged-ends and bypass strainer shall have threaded ends.

13. Vaults (PRV Stations)
    The vault shall be equal to Utility Vault Company Model 687-LA with full size dual hatch cover. Vault exterior shall be coated with coal tar enamel or equal and shall be equipped with a ladder access.

14. Corporation Stop
    a. Corporation stops shall be brass in accordance with AWWA Standard C800 with iron pipe size inlet and outlet.

b. Corporation stops for 1" tap shall be either the plug-type or ball valve type. Corporation stops for 1 1/2" and 2" tap shall be ball valve type.
c. For poly pipe, the corporation stop shall be with AWWA iron pipe (IP) inlet by iron pipe (IP) outlet. All joints with poly pipe shall be made utilizing stainless steel inserts along with couplings and adapters.

15. Reduced Pressure Backflow Assembly
All reduced pressure backflow assemblies shall be the one listed on the most current copy of "Accepted Cross-Connection Control Assemblies" published by Washington State Department of Health. The assembly shall include a tightly closing resilient seated shut-off valve on each end of the body and each assembly shall be fitted with four properly located resilient seated test cocks.

16. Reduced Pressure Backflow Assembly (RPBA) With Detector
This assembly shall include a line-sized Department of Health-approved (listed on the most current copy of "Accepted Cross-Connection Control Assemblies" published by Washington D.S.H.S.) Reduced Pressure Backflow Assembly with a parallel 3/4" meter and 3/4" Department of Health-approved Reduced Pressure Backflow Assembly. Each assembly shall include a tightly closing resilient seated shut-off valve on each end of the body and each assembly shall be fitted with four properly located resilient seated test cocks.

17. Double Check Valve Assembly (DCVA)
All double check valve assemblies shall be the one listed on the most current copy of "Accepted Cross-Connection Control Assemblies" published by the Washington State Department of Health. The assembly shall include a tightly closing resilient seated shut-off valve on each side of the body and each assembly shall be fitted with four properly located resilient seated test cocks.

18. Double Check Valve Assembly with Detector
This assembly shall include a line sized Department of Health-approved (listed on the most current copy of "Accepted Cross-Connection Control Assemblies" published by Washington State Department of Health) Double Check Valve Assembly with a parallel 3/4" meter and 3/4" Department of Health-approved double check valve assembly. Each assembly shall include a tightly closing resilient seated shut-off valve on each end of the body and each assembly shall be fitted with four properly located resilient seated test cocks.

19. Backflow Device Resilient Seated Shut-Off Valves
Each valve shall be marked with model number with designation of resilient seat; such as "RS" or "R", which must be cast, molded, or affixed onto the body or bonnet of the valve. All ferrous bodied valves shall be coated with a minimum of 4 mills. of epoxy or equivalent polymerized coating. Two-inch or

smaller R.P.B.A.'s and D.C.V.A.'s shall use ball valves, and all 2-1/2" or larger R.P.B.A.'s and D.C.V.A.'s shall use resilient seated gate valves for domestic supply and resilient seated O.S. and Y. valves for fire lines.

20. Concrete marker posts
Concrete marker posts shall be painted with two coats of safety blue paint and shall be set for all valves except auxiliary hydrant valves. Valve markers shall be installed only in unimproved or unpaved areas at a location to be determined at the time of construction by the Public Works Director.

21. Connection to Existing Water Mains
    a. All connections to the existing system and all testing of the new line must be with the authorization of, and in the presence of, the authorized representative of the City. Opening and closing of valves and use of water from the City's system will be done only by the City.
    b. Connections may be made to existing pipes under pressure with a tapping machine by determining the size and type of pipe and installing tapping tee to fit completely with tapping gate valve. Tapping tees shall be installed as shown on the Standard Details and wet tap shall be by the City subject to application. Where cut-ins are permitted to be made in existing pipes, the work shall be conducted as such a time as in such a manner as to minimize the interruption of service. Cut-in time must be approved by the City. Necessary pipe, fittings and gate valves shall be assembled at the site ready for installation prior to the shutting-off of water in the existing main. Once the water has been cut off, the work shall be prosecuted vigorously and shall not be halted until the line is restored to service.
    c. Unless specifically provided for elsewhere in these standards, the Contractor shall have the responsibility of giving at least forty-eight (48) hours notice to the City and affected water customers of intention to disrupt service.

22. Hydrostatic Tests
    a. When a new main is connected to an existing main prior to pressure testing, pressure testing shall not occur until the new main has been satisfactorily sterilized.
    b. Prior to the acceptance of the work, the installation shall be subjected to a hydrostatic pressure test of 200 psi for 15 minutes at the high point in the line and any leaks or imperfections developing under said pressure shall be remedied by the Contractor before final acceptance of the work. No air will be allowed in the lines. The mains shall be tested between valves. Insofar as possible, no hydrostatic pressure shall be placed against the opposite side of the valve being tested. Test pressure shall be maintained while the entire installation is inspected. The Contractor shall provide all necessary equipment and shall perform all work connected to the test. Tests shall be made after all valved connections

have been made. At unvalved connection points, a temporary plug (or 2" blow-off assembly on lines without hydrants) shall be installed at the end of the new main. This shall include concrete blocking necessary to withstand pressures encountered during the hydrostatic test.

c. Once the new line is successfully tested and disinfected, the plug (blow-off) shall be removed and the connection to the existing main completed. Insofar as it is practical, tests shall be made with pipe joints, fittings and valves exposed for inspection. Allowable loss in the test will be determined by the inspector. The Contractor shall perform the test to assure that the equipment to be used for the test is adequate and in good operating condition and the air in the line has been released before requesting the inspector witness the test.

d. Testing shall include water service lines up to the meter setter connection.

23. Sterilization and Flushing of Water Mains

a. Sterilization of water mains shall be accomplished by the Contractor in accordance with the requirements of the State Health Department and in a manner satisfactory to the Engineer. The section to be sterilized shall be thoroughly flushed at maximum flow established by the Public Works Director prior to chlorination. Flushing shall occur between 10 pm and 4 am unless approved otherwise by the Public Works Director. Sections will ordinarily be sterilized between adjacent valves unless, in the opinion of the Public Works Director, a longer section may be satisfactorily handled. When the new main is connected to the existing main prior to pressure testing, sterilization shall be completed and satisfactory prior to pressure testing.

b. Chlorine shall be applied by solution feed at one end of the section with a valve or hydrant at the opposite end open sufficiently to permit a flow through during chlorine application. The chlorine solution shall be fed into the pipeline already mixed by an automatically proportioning applicator so as to provide a steady application rate of not less than 60 ppm chlorine. Hydrants along the chlorinated section shall be open during application until the presence of chlorine has definitely been detected in each hydrant run. When a chlorine concentration of not less than 50 ppm has been established throughout the line, the valves shall be closed and the line left undisturbed for 24 hours. The line shall then be thoroughly flushed and then remain undisturbed for 24 hours before water samples are taken for bacteria testing and approval from the local health agency.

c. As an alternative, the Contractor may use granulated chlorine. Granulated chlorine (dry calcium hypochlorite at 65% - 70% chlorine) shall be placed in the pipe to yield a dosage of not less than 50 ppm. The number of ounces of 65% test calcium hypochlorite required for a 20-foot length of pipe equals .008431d, in which "d" is the diameter in inches. When a chlorine concentration of not less than 50 ppm has

been established throughout the line, including the hydrants, the valves shall be closed and the line left undisturbed for 24 hours. The line shall then be thoroughly flushed and then remain undisturbed for 24 hours before water samples are taken for bacteria testing and approval from the local health agency. Flushing shall occur between 10 pm and 4 am unless approved otherwise by the Public Works Director. The Contractor shall exercise special care in flushing to avoid damage to surrounding property and to maintain water quality.

d. Should the initial treatment result in an unsatisfactory bacteriological test, additional chlorination using the first procedure shall be repeated by the Contractor until satisfactory results are obtained. The Contractor shall be responsible for disposal of treated water flushed from mains and at no time shall chlorinated water from a new main be flushed into a body of fresh water including lakes, rivers, streams, storm drainage systems, and any and all other waters where fish or other natural water life can be expected. Disposal may be made to any available sanitary sewer provided the rate of disposal will not overload the sewer.

CHAPTER 8

STAFF EVALUATION

INTRODUCTION

The purpose of Chapter 8 is to evaluate the City's current and future staffing needs. The evaluation compares the City's staffing levels to the staffing levels of other comparable water utilities including 186 water utilities in the 2005 American Water Works Association (AWWA) *Benchmarking Performance Indicators for Water and Wastewater Utilities: Survey Data and Analyses Report.* The evaluation also includes an analysis of the City's current staff time allocation to determine that each program is receiving the attention it requires. Based on these evaluations, a schedule of recommended staffing levels is provided to ensure that as the City's water system grows and the complexity of the system increases, the Water Operations Department will have sufficient staffing to meet water system operation and maintenance needs.

FULL-TIME EMPLOYEES

The staffing evaluation contained in this Chapter often refers to full-time employees (FTEs). An FTE is defined as the equivalent manpower of one person working full-time on water system operations and maintenance for one year. For the purposes of these analyses, the only FTEs considered are the people who work on the water crews and the people who administer the operations and maintenance staff. Meter readers, billing staff, water resources staff, and City engineers are not included. Based on information received from the City, one FTE is equal to 1,768 hours in one year. This is based on the policy that each employee receives 10 sick days, 15 vacation days, 10 holidays, 4 training days, and that a full day of work is eight hours (including two 15-minute breaks per day).

STAFFING LEVELS

The City of Poulsbo has three Water System O&M staff organized under the Utilities Foreman. One of these staff is the lead water technician and works primarily on the water system. The other O&M Staff divide their time between the all of the City's Public Works systems. Estimates have been made by the City staff to determine the amount of time spent by O&M staff on water system components. **The City currently estimates that the hours spent on water system O&M are equivalent to approximately 3 FTEs**.

BENCHMARKING

Benchmarking is the process of comparing one system to another in order to assess performance. By comparing the City's water system to other systems, the City can judge

its operation and maintenance programs and personnel in terms of its relative efficiency and staffing levels.

Benchmarking is typically done with ratios, such as FTEs per connection, annual operation and maintenance expenditure per million gallons of water produced, or FTEs per gallon of water produced. These ratios allow a comparison of differently sized water systems.

It is important to note that no two water systems are the same. Factors including age of pipe, operational complexity of the source and distribution system, past operation and maintenance programs, geographic characteristics of the service area, and the level of treatment required will vary from system to system and make it difficult to provide a one-to-one comparison between any two systems.

The number of pressure zones is another characteristic of water systems that increase the amount of required maintenance but are not included in the survey. Some utilities in mountainous areas may have many more pressure zones and utilities in the plains may have fewer pressure zones. The layout of each system is also unique and hard to quantify. Some systems have a small, accessible service area that impacts travel time for work crews.

Benchmarking standards are established for the City as part of the operation and maintenance program analysis. Once standards are established, it is recommended that the City use its existing system as a baseline for benchmarking in the future. The City should continue to monitor and update staffing levels to ensure that the established benchmarked standards are being met, or re-evaluate the standards when appropriate.

AWWA 2005 BENCHMARKING DATA AND REPORT

In 2005, the AWWA published a report on benchmarking performance indicator data gathered from 186 water utilities, including the City of Bremerton, Kent Public Works, the City of Richland, Sammamish Plateau Water and Sewer District, the City of Vancouver, Snohomish County PUD, and Seattle Public Utilities. These indicators are designed to be used by utility leaders as a point of comparison among peer utilities for setting effective operational goals. There are 22 benchmarking indicators evaluated in the report. The indicators are split into 5 major categories:

- Organizational Development
- Customer Relations
- Business Operations
- Water Operations
- Wastewater Operations

For the purposes of this evaluation, only water utility data is used. The specific indicators presented in this evaluation and their respective categories are shown below:

- Organizational Development
  - Customer Accounts per Employee, Million Gallons per Day (MGD) Water Delivered per Employee

- Water Operations
  - Operations and Maintenance Cost per Account and per Million Gallons
  - Planned Maintenance Ratios in terms of Cost and Hours

These indicators relate most directly to staffing and provide the City with a gauge with which to compare current and historical staffing levels to those of other peer utilities.

BENCHMARKING DATA

In order to compare the City with other utilities on the selected performance indicators, it is first necessary to compute the value of each of the indicators for the City's water system. Table 8-1 gives the pertinent information for the City's water system and the value of the indicators used in this analysis. Tables 8-2 through 8-5 present AWWA benchmarking data for all survey participants as well as various subsets of the survey participants that have similarities with the City. As presented in the tables, the indicators vary between each subset, but many similarities and trends are apparent. The median number of customer accounts per employee ranges between 385 and 404. The O&M and production costs per gallon are significantly higher for systems with less than 10,000 people, as may be expected to result from the economics of scale.

TABLE 8-1

Poulsbo Performance Indicator Data

Indicator	City of Poulsbo Value (2006)
O&M Employees	3
Customer Accounts	2,698
Water Delivered (mgd)	0.97
Operations and Maintenance Cost	$ 296,047
Customer Accounts per Employee	899
MGD Delivered per Employee	0.32
O&M Cost per Account	$110
O&M Cost per MG	$836
Planned Maintenance Ratio	75%

TABLE 8-2

AWWA Benchmarking Data for All Participants

Indicator	25th Percentile	Median	75th Percentile
Customer Accounts per Employee	260	386	592
MGD Delivered per Employee	0.19	0.28	0.46
O&M Cost per Account	$212	$290	$517
O&M Cost per MG	$849	$1,428	$2,081
Planned Maintenance Ratio (Cost)	43%	64%	83%
Planned Maintenance Ratio (Hours)	44%	60%	80%

TABLE 8-3

AWWA Benchmarking Data for West Region

Indicator	25th Percentile	Median	75th Percentile
Customer Accounts per Employee	292	385	595
MGD Delivered per Employee	0.2	0.29	0.5
O&M Cost per Account	$244	$387	$621
O&M Cost per MG	$860	$1,441	$2,239
Planned Maintenance Ratio (Cost)	38%	58%	79%
Planned Maintenance Ratio (Hours)	44%	64%	80%

TABLE 8-4

AWWA Benchmarking Data for Population 10,000-50,000

Indicator	25th Percentile	Median	75th Percentile
Customer Accounts per Employee	312	404	571
MGD Delivered per Employee	0.14	0.19	0.31
O&M Cost per Account	$156	$247	$343
O&M Cost per MG	$812	$1,324	$2,072
Planned Maintenance Ratio (Cost)	40%	58%	77%
Planned Maintenance Ratio (Hours)	26%	63%	75%

TABLE 8-5

AWWA Benchmarking Data for Population <10,000

Indicator	25th Percentile	Median	75th Percentile
Customer Accounts per Employee	212	395	707
MGD Delivered per Employee	0.07	0.19	0.25
O&M Cost per Account	$203	$290	$345
O&M Cost per MG	$1,376	$2,488	$2,828
Planned Maintenance Ratio (Cost)	34%	59%	80%
Planned Maintenance Ratio (Hours)	24%	48%	70%

Figures 8-1 through 8-4 depict the AWWA benchmarking data in graphical form, with the Poulsbo data superimposed for comparison. As depicted in the figures, Poulsbo has more customers per employee than most participators in the AWWA survey. However, in terms of production, Poulsbo's production in MG per employee is within the 75th percentile for smaller systems with less than 50,000 people.

The number of employees that Poulsbo would need to reach median AWWA benchmarking levels of accounts and production per employee can be calculated using the medians and the City's total number of accounts and total production. These values are given in Table 8-6.

TABLE 8-6

Employees Required to Meet AWWA Benchmarking Median Levels

Indicator	All Participants	Western Region	Population 10,000-50,000	Population <10,000
Customer Accounts per Employee	7.0	7.0	6.7	6.8
MGD Delivered per Employee	3.5	3.3	5.1	5.1

Figure 8-1
Customer Accounts per Employee
(25th Percentile, Median, 75th Percentile)

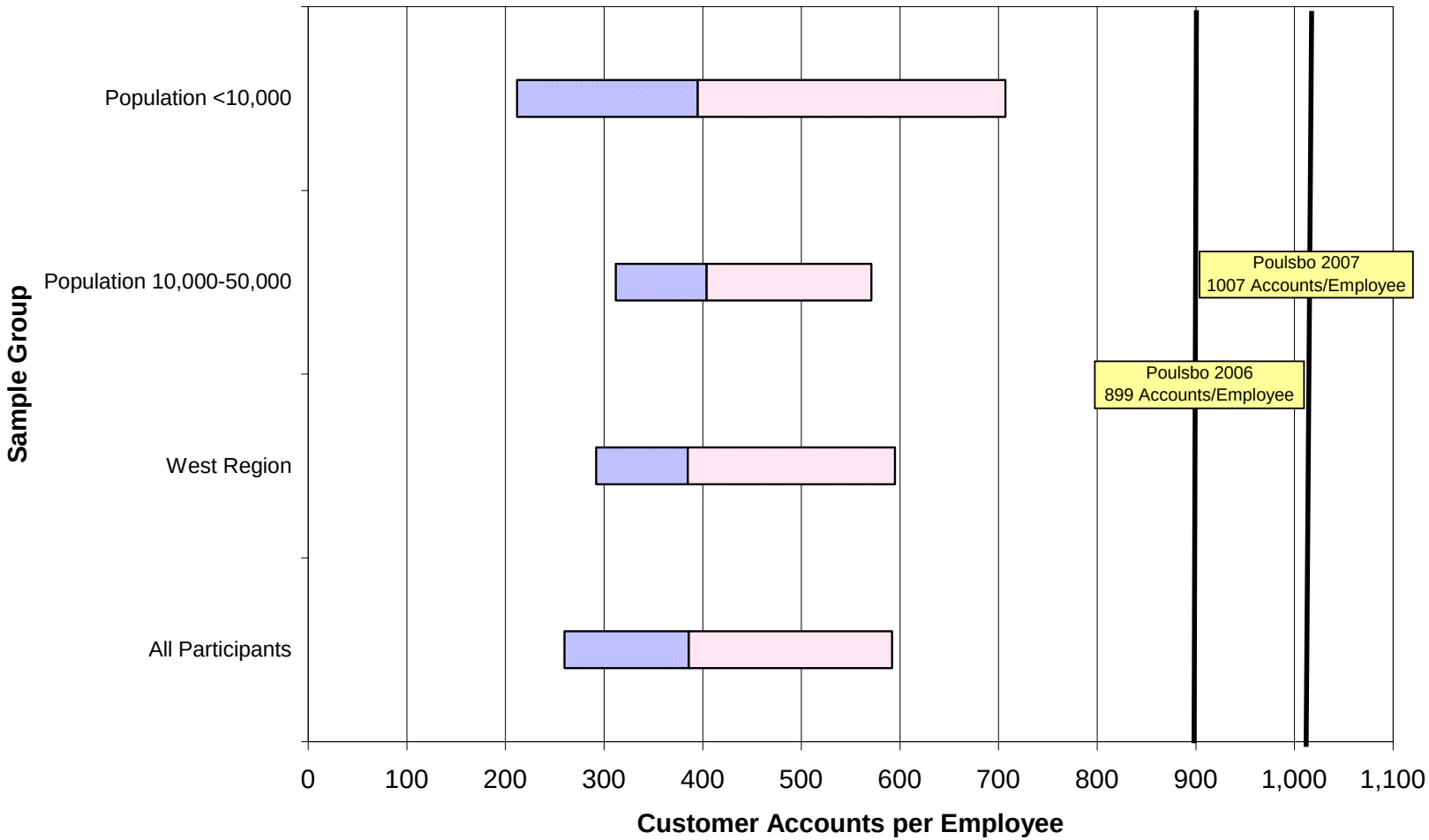

Figure 8-2
Water Delivered per Employee (MGD)
(25th Percentile, Median, 75th Percentile)

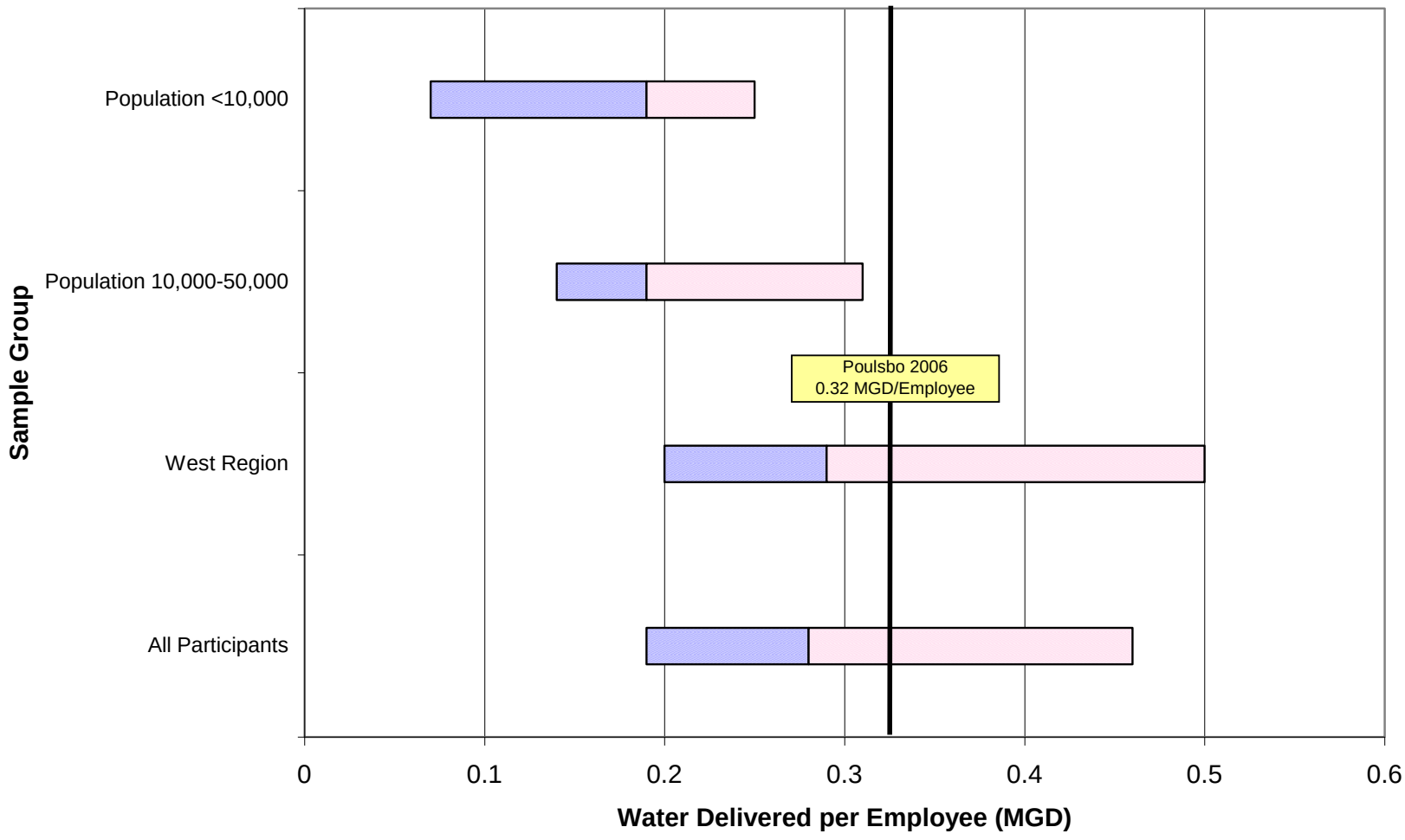

Figure 8-3
O&M Cost per Account
(25th Percentile, Median, 75th Percentile)

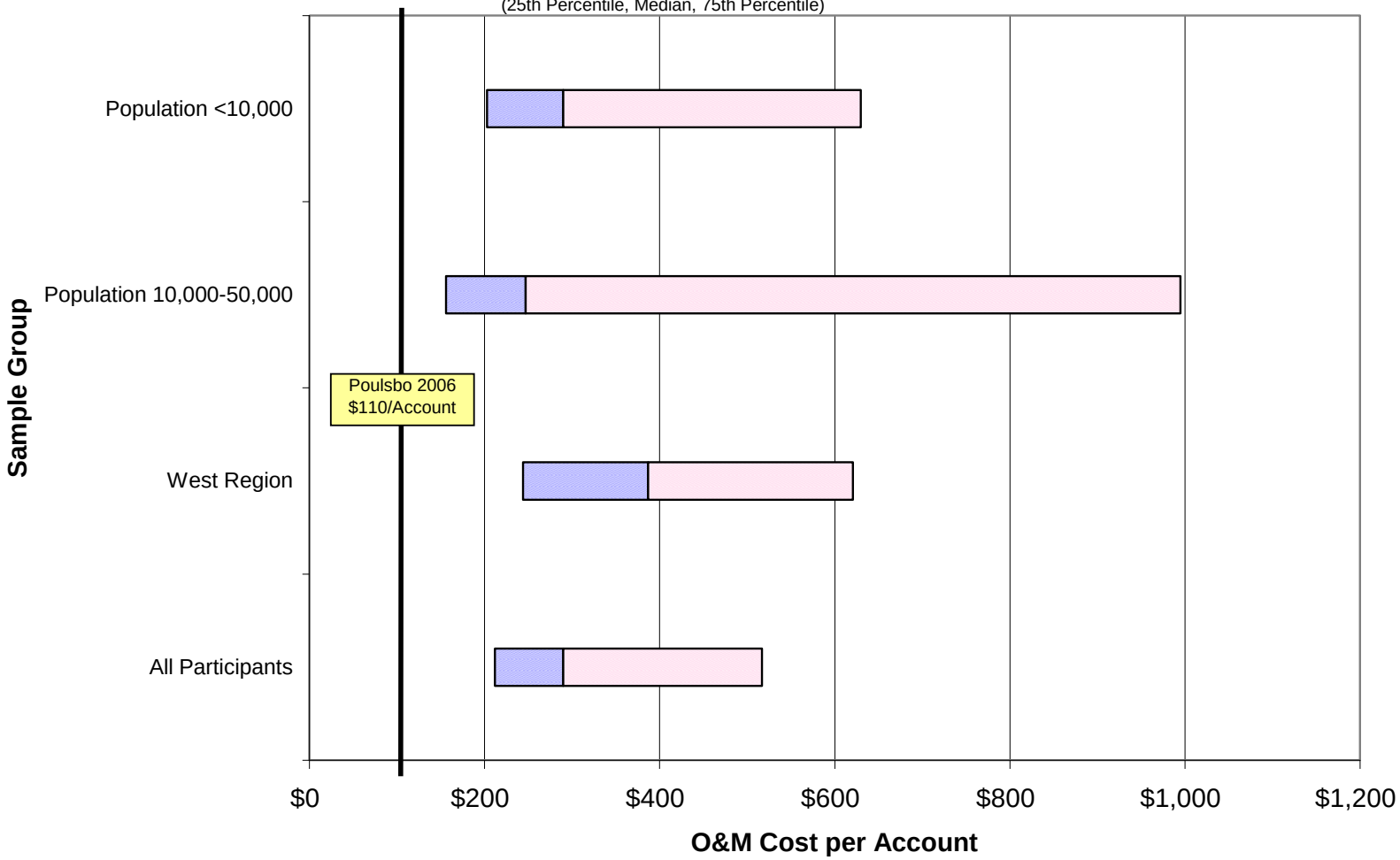

Figure 8-4
O&M Cost per Million Gallons Processed
(25th Percentile, Median, 75th Percentile)

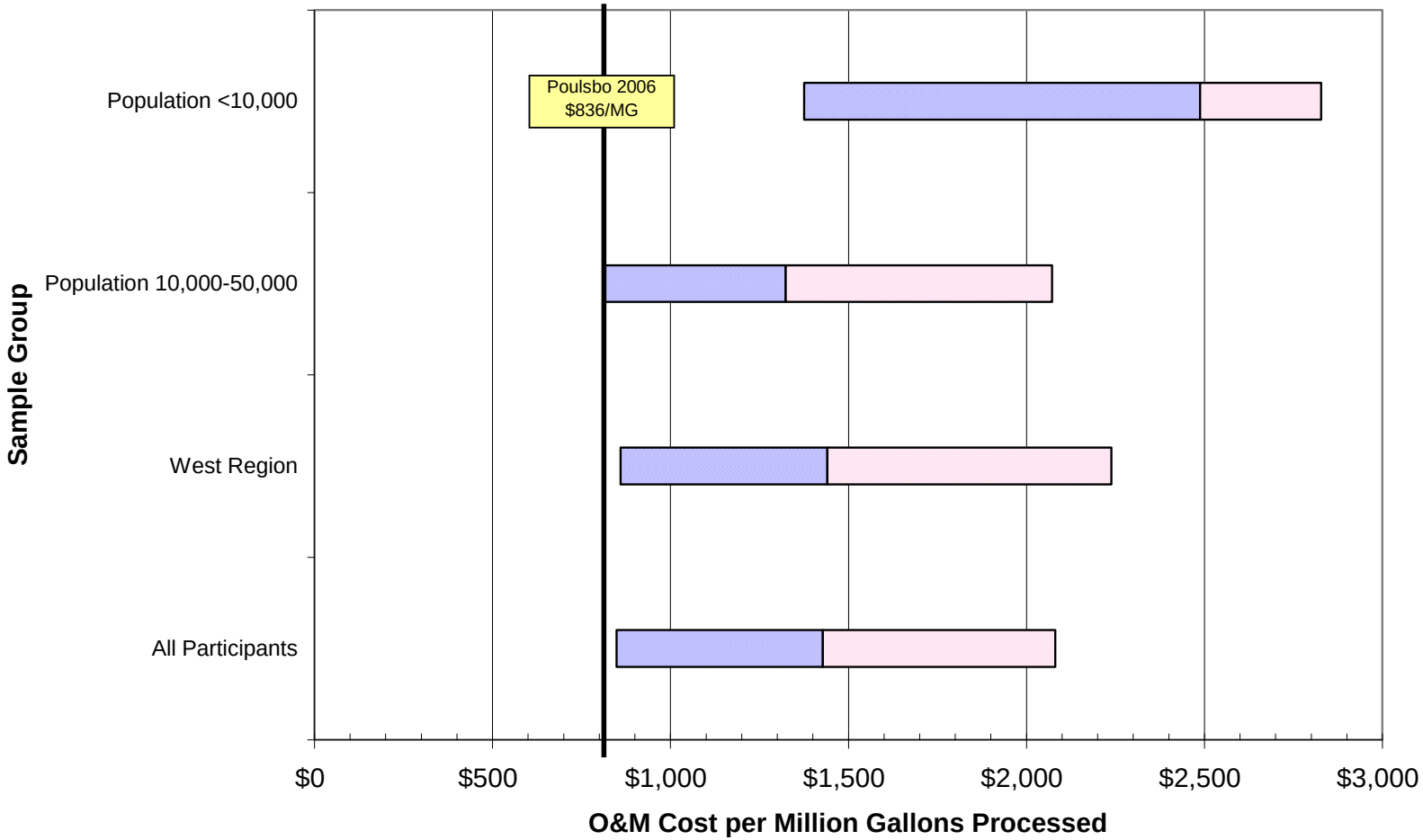

PREVENTIVE MAINTENANCE ESTIMATED TIME REQUIREMENTS

Tables 8-7 through 8-12 estimate the time required for preventive maintenance on the City's wells, booster stations and reservoirs based on the total number of facilities as of December 2007. These estimates are based on individual tasks that fall into the categories of Electrical/Control Maintenance, General Site/Building Maintenance, Mechanical Maintenance, Monitoring/Reporting, Security, Telemetry, Generators, Chemical Addition, and General. Of these tasks, some are categorized as critical, meaning that neglecting the task may result in system dysfunction. Other tasks are categorized as non-critical, meaning the system function will not suffer if the task is not completed with the desired frequency. The non-critical tasks are typified by station cleaning and painting. Although the appearance of City water system facilities may not meet desired City standards, neglecting these tasks does not inhibit the City's ability to provide the desired quantity or quality of service to City customers. It is recommended that staffing levels be adequate to complete every critical maintenance task with the recommended frequency, and complete one third of the non-critical tasks with the recommended frequency. However, the City will make every effort to meet initial goals for non-critical tasks. Non-critical tasks, before all others, can be neglected without affecting the operation of the system. For the purpose of determining **minimum** staffing requirements, non-critical tasks can be delayed, or grouped with similar activities at the site.

The recommended frequency for each task is based on manufacturer's information, AWWA standards, the City's experiences, and general experiences. Appendix U shows each task allocated for preventive maintenance, the time required to complete it, and its frequency. Although a general standard may be recommended for preventive maintenance for particular program elements, standards may require adjustment from system to system, depending on factors such as pipe age, pipe materials, installation practices, water quality, and rate of growth.

Per the preventive maintenance analysis, the City's current preventive maintenance goals require approximately 3.2 full-time employees.

TABLE 8-7

Well PM Program Time Estimate (Deep Well Turbine, 1 Well)

	Critical(1)	Non-Critical(1)
Electrical/Control Maintenance	6	3
General Site/Building Maintenance	0	16
Mechanical Maintenance	177	10
Monitoring/ Reporting	109	0
Security	31	0
Total Critical Hours per Year	**323**	
Total Non-Critical Hours per Year	**29**	
Total Required Hours per Year(2)	**333**	
Total Required Hours per Deep Turbine Well	**333**	

(1) All time estimates are annual totals.
(2) Required hours are all critical hours and one third of non-critical hours.

TABLE 8-8

Well PM Program Time Estimate (Submersible Well, 5 Wells)

	Critical(1)	Non-Critical(1)
Electrical/Control Maintenance	34	15
General Site/Building Maintenance	2	74
Mechanical Maintenance	911	49
Monitoring/ Reporting	565	0
Security	195	0
Total Critical Hours per Year	**1,707**	
Total Non-Critical Hours per Year	**138**	
Total Required Hours per Year(2)	**1,753**	
Total Required Hours per Reservoir	**351**	

(1) All time estimates are annual totals.
(2) Required hours are all critical hours and one third of non-critical hours.

TABLE 8-9

Booster Station PM Program Time Estimate

	Critical(1)	Non-Critical(1)
Electrical/Control Maintenance	9	17
General Site/Building Maintenance	1	46
Mechanical Maintenance	139	16
Monitoring/ Reporting	93	0
Security	78	6
Total Critical Hours per Year	**320**	
Total Non-Critical Hours per Year	**85**	
Total Required Hours per Year(2)	**348**	
Total Required Hours per Booster Station	**116**	

(1) All time estimates are annual totals.
(2) Required hours are all critical hours and one third of non-critical hours.

TABLE 8-10

Reservoir PM Program Time Estimate

	Critical(1)	Non-Critical(1)
Electrical/Control Maintenance	0	0
General Site/Building Maintenance	29	38
Mechanical Maintenance	109	48
Monitoring/ Reporting	70	0
Security	279	16
Total Critical Hours per Year	**487**	
Total Non-Critical Hours per Year	**102**	
Total Required Hours per Year(2)	**521**	
Total Required Hours per Reservoir	**65**	

(1) All time estimates are annual totals.
(2) Required hours are all critical hours and one third of non-critical hours.

TABLE 8-11

Additional PM Program Time Estimates

	Critical[(1)]	Non-Critical[(1)]
Telemetry	460	11
Generator	29	0
Chemical Addition	2,438	0
Generator	165	37
Total Critical Hours per Year	**3,093**	
Total Non-Critical Hours per Year	**48**	
Total Required Hours per Year[(2)]	**3,109**	

(1) All time estimates are annual totals.
(2) Required hours are all critical hours and one third of non-critical hours.

TABLE 8-12

Summary of Existing PM Program Time Requirements

PM Program	Number of Facilities	Critical Hrs/Yr per Facility	Non-Critical Hrs/Yr per Facility	Total Critical Hrs/Yr	Total Non-Critical Hrs/Yr	Total Required Hrs/Yr[(1)]
Deep Turbine Wells	1	327	29	337	327	29
Submersible Wells	5	341	28	351	1,706	139
Booster Stations	3	107	29	116	320	86
Reservoirs	8	61	13	65	486	102
Telemetry	10	46	1	46	460	11
Generator	1	29	0	29	29	0
Chemical Addition	4	488	0	488	1,951	0
General	1	165	37	178	165	37
Total Hours				**5,445**	**403**	**5,579**
Total Full-Time Employee Equivalents						**3.2**

(1) Required hours are all critical hours and one third of non-critical hours

FUTURE PREVENTIVE MAINTENANCE TIME REQUIREMENTS

Based on the City's Water Capital Improvement Program given in the latest Water System Plan, the City's preventive maintenance time requirements will continue to grow as new facilities are added. Table 8-13 estimates the time that will be required for preventive maintenance on the City's system as the Capital Improvement Program is completed.

TABLE 8-13

Future PM Program Time Estimates

Year	Estimated FTEs needed(1)
2008	3.43
2009	3.59
2010	3.78
2011	3.88
2012	3.88
2013	3.88
2014	4.07

(1) Based on 2007 WSP Capital Improvement Program.

EVALUATION OF STAFFING LEVELS

The preceding evaluations indicate that Poulsbo's water system staffing levels are below averages for systems with similar numbers of customers and total water production. The Preventive Maintenance goals of the City also require more time than can be delivered by current staffing levels. As the City adds infrastructure to its water system to improve service and provide for growth, the need for additional staff will increase.

With a future goal of 5 FTEs for the City's water system, the City would still be operating efficiently at approximately the 75th percentile of O&M staff for the number of connections in the system and would have a sufficient workforce to meet the goals of the preventive maintenance program while still attending to other water system needs.

APPENDIX E

MODEL OUTPUT RESULTS

2014 Fire Flow Scenario
Existing System- No Improvments

ID	Static Demand (gpm)	Static Pressure (psi)	Fire-Flow Demand (gpm)	Residual Pressure (psi)	Minimum System Pressure (psi)	Critical Available Node ID	Design Flow (gpm)	Fire Flow Deficit (gpm)
J10	1.8	36.5	1,000.00	34.60	32.8	J10	3,814.20	0
J100	1.8	65.8	1,000.00	59.4	21.4	J219	2,491.80	0
J1003	1.2	50.5	1,000.00	44.9	42.3	J1032	1,709.90	0
J1004	1.2	52.5	1,000.00	45.5	33.4	J1032	1,646.30	0
J1005	1.2	52	1,000.00	45.1	27.8	J1032	1,626.80	0
J1006	1.2	51.3	1,000.00	45.9	27.8	J1032	2,496.00	0
J1007	1.2	48	1,000.00	44.6	27	J1032	2,753.40	0
J1008	1.2	48.2	1,000.00	44.9	20	J1032	2,796.70	0
J1009	1.2	48.5	1,000.00	45.1	29.8	J1011	2,789.50	0
J101	1.8	69.6	1,000.00	63.7	46.6	J219	2,474.40	0
J1010	1.2	45.8	1,000.00	42.2	27.9	J1011	2,687.90	0
J1011	1.2	41.2	1,500.00	10.4	29.6	J1011	1,226.10	273.9
J1012	1.2	48.1	1,000.00	44.5	23.5	J1012	3,106.50	0
J1013	1.2	47.1	1,000.00	43.6	25	J1013	3,080.80	0
J1014	1.2	51.1	1,000.00	37.30	40.2	J1014	1,556.80	0
J1015	1.2	45.5	1,000.00	42.8	20.7	J1015	3,320.70	0
J1016	1.2	44.9	1,000.00	42.2	23.8	J1016	3,287.70	0
J1019	1.2	42.8	1,000.00	40.3	28.8	J1019	3,427.70	0
J102	1.8	64.6	1,000.00	55.7	45.6	J219	2,474.40	0
J1020	1.2	42.1	1,000.00	39.7	20	J1020	3,437.10	0
J1021	1.3	36.8	1,000.00	34.8	20	J1047	2,952.30	0
J1022	1.2	35.8	1,000.00	34	20	J1047	2,776.60	0
J1023	1.2	33.5	1,000.00	31.7	20	J1047	2,843.20	0
J1024	1.2	32	1,000.00	30.3	20	J1047	2,994.60	0
J1025	1.2	31.1	1,000.00	29.7	20	J1047	3,092.00	0
J1026	1.2	35.3	1,000.00	33.3	25.5	J1047	2,907.50	0
J1027	1.2	34.9	1,000.00	33	20	J1047	2,907.50	0
J103	1.8	64.5	1,000.00	59.1	43.1	J219	2,436.30	0
J1032	1.2	34.4	1,000.00	22.7	20	J1032	1,122.70	0
J1033	1.2	35.6	1,000.00	33.7	20	J1047	2,699.60	0
J1034	1.2	39.2	1,000.00	36.5	26.2	J1047	2,680.00	0
J1035	1.2	38.5	1,000.00	35.5	20	J1047	2,656.10	0
J1036	1.2	37.4	1,000.00	34.3	20	J1036	2,569.20	0
J1037	1.2	37.4	1,000.00	33.9	20	J1037	2,418.10	0
J1038	1.2	38	1,000.00	34.5	20	J1042	2,352.10	0
J1039	1.2	37.9	1,000.00	34.5	21.6	J1042	2,314.10	0
J104	1.8	65.7	1,000.00	60.4	20	J219	2,427.10	0
J1040	1.2	37.3	1,000.00	34.5	24	J1047	2,636.70	0
J1041	1.2	34.8	1,000.00	32.8	20	J1047	2,584.80	0
J1042	1.2	35.4	1,000.00	30.2	23.6	J1042	1,814.60	0

ID	Static Demand (gpm)	Static Pressure (psi)	Fire-Flow Demand (gpm)	Residual Pressure (psi)	Minimum System Pressure (psi)	Critical Available Node ID	Design Flow (gpm)	Fire Flow Deficit (gpm)
J1043	1.2	34.7	1,000.00	32.6	20	J1047	2,563.80	0
J1044	1.2	34.5	1,000.00	32.4	20	J1047	2,538.20	0
J1045	1.2	32.8	1,000.00	30.5	20	J1047	2,358.70	0
J1046	1.2	33.9	1,000.00	31.4	20	J1047	2,354.50	0
J1047	1.2	30.2	1,000.00	27.8	20	J1047	2,239.90	0
J1048	1.2	31.7	1,000.00	29.5	20	J1047	2,348.00	0
J1049	1.2	31.2	1,000.00	29	20	J1049	2,490.70	0
J105	1.8	72.1	1,000.00	67	20	J219	2,457.90	0
J1050	1.2	32.5	1,000.00	28.9	24.4	J1050	1,981.80	0
J1051	1.2	39.1	1,000.00	33.1	25.5	J1051	1,887.90	0
J1053	1.2	35.1	1,000.00	31.7	22.8	J1053	2,268.30	0
J1054	1.2	37.2	1,000.00	33.5	24	J1053	2,286.40	0
J1055	1.2	37.1	1,000.00	31.6	24.8	J1055	1,872.60	0
J1056	1.2	45.8	1,000.00	36.8	25.3	J1056	1,778.60	0
J1057	1.2	39.8	1,000.00	30.9	20	J1057	1,547.00	0
J1058	1.2	45.5	1,000.00	41.4	29.3	J1053	2,346.30	0
J1059	1.3	67.8	1,000.00	61.2	53	J1053	2,346.40	0
J106	1.8	36.7	1,000.00	34.1	29.9	J106	3,048.70	0
J1060	1.2	105.3	1,000.00	94.5	80.7	J1053	2,346.30	0
J1061	1.2	49.3	1,000.00	44.3	25	J1063	2,376.20	0
J1062	1.2	50.1	1,000.00	44.9	24	J1063	2,310.60	0
J1063	1.2	43.5	1,000.00	36.8	28.4	J1063	1,996.70	0
J1064	1.2	50.8	1,000.00	45.4	21.3	J1063	2,378.40	0
J1065	1.2	51.9	1,000.00	41.2	43.4	J1065	1,817.90	0
J1066	1.2	51.3	1,000.00	45.8	20	J1071	2,352.70	0
J1067	1.2	52.4	1,000.00	46.6	20	J1071	2,221.90	0
J1068	1.2	47.9	1,000.00	37.6	39.7	J1068	1,722.80	0
J1069	1.2	53	1,000.00	47.1	20	J1071	2,087.10	0
J107	1.8	51.4	1,000.00	45	25.2	J111	2,463.20	0
J1070	1.2	52.9	1,000.00	47	20	J1071	2,101.00	0
J1071	1.2	42.5	1,000.00	26.2	29.6	J1071	1,193.10	0
J1072	1.2	50.8	1,000.00	44.9	20	J1071	2,305.20	0
J1073	1.2	64.2	1,000.00	57.9	35.7	J1086	1,813.70	0
J1074	1.2	65.5	1,000.00	58.9	21.1	J1086	1,745.40	0
J1075	1.2	51.6	1,000.00	44.6	35.1	J1075	2,300.30	0
J1076	1.2	55.8	1,000.00	38.4	42	J1077	1,391.00	0
J1077	1.2	51.6	1,000.00	28.1	32.9	J1077	1,176.40	0
J1078	1.2	50.7	1,000.00	28	32.7	J1078	1,180.10	0
J1079	1.2	53.8	1,000.00	39.1	42.1	J1078	1,503.90	0
J108	1.8	43.9	1,000.00	36.9	20	J108	2,055.00	0

ID	Static Demand (gpm)	Static Pressure (psi)	Fire-Flow Demand (gpm)	Residual Pressure (psi)	Minimum System Pressure (psi)	Critical Available Node ID	Design Flow (gpm)	Fire Flow Deficit (gpm)
J1080	1.2	62.4	1,000.00	55.8	20	J1086	1,678.70	0
J1081	1.2	58.4	1,000.00	51.9	23	J1086	1,640.10	0
J1082	1.2	57.4	1,000.00	51.3	29.2	J1086	1,600.50	0
J1083	1.2	57.2	1,000.00	51.2	20	J1086	1,629.30	0
J1086	1.2	34	1,000.00	21.4	20	J1086	1,060.40	0
J1087	1.2	53.6	1,000.00	47.4	20	J1086	1,709.00	0
J1088	1.2	48.8	1,000.00	43.1	23.8	J1086	1,788.80	0
J109	1.8	48	1,000.00	40.9	20	J109	2,234.50	0
J1090	1.2	81.5	1,000.00	75	34.9	J1086	1,811.00	0
J1091	1.2	81.1	1,000.00	74.7	31.4	J1086	1,810.30	0
J1092	1.2	82.5	1,000.00	73	61.9	J1086	1,811.00	0
J1093	1.2	86.5	1,000.00	80.2	20	J1086	1,773.50	0
J1094	1.2	87.2	1,000.00	80.8	54.2	J1086	1,780.20	0
J1095	1.2	68.7	1,000.00	62.2	26.9	J1086	1,693.70	0
J1096	1.2	68.8	1,000.00	60.5	50.4	J1086	1,693.70	0
J1097	1.2	70.9	1,000.00	53.4	57	J1086	1,693.70	0
J1098	1.2	83.8	1,000.00	75.7	50.9	J1086	1,806.00	0
J1099	1.2	76.9	1,000.00	57.3	61.3	J1100	1,777.50	0
J11	1.8	35.4	1,000.00	34.6	28.5	J12	6,320.00	0
J110	1.8	64	1,000.00	60	20	J219	2,698.80	0
J1100	1.2	75.9	1,000.00	54	58.5	J1100	1,673.20	0
J1101	1.2	94.7	1,000.00	86.2	67.8	J1086	1,872.50	0
J1102	1.2	92	1,000.00	83	72.1	J1086	1,872.50	0
J1103	1.2	90.4	1,000.00	81.2	60.4	J1086	1,892.60	0
J1104	1.2	87.8	1,000.00	76.6	62.9	J1086	1,872.50	0
J1105	1.2	87.8	1,000.00	75.6	60.4	J1086	1,872.50	0
J1106	1.2	96.1	1,000.00	88.9	48.5	J1086	1,832.40	0
J1107	1.2	95	1,500.00	80.1	63.3	J1086	1,828.30	0
J1108	1.2	100.1	1,000.00	82.9	86.4	J1086	1,832.40	0
J1109	1.2	96.2	1,000.00	89.5	35.2	J1086	1,810.60	0
J1110	1.2	96.6	1,000.00	88.9	86.3	J1086	1,810.50	0
J1111	1.2	92.5	1,000.00	36.3	82.5	J1111	1,149.30	0
J1112	1.2	97.2	1,000.00	87.5	64.4	J1086	1,804.80	0
J1113	1.2	96.1	1,000.00	87.9	63.1	J1086	1,807.80	0
J1114	1.6	97	1,000.00	87.3	75.5	J1086	1,808.30	0
J1116	1.2	84.7	1,000.00	70.7	54.1	J1086	1,811.00	0
J1117	1.2	85.1	1,000.00	70	70.8	J1086	1,811.00	0
J1118	1.2	85.4	1,000.00	65.1	56.3	J1086	1,811.00	0
J1119	1.2	86.3	1,000.00	65.4	54.3	J1086	1,811.00	0
J1120	1.2	85.1	1,000.00	47.7	55.8	J1122	1,315.50	0

ID	Static Demand (gpm)	Static Pressure (psi)	Fire-Flow Demand (gpm)	Residual Pressure (psi)	Minimum System Pressure (psi)	Critical Available Node ID	Design Flow (gpm)	Fire Flow Deficit (gpm)
J1122	1.2	81.4	1,000.00	34.9	20	J1122	1,166.10	0
J1123	1.2	113.6	1,000.00	61.5	20	J1122	1,166.10	0
J1127	1.2	114.9	1,000.00	90.6	52.5	J1086	1,811.00	0
J1128	1.2	122.3	1,000.00	91.7	98.1	J1086	1,811.00	0
J1129	1.2	105.6	1,000.00	74.5	80.9	J1129	1,744.90	0
J113	1.8	55.7	1,000.00	38.4	42	J111	1,243.90	0
J1130	1.2	127.4	1,000.00	92.6	99.8	J1086	1,811.00	0
J1131	1.2	105.3	1,000.00	82.2	60.6	J1086	1,811.00	0
J1132	1.2	105.5	1,000.00	81	86.2	J1086	1,811.00	0
J1133	1.2	104.3	1,000.00	68.8	76.3	J1134	1,519.70	0
J1134	1.2	95.9	1,000.00	45.3	56	J1134	1,250.20	0
J1135	1.2	96.6	1,000.00	33.7	46.8	J1135	1,115.30	0
J1136	1.2	92.2	1,000.00	82.6	60.7	J1086	1,902.00	0
J1137	1.2	96.1	1,000.00	72	72.5	J1137	1,878.10	0
J1138	1.2	98.1	1,000.00	68.5	79.7	J1138	1,702.60	0
J1139	1.2	107.8	1,000.00	93.8	30.3	J1152	1,736.00	0
J114	1.8	56.1	1,000.00	49.3	34.7	J136	2,318.40	0
J1140	1.2	108.8	1,000.00	94.1	93.8	J1152	1,741.20	0
J1141	1.2	110.8	1,000.00	73	87.8	J1141	1,614.80	0
J1142	1.2	99.4	1,000.00	86.5	72.4	J1152	1,727.90	0
J1143	1.2	98.6	1,000.00	85.7	58.3	J1152	1,727.60	0
J1144	1.2	85.7	1,000.00	73.9	35.2	J1152	1,680.40	0
J1145	1.2	82.5	1,000.00	70.9	35.5	J1152	1,678.10	0
J1147	1.2	63	1,000.00	48.3	30	J1152	1,406.80	0
J1148	1.2	62.8	1,000.00	48.7	31.5	J1152	1,406.80	0
J1149	1.2	65.6	1,000.00	52.9	37.6	J1152	1,495.80	0
J115	1.8	57.9	1,000.00	45.1	30.9	J119	1,857.40	0
J1150	1.2	62.4	1,000.00	46.4	26.5	J1152	1,308.40	0
J1151	1.2	54.5	1,000.00	36.3	20	J1152	1,219.80	0
J1152	1.2	46	1,000.00	25.3	20	J1152	1,136.60	0
J1153	1.2	47.4	1,000.00	25.4	20	J1153	1,130.50	0
J1155	1.2	74.3	1,500.00	50.6	37.4	J1152	1,673.20	0
J1156	1.2	76.6	1,500.00	51.1	28.5	J1152	1,675.10	0
J1157	1.2	79.4	1,500.00	52.9	24.5	J1152	1,677.10	0
J1158	1.2	79.9	1,500.00	50.40	45.3	J1152	1,692.80	0
J116	1.8	58.7	1,000.00	45	29.7	J119	1,788.40	0
J1160	1.2	81.2	1,500.00	49.9	47.4	J1152	1,707.50	0
J1162	1.2	83.3	1,500.00	52.6	66	J1152	1,709.90	0
J1163	1.2	93	1,500.00	57	59	J1152	1,712.00	0
J1164	1.2	94	1,500.00	57.1	47.6	J1152	1,712.80	0

ID	Static Demand (gpm)	Static Pressure (psi)	Fire-Flow Demand (gpm)	Residual Pressure (psi)	Minimum System Pressure (psi)	Critical Available Node ID	Design Flow (gpm)	Fire Flow Deficit (gpm)
J1165	1.2	93	1,500.00	62.8	76.8	J1152	1,714.10	0
J1167	1.2	94.8	1,500.00	67.1	28.5	J1152	1,721.30	0
J1169	1.2	100.3	1,500.00	73.4	20	J1152	1,727.30	0
J117	1.8	58.7	1,000.00	44.6	28.8	J119	1,757.70	0
J1170	1.2	103.7	1,500.00	75.5	35.3	J1152	1,727.10	0
J1173	1.2	81.6	1,000.00	74.8	40	J1086	1,803.10	0
J1176	1.2	60.9	1,500.00	36.6	20	J1152	1,736.80	0
J1177	1.2	59.5	1,500.00	34	20	J1152	1,736.80	0
J1179	1.2	67.8	1,500.00	42.2	20	J1152	1,736.80	0
J118	1.8	59.8	1,000.00	38.9	43.2	J120	1,409.20	0
J1180	1.2	64.3	1,500.00	39.7	20	J1152	1,736.80	0
J1181	1.2	48.5	1,000.00	39.2	34.7	J1032	1,400.50	0
J1182	1.2	48.8	1,000.00	39.2	33.4	J1032	1,402.10	0
J119	1.8	57.6	1,000.00	35.1	39.7	J119	1,337.90	0
J12	1.8	35.1	1,000.00	33.90	32.1	J12	4,418.40	0
J120	1.8	58.2	1,000.00	31.9	37.3	J120	1,235.20	0
J121	1.8	59.7	1,000.00	27.3	34	J121	1,122.20	0
J122	1.8	63	1,000.00	26	34.4	J125	1,061.00	0
J13	1.8	36.1	1,000.00	34.3	30.7	J13	3,413.40	0
J131	1.8	56.9	1,000.00	49.1	28.1	J136	2,077.20	0
J132	1.8	56.5	1,000.00	48.6	26.8	J136	2,052.10	0
J133	1.8	59.4	1,000.00	47.6	33.7	J133	1,993.80	0
J134	1.8	48.5	1,000.00	36.5	22.4	J136	1,593.80	0
J135	1.8	55.3	1,000.00	46.4	36.4	J136	1,918.60	0
J136	1.8	47	1,000.00	28.9	32.6	J136	1,256.50	0
J137	1.8	58.2	1,000.00	49.2	20.3	J139	2,042.80	0
J138	1.8	57.6	1,000.00	47.7	36.4	J139	1,919.30	0
J139	1.8	50.3	1,000.00	37.4	22	J139	1,628.00	0
J140	1.8	50.9	1,000.00	32.2	36	J140	1,328.70	0
J141	1.8	60	1,000.00	50.2	20	J142	2,127.50	0
J142	1.8	55.6	1,000.00	42	29.4	J142	1,728.30	0
J143	1.8	60	1,000.00	47.1	39.6	J143	1,913.00	0
J144	1.8	62.7	1,000.00	52.5	20	J142	2,138.30	0
J145	1.8	63.2	1,000.00	52.7	26.2	J142	2,215.90	0
J146	1.8	63.7	1,000.00	59.7	20	J219	2,688.80	0
J147	1.8	63.4	1,000.00	52.5	37.2	J147	2,210.70	0
J148	1.8	60	1,000.00	50.3	43.1	J148	2,272.90	0
J149	1.8	58.7	1,000.00	51.3	36.6	J150	2,570.10	0
J15	1.8	43.4	1,000.00	39.7	29.5	J15	2,784.60	0
J150	1.8	57.3	1,000.00	37	41.1	J150	1,408.00	0

ID	Static Demand (gpm)	Static Pressure (psi)	Fire-Flow Demand (gpm)	Residual Pressure (psi)	Minimum System Pressure (psi)	Critical Available Node ID	Design Flow (gpm)	Fire Flow Deficit (gpm)
J151	1.8	67.1	1,000.00	56.9	43.9	J151	2,399.90	0
J152	1.8	66.9	2,500.00	31.8	40.6	J219	2,545.80	0
J153	1.8	70.4	2,500.00	46.4	55.9	J219	2,478.50	21.5
J154	1.8	73.6	1,000.00	68.7	20	J219	2,459.90	0
J155	1.8	74.8	1,000.00	70.1	32.4	J219	2,451.40	0
J156	1.8	71.3	1,500.00	28	54.6	J156	1,649.00	0
J16	1.8	45.6	1,000.00	39.6	32.2	J16	2,236.70	0
J160	1.8	79.4	1,500.00	68.5	67.7	J219	2,379.10	0
J161	1.8	78.3	1,500.00	63.4	62.2	J219	2,379.10	0
J164	1.8	77.1	1,500.00	64	63	J219	2,459.80	0
J166	1.8	79.7	1,500.00	58.3	56.7	J219	2,459.80	0
J167	1.8	81.9	1,000.00	76.9	54.8	J219	2,274.80	0
J168	1.8	81.3	1,000.00	75.6	50.8	J219	2,099.10	0
J169	1.8	83.1	1,000.00	75.3	54.7	J219	2,275.60	0
J170	1.8	82.2	1,000.00	72.8	36.9	J219	2,257.20	0
J171	1.8	84.4	1,000.00	74	54.3	J219	2,232.40	0
J172	1.8	76.8	1,000.00	68.7	65.2	J219	2,159.50	0
J173	1.8	76.1	1,000.00	68.8	33.6	J219	2,141.00	0
J174	1.8	78.3	1,000.00	67.6	69.7	J219	2,159.50	0
J175	1.8	81.7	1,500.00	64.6	48.7	J219	2,001.20	0
J176	1.8	85.4	1,000.00	75	63.1	J219	2,001.20	0
J177	1.8	89.8	1,000.00	79.8	43.8	J219	1,870.90	0
J178	1.8	89.8	1,000.00	79.6	68.1	J219	1,870.90	0
J179	1.8	96.2	1,000.00	82.7	67	J219	1,870.90	0
J18	1.8	42.4	1,000.00	37.1	33.8	J18	2,232.40	0
J180	1.8	97.4	1,000.00	82.7	65.5	J219	1,870.90	0
J181	1.8	105	1,000.00	94.2	41.7	J219	1,741.50	0
J182	1.8	105.9	1,000.00	94.9	40.4	J219	1,729.30	0
J183	1.8	108.3	1,000.00	97.3	38.8	J219	1,704.50	0
J184	1.8	104.6	1,000.00	89.1	71	J219	1,704.50	0
J185	1.8	115	1,000.00	103.8	38.6	J219	1,627.70	0
J186	1.8	114.2	1,000.00	103.1	28.8	J219	1,618.60	0
J187	1.8	125.6	1,000.00	109	89.3	J219	1,741.50	0
J188	1.8	110.7	1,000.00	98.8	56.7	J219	1,600.00	0
J189	1.8	113.5	1,000.00	102.2	36.2	J219	1,601.50	0
J19	1.8	40.3	1,000.00	33.3	21.6	J19	1,809.20	0
J190	1.8	111.8	1,000.00	98	82.1	J219	1,600.00	0
J191	1.8	99.7	1,000.00	87.5	26	J219	1,582.60	0
J192	1.8	98	1,000.00	85.8	20	J219	1,580.70	0
J193	1.8	68.4	2,500.00	28.7	35.3	J219	2,569.80	0

ID	Static Demand (gpm)	Static Pressure (psi)	Fire-Flow Demand (gpm)	Residual Pressure (psi)	Minimum System Pressure (psi)	Critical Available Node ID	Design Flow (gpm)	Fire Flow Deficit (gpm)
J194	1.8	64.6	1,000.00	44.4	48.6	J194	1,560.80	0
J195	1.8	65.5	1,000.00	31.6	38.6	J195	1,178.00	0
J196	1.8	106.9	1,000.00	94.8	36.6	J219	1,596.70	0
J197	1.8	104.9	1,000.00	77.9	83.4	J219	1,600.00	0
J198	1.8	96.8	1,000.00	69.6	75.1	J219	1,582.60	0
J199	1.8	92.5	1,000.00	80.6	35.4	J219	1,586.60	0
J20	1.8	40.5	1,000.00	33.8	25.1	J20	1,850.50	0
J200	1.8	90.9	1,000.00	79.1	20	J219	1,585.00	0
J2004	3.2	70.2	1,000.00	54.4	41.6	J2008	2,065.80	0
J2005	3.2	72	1,000.00	55.3	41.4	J2008	1,967.40	0
J2006	3.2	69.9	1,000.00	50.8	33.7	J2008	1,741.80	0
J2007	3.2	69	1,000.00	49.6	31.8	J2008	1,715.40	0
J2008	3.2	62.7	1,000.00	42.4	23.5	J2008	1,657.70	0
J2009	3.2	64.3	1,000.00	43.9	24.8	J2009	1,690.80	0
J201	1.8	91.4	1,000.00	78.1	20	J219	1,597.90	0
J2010	1.8	40.9	1,000.00	37.4	26.7	J2017	2,049.80	0
J2011	1.8	42	1,000.00	38.3	26.7	J2017	1,987.40	0
J2012	1.8	42.3	1,000.00	38.3	34.2	J2017	1,831.40	0
J2013	1.8	40.9	1,000.00	34.8	28.2	J2017	1,404.70	0
J2014	1.8	38.7	1,000.00	29.9	20	J2017	1,118.60	0
J2015	1.8	38	1,000.00	28.3	20	J2017	1,058.40	0
J2016	1.8	32.2	1,000.00	20.4	20	J2016	1,021.50	0
J2018	1.8	47.5	1,000.00	43.6	27.7	J2017	2,169.30	0
J2019	1.8	62.2	1,000.00	58.3	39.9	J2017	2,788.10	0
J202	1.8	113.8	1,000.00	100.7	43.6	J219	1,605.30	0
J2020	1.8	63.3	1,000.00	59.4	35	J2017	2,860.00	0
J2021	1.8	60.7	1,000.00	51.9	46.7	J2023	2,386.80	0
J2022	1.8	52.8	1,000.00	42.2	20	J2023	1,770.80	0
J2023	1.8	45.2	1,000.00	35.1	20	J2023	1,683.70	0
J2024	1.8	50.6	1,000.00	40.9	20	J2023	1,794.10	0
J2025	1.8	57.6	1,000.00	48.3	20	J2023	1,862.90	0
J2026	1.8	61.9	1,000.00	53	23	J2023	1,946.30	0
J2027	1.8	66.8	1,000.00	58.7	35	J2023	2,099.80	0
J2028	1.8	65.8	1,000.00	57.5	48	J2023	2,099.80	0
J2029	1.8	70.1	1,000.00	62.3	20	J2023	2,160.90	0
J203	1.8	83.2	1,000.00	72	40.5	J219	1,564.00	0
J2030	1.8	65.8	1,000.00	56.9	32.4	J2023	2,241.10	0
J2031	1.8	73.9	1,000.00	66.6	48.3	J2023	2,264.50	0
J2032	1.8	73.4	1,000.00	65.9	53	J2023	2,257.40	0
J2033	1.8	68.8	1,000.00	60.4	36	J2023	2,250.00	0

ID	Static Demand (gpm)	Static Pressure (psi)	Fire-Flow Demand (gpm)	Residual Pressure (psi)	Minimum System Pressure (psi)	Critical Available Node ID	Design Flow (gpm)	Fire Flow Deficit (gpm)
J2034	1.8	68.1	1,000.00	58.6	47.3	J2023	2,250.00	0
J2035	1.8	65.8	1,000.00	54.9	41.9	J2023	2,250.00	0
J2036	1.8	70.7	1,000.00	60.6	48.6	J2023	2,257.40	0
J2037	1.8	75.3	1,000.00	68.5	52.8	J2023	2,374.50	0
J2038	1.8	78.3	1,000.00	72.1	34.3	J2023	2,527.20	0
J2039	1.8	78.4	1,000.00	72.2	53.3	J2023	2,535.90	0
J204	1.8	83.3	1,000.00	72.3	21.8	J219	1,556.50	0
J2040	1.8	78.4	1,000.00	71.4	54.2	J2023	2,582.50	0
J2041	1.8	78.3	1,000.00	71.1	52	J2023	2,599.00	0
J2042	1.8	78.2	1,000.00	73.5	26.4	J2023	3,001.10	0
J2043	1.8	78.4	2,500.00	42.4	50.4	J2023	2,611.60	0
J2044	1.8	71.1	1,000.00	61.3	49.1	J2044	2,575.50	0
J2045	1.8	71	1,000.00	61.9	54.4	J2045	2,685.80	0
J2046	1.8	78.4	1,000.00	74.1	37.7	J2023	3,085.70	0
J2047	1.8	84.4	1,000.00	73.1	67.4	J2023	2,645.70	0
J2048	1.8	94.8	1,000.00	81.1	67.7	J2048	2,596.40	0
J2049	1.8	96.6	1,000.00	82.2	64.5	J2049	2,562.60	0
J205	1.8	85.8	1,000.00	74.4	44.6	J219	1,565.10	0
J2050	1.8	91.2	1,000.00	78.6	69.9	J2050	2,661.60	0
J2051	2	85.3	1,000.00	76.1	60.7	J2023	2,794.80	0
J2052	1.8	85.7	1,000.00	75.7	70.3	J2023	2,796.60	0
J2053	1.8	95	1,000.00	82.9	64.7	J2053	2,794.40	0
J2054	1.8	95.4	1,000.00	83.3	66.2	J2054	2,807.60	0
J2055	1.8	84.7	1,000.00	78.4	78.3	J2023	2,840.60	0
J2056	1.8	85.1	1,000.00	79.2	28.3	J2023	2,842.50	0
J2057	1.8	85.3	1,000.00	79.4	36.2	J2023	2,842.50	0
J2058	1.8	84.5	1,000.00	78.7	20	J2023	2,842.70	0
J2059	1.8	84.5	1,000.00	78.4	58.5	J2023	2,843.00	0
J206	1.8	82.5	1,000.00	69.6	54.9	J219	1,565.10	0
J2060	1.8	82.8	1,000.00	76.4	40.3	J2023	2,843.20	0
J2061	1.8	81	1,000.00	74.9	56.3	J2023	2,843.50	0
J2062	1.8	80.6	1,000.00	75.1	20	J2023	2,843.20	0
J2063	1.8	80	1,000.00	74.6	25.1	J2023	2,843.50	0
J2064	1.8	79.4	1,000.00	74	20	J2023	2,844.00	0
J2065	1.8	79.6	1,000.00	74.2	51.9	J2023	2,844.00	0
J2066	1.8	79.1	1,000.00	73.8	20	J2023	2,844.80	0
J2067	1.8	67.8	1,000.00	58.1	46.6	J2068	2,339.30	0
J2068	1.8	63	1,000.00	43.6	47.6	J2068	1,559.40	0
J2069	1.8	85.5	1,000.00	79.2	32.3	J2023	2,842.50	0
J207	1.8	65.9	1,000.00	55.8	20	J219	1,469.00	0

ID	Static Demand (gpm)	Static Pressure (psi)	Fire-Flow Demand (gpm)	Residual Pressure (psi)	Minimum System Pressure (psi)	Critical Available Node ID	Design Flow (gpm)	Fire Flow Deficit (gpm)
J2070	1.8	86.9	1,000.00	77	79	J2023	2,842.50	0
J2071	1.8	91	1,000.00	68.9	73.4	J2071	1,910.20	0
J2072	1.8	84.1	1,000.00	77.6	27.8	J2023	2,842.50	0
J2073	1.8	84.2	1,000.00	76.1	66.7	J2023	2,842.50	0
J2074	1.8	83.7	1,000.00	76.8	69.1	J2023	2,842.50	0
J2075	1.8	74.9	1,000.00	61.4	45.1	J2075	2,207.20	0
J2076	1.8	89.3	1,000.00	80.4	70	J2023	2,842.50	0
J2077	1.8	93.1	1,000.00	82.2	69.3	J2023	2,842.50	0
J2078	1.8	76.8	1,000.00	73	43.6	J2017	3,229.60	0
J2079	1.8	76.5	1,000.00	72.7	22.5	J2017	3,232.90	0
J208	1.8	70.4	1,000.00	60.1	20	J219	1,503.00	0
J2080	1.8	74.5	1,000.00	70.9	43.1	J2017	3,255.60	0
J2081	1.8	73.7	1,000.00	70.1	33.8	J2017	3,240.50	0
J2082	1.8	73.7	1,000.00	70	49	J2017	3,201.10	0
J2083	1.8	74	1,000.00	70.2	63.8	J2017	3,242.60	0
J2084	1.8	73.6	1,000.00	69.8	37.4	J2017	3,253.90	0
J2085	1.8	70	1,000.00	66	20.6	J2017	3,252.90	0
J2086	1.8	69.1	1,000.00	64.2	36.1	J2091	3,121.40	0
J2087	1.8	66.2	1,000.00	61.6	46.4	J2091	2,936.30	0
J2088	1.8	65.5	1,000.00	60.7	55.3	J2091	2,838.50	0
J2089	1.8	67.1	1,000.00	62.8	51.7	J2091	3,106.00	0
J209	1.8	69.3	1,000.00	59	20	J219	1,497.60	0
J2090	1.8	68.2	1,000.00	63.9	20	J2091	3,150.70	0
J2091	1.8	47.7	1,000.00	39.8	30.4	J2091	2,050.30	0
J2092	1.8	78	1,000.00	72	47.1	J2023	2,664.30	0
J2093	1.8	77.8	1,000.00	72.6	20	J2023	2,867.00	0
J2094	1.8	78.5	1,000.00	73.2	51.9	J2023	2,833.20	0
J2095	1.8	78.1	1,000.00	72.9	20	J2023	2,849.70	0
J2096	1.8	84.9	1,000.00	81.7	60.8	J2549	3,254.10	0
J2097	1.8	85.5	1,000.00	81.6	77.3	J2549	3,254.10	0
J2098	1.8	89	1,000.00	84.1	78.5	J2549	3,254.10	0
J2099	1.8	84.8	1,000.00	79.6	73.7	J2549	3,254.10	0
J21	1.8	45	1,000.00	36.3	25.5	J21	1,789.80	0
J210	1.8	69.4	1,000.00	59.4	23.2	J219	1,514.90	0
J2100	1.8	92.8	1,000.00	90.2	77.4	J2549	2,981.10	0
J2101	1.8	93.1	1,000.00	90.7	55.6	J2549	2,929.50	0
J2102	1.8	90.8	1,000.00	86.9	76.5	J2549	3,061.40	0
J2103	1.8	91.9	1,000.00	89.6	60.5	J2549	2,841.40	0
J2104	1.8	91.4	1,000.00	89.1	46.3	J2549	2,832.90	0
J2105	1.8	88.5	1,000.00	86.2	44.2	J2549	2,815.10	0

ID	Static Demand (gpm)	Static Pressure (psi)	Fire-Flow Demand (gpm)	Residual Pressure (psi)	Minimum System Pressure (psi)	Critical Available Node ID	Design Flow (gpm)	Fire Flow Deficit (gpm)
J2106	1.8	85.5	1,000.00	83.2	44.6	J2549	2,742.30	0
J2107	1.8	83.7	1,000.00	81.4	44.4	J2549	2,724.30	0
J2108	1.8	72.2	1,000.00	67.1	61.9	J2549	3,086.00	0
J2109	1.8	63.1	1,000.00	57.6	49	J2549	3,197.70	0
J211	1.8	71.6	1,000.00	61.9	20	J219	1,528.60	0
J2110	1.8	64.4	1,000.00	50.9	53.7	J2110	1,937.60	0
J2111	1.8	60.8	1,000.00	55.4	43.9	J2113	3,212.40	0
J2112	1.8	60.9	1,000.00	54.9	51.2	J2112	2,977.40	0
J2113	1.8	54.1	1,000.00	46.1	39.1	J2113	2,274.20	0
J2114	1.8	51.5	1,000.00	42.7	31.4	J2114	2,057.80	0
J2115	1.8	47.2	2,500.00	2.8	26.9	J2115	1,896.70	603.3
J2116	1.8	46.3	2,500.00	8.4	32.6	J2116	2,032.90	467.1
J2118	1.8	45.9	2,500.00	12.4	20	J2118	2,160.70	339.3
J212	1.8	75.2	1,000.00	64.5	33.8	J219	1,480.90	0
J2120	1.8	50.7	2,500.00	15.5	20	J2117	2,203.40	296.6
J2121	1.8	48.1	2,500.00	13.5	20	J2119	2,195.30	304.7
J2122	1.8	51.5	2,500.00	17.6	20	J2119	2,218.30	281.7
J2123	1.8	56.5	2,500.00	22.5	20	J2119	2,280.10	219.9
J2124	1.8	50.1	2,500.00	15.9	20	J2119	2,210.60	289.4
J2126	1.8	56.2	2,500.00	23.5	20	J2119	2,241.90	258.1
J2128	1.8	76.3	2,500.00	47.8	54.3	J2119	2,360.40	139.6
J2129	1.8	92	1,000.00	87	49.4	J2119	2,725.80	0
J213	1.8	82.7	1,000.00	73.9	51.2	J219	1,617.00	0
J2130	1.8	91.6	1,000.00	86	66.1	J2119	2,898.20	0
J2131	1.8	90.2	1,000.00	84.4	61.8	J2119	3,002.70	0
J2132	1.8	90.4	1,000.00	84.5	61.3	J2119	3,028.80	0
J2133	1.8	85.5	1,000.00	79.3	51.9	J2119	3,196.40	0
J2134	2	88.5	1,000.00	82	46.3	J2119	3,556.80	0
J2135	1.8	88.8	1,000.00	82.3	47	J2119	3,721.60	0
J2137	1.8	88.7	1,000.00	82.3	51.9	J2119	3,975.60	0
J2138	1.8	86.9	1,000.00	78.7	69.3	J2138	3,419.80	0
J2139	1.8	87	1,000.00	76.3	63.8	J2139	2,888.60	0
J214	1.8	46.8	1,000.00	32.6	20	J219	1,259.70	0
J2141	1.8	60.7	1,000.00	54.2	49.5	J2141	2,819.10	0
J2142	1.8	60.8	1,000.00	52.9	43.3	J2143	2,295.10	0
J2143	1.8	54.7	1,000.00	35	39.1	J2143	1,365.50	0
J2144	1.8	61.2	1,000.00	53	40.5	J2143	2,461.10	0
J2145	1.8	61.4	1,000.00	53.2	39.5	J2145	2,468.20	0
J2146	1.8	62.1	1,000.00	54.3	45.4	J2147	2,417.00	0
J2147	1.8	58.2	1,000.00	39.5	43.4	J2147	1,481.00	0

ID	Static Demand (gpm)	Static Pressure (psi)	Fire-Flow Demand (gpm)	Residual Pressure (psi)	Minimum System Pressure (psi)	Critical Available Node ID	Design Flow (gpm)	Fire Flow Deficit (gpm)
J2148	1.8	60.3	1,000.00	54.2	50.7	J2169	2,262.90	0
J2149	1.8	49.8	1,000.00	46.2	37.5	J2169	2,011.30	0
J215	1.8	45.2	1,000.00	31	20	J219	1,257.90	0
J2150	1.8	47.4	1,000.00	43.9	36.1	J2169	1,993.00	0
J2151	1.8	44.6	1,000.00	41.5	34.5	J2169	1,972.10	0
J2152	1.8	54.4	1,000.00	46.2	36	J2169	1,972.10	0
J2153	1.8	83	3,000.00	69.4	67.3	J2549	5,323.70	0
J2154	1.8	83.2	3,000.00	70.3	65.9	J2160	5,296.20	0
J2156	1.8	80.8	3,000.00	64.1	68.2	J2160	5,139.10	0
J2157	1.8	82	1,000.00	77.2	61.6	J2160	4,901.60	0
J2158	1.8	75.3	1,000.00	70.2	51.1	J2160	4,541.80	0
J2159	1.8	74.9	1,000.00	69.3	65.5	J2160	4,156.70	0
J216	1.8	39.6	1,000.00	26.7	20	J219	1,269.70	0
J2160	1.8	61.7	1,000.00	51.6	42.1	J2160	2,525.30	0
J2161	1.8	63	1,000.00	57.2	31.6	J2162	4,052.60	0
J2162	1.8	62.1	1,000.00	55.9	51.5	J2162	3,840.40	0
J2163	1.8	80.5	1,000.00	66.9	53.1	J2163	2,517.00	0
J2164	1.8	89.4	1,000.00	69.6	47.6	J2164	2,107.20	0
J2165	1.8	83.3	1,000.00	75.7	33.1	J2166	3,399.70	0
J2166	1.8	66.8	1,000.00	58.5	20	J2166	3,163.90	0
J2168	1.8	23.6	1,000.00	22.6	20	J2168	2,198.10	0
J2169	1.8	24.3	1,000.00	22.7	20	J2169	1,825.70	0
J217	1.8	39.7	1,000.00	27	20	J219	1,273.20	0
J2174	1.8	43.4	1,000.00	40.5	20	J2174	3,840.60	0
J2175	1.8	44.7	1,000.00	41.7	36.8	J2175	3,843.70	0
J2176	1.8	42.8	1,000.00	33.7	26.7	J2176	1,676.50	0
J2177	1.8	41.1	1,000.00	30.7	20	J2177	1,491.70	0
J2178	1.8	41.6	1,000.00	31.1	20	J2179	1,441.70	0
J2179	1.8	40.1	1,000.00	21.8	25.6	J2179	1,056.40	0
J218	1.8	39.7	1,000.00	26.9	20	J219	1,251.30	0
J2180	1.8	35.7	1,000.00	27.9	20	J2180	2,219.40	0
J2181	1.8	56.3	1,000.00	49.1	20.9	J2180	2,434.40	0
J2182	1.8	56.7	1,000.00	47.8	54.1	J2180	2,521.40	0
J2183	1.8	63.5	1,000.00	42.3	52.2	J2183	1,494.20	0
J2184	1.8	64.3	1,000.00	42.9	52	J2184	1,498.00	0
J2185	1.8	65.9	1,000.00	44.3	52.4	J2185	1,521.30	0
J2186	1.8	58.3	1,000.00	48.6	42.8	J2186	2,587.30	0
J2187	1.8	62.3	1,000.00	50.8	37.5	J2187	2,294.50	0
J2188	1.8	64.3	1,000.00	51.6	45.7	J2188	2,178.70	0
J2189	1.8	69.1	1,000.00	53.8	41.5	J2189	1,996.70	0

ID	Static Demand (gpm)	Static Pressure (psi)	Fire-Flow Demand (gpm)	Residual Pressure (psi)	Minimum System Pressure (psi)	Critical Available Node ID	Design Flow (gpm)	Fire Flow Deficit (gpm)
J219	1.8	38.7	1,000.00	25.6	20	J219	1,235.70	0
J2190	1.8	87.3	1,000.00	70.3	48.5	J2189	2,243.20	0
J2191	1.8	91.8	1,000.00	74.5	46.6	J2192	2,203.50	0
J2192	1.8	86.5	1,000.00	61.8	66.9	J2192	1,742.70	0
J2194	1.8	93.1	1,000.00	75.8	48.6	J2201	2,150.20	0
J2195	1.8	95.7	1,000.00	78.8	58.8	J2201	1,979.70	0
J2196	1.8	95.9	1,000.00	79.4	37.2	J2201	1,926.00	0
J2197	1.8	93.9	1,000.00	67.3	73.2	J2201	1,447.60	0
J2198	1.8	94.8	1,000.00	66.5	72.7	J2201	1,397.80	0
J2199	1.8	88.6	1,000.00	55.9	62.7	J2201	1,288.00	0
J220	1.8	43.5	1,000.00	31.5	20	J219	1,321.50	0
J2200	1.8	72.7	1,000.00	24.8	34.9	J2201	1,042.10	0
J2202	1.8	95.7	1,000.00	48.5	58.5	J2203	1,290.90	0
J2203	1.8	94.7	1,000.00	43.4	54.1	J2203	1,232.30	0
J2204	1.8	94.9	1,000.00	36.4	48.5	J2204	1,147.80	0
J2205	1.8	94.7	1,000.00	78.5	20	J2201	1,983.70	0
J2206	1.8	96.8	1,000.00	81.2	69	J2201	2,094.80	0
J2207	1.8	95.3	1,000.00	83.2	79	J2201	2,659.90	0
J2208	1.8	88.1	1,000.00	66.8	71.2	J2209	1,891.90	0
J2209	1.8	86.5	1,000.00	37	77.4	J2209	1,178.40	0
J221	1.8	43.5	1,000.00	31.7	20	J219	1,334.80	0
J2210	1.8	97.7	1,000.00	90.3	64.6	J2201	3,747.10	0
J2211	1.8	97.9	1,000.00	88.4	82.7	J2211	3,534.90	0
J2212	1.8	96.7	1,000.00	86.2	76.9	J2213	3,195.90	0
J2213	1.8	95.7	1,000.00	77.6	81.3	J2213	2,240.00	0
J2214	1.8	95.2	1,000.00	88.6	65.1	J2180	3,779.50	0
J2215	1.8	93.3	1,000.00	86.8	65.1	J2180	3,799.90	0
J2216	1.8	83.8	1,000.00	54.5	70.4	J2216	1,539.30	0
J2217	1.8	88.1	1,000.00	82.1	65.4	J2220	3,841.20	0
J2218	1.8	87.7	1,000.00	81.7	65.5	J2220	3,827.70	0
J2219	1.8	76.8	1,000.00	-18.2	59.8	J2220	695.80	304.2
J222	1.8	48.4	1,000.00	35.3	20	J219	1,292.50	0
J2221	1.8	77.9	1,000.00	72.9	52	J2180	4,038.70	0
J2222	1.8	77.3	1,000.00	64	72.3	J2222	2,292.00	0
J2223	1.8	72.4	1,000.00	56.3	64.7	J2223	1,939.90	0
J2224	1.8	70.9	1,000.00	56.3	53.2	J2224	2,022.00	0
J2225	1.8	74	1,000.00	65	71.3	J2225	2,955.60	0
J2226	1.8	74.3	1,000.00	67.6	50.8	J2226	3,715.90	0
J2228	1.8	89.3	1,000.00	77.6	58.3	J2229	2,768.80	0
J2229	1.8	85.3	1,000.00	73.6	55.1	J2229	2,709.70	0

ID	Static Demand (gpm)	Static Pressure (psi)	Fire-Flow Demand (gpm)	Residual Pressure (psi)	Minimum System Pressure (psi)	Critical Available Node ID	Design Flow (gpm)	Fire Flow Deficit (gpm)
J223	1.8	44.9	1,000.00	32.1	20	J219	1,327.80	0
J2230	1.8	79.3	1,000.00	70	64.6	J2230	2,949.00	0
J2231	1.8	79.2	1,000.00	71.5	64.2	J2231	3,361.20	0
J2232	1.8	73.7	1,000.00	49.1	58.3	J2232	1,544.30	0
J2233	1.8	73.9	1,000.00	49.5	60	J2233	1,554.50	0
J2234	1.8	82.6	1,000.00	-42	60.4	J2234	689.30	310.7
J2235	1.8	83	1,000.00	77.5	75.7	J2549	3,966.40	0
J2236	1.8	83.2	1,000.00	78.4	65.2	J2549	3,893.00	0
J2237	1.8	72	1,000.00	67.4	46.2	J2180	4,195.70	0
J2238	1.8	71.4	1,000.00	66.8	46.3	J2180	4,214.10	0
J2239	1.8	66	1,000.00	50.3	49.1	J2239	1,827.30	0
J224	1.8	47.5	1,000.00	32.6	20	J219	1,327.80	0
J2240	1.8	64	1,000.00	42.9	54.2	J2240	1,506.40	0
J2241	1.8	53.7	1,000.00	45.3	33.3	J2241	2,551.80	0
J2242	1.8	52	1,000.00	44.4	29	J2243	2,456.90	0
J2243	1.8	51	1,000.00	43.4	32.6	J2243	2,400.50	0
J2244	1.8	48.6	1,000.00	41.7	36	J2244	2,319.70	0
J2245	1.8	79.9	1,000.00	76.2	67.4	J2549	3,699.20	0
J2246	1.8	64.7	1,000.00	60.4	42.1	J2549	4,291.90	0
J2247	1.8	63.4	1,000.00	52.8	60.2	J2247	2,230.90	0
J2248	1.8	79.5	1,000.00	76.6	50.1	J2549	3,446.00	0
J2249	1.8	79.2	1,000.00	76.2	68.2	J2549	3,480.70	0
J225	1.8	45.2	1,000.00	28.6	20	J225	1,276.60	0
J2250	1.8	75.1	1,000.00	71.9	61	J2549	3,670.90	0
J2251	1.8	58.7	1,000.00	54.7	48.7	J2549	4,285.30	0
J2252	1.8	57.9	1,000.00	54.4	40	J2549	4,375.10	0
J2253	1.8	56.6	1,000.00	53.2	39.2	J2549	4,375.90	0
J2254	1.8	56.4	1,000.00	52.2	42.8	J2254	3,987.00	0
J2255	1.8	53.4	1,000.00	49.8	34.3	J2256	3,893.40	0
J2256	1.8	47.8	1,000.00	43.4	34.4	J2256	3,205.70	0
J2257	1.8	52.5	1,000.00	49.7	20	J2549	4,625.00	0
J2258	1.8	52.1	1,000.00	49.3	41.9	J2549	4,674.50	0
J2259	1.8	49.4	1,000.00	46.3	36.5	J2259	4,377.30	0
J226	1.8	46.8	1,000.00	34.2	20	J219	1,342.30	0
J2260	1.8	54.5	1,000.00	51.3	36.2	J2549	4,489.70	0
J2261	1.8	56.4	1,000.00	53.2	44.5	J2549	4,379.30	0
J2262	1.8	56.3	1,000.00	53.3	31.3	J2549	4,381.50	0
J2263	1.8	59.9	1,000.00	56.2	39	J2549	4,085.40	0
J2264	1.8	55.8	1,000.00	52.7	41.4	J2549	4,345.20	0
J2265	1.8	44	1,000.00	41.1	30.7	J2265	3,863.00	0

ID	Static Demand (gpm)	Static Pressure (psi)	Fire-Flow Demand (gpm)	Residual Pressure (psi)	Minimum System Pressure (psi)	Critical Available Node ID	Design Flow (gpm)	Fire Flow Deficit (gpm)
J2266	1.8	46.4	1,000.00	43.1	36.3	J2266	3,793.30	0
J2267	1.8	85.6	1,000.00	80.7	78.5	J2549	3,114.70	0
J2268	1.8	84.6	1,000.00	78.4	79.6	J2549	3,114.70	0
J2269	1.8	94.9	1,000.00	88.1	79.7	J2549	2,870.30	0
J227	1.8	48	1,000.00	35.6	20	J219	1,347.60	0
J2270	1.8	95	1,000.00	88.1	78.4	J2549	2,841.30	0
J2271	1.8	97.5	1,000.00	83.7	86.5	J2271	2,619.20	0
J2272	1.8	95.2	1,000.00	89.1	84.5	J2549	2,659.50	0
J2273	1.8	97.3	1,000.00	83.3	86.2	J2273	2,595.90	0
J2274	1.8	97.9	1,000.00	79	82.9	J2274	2,193.40	0
J2275	1.8	95.3	1,000.00	89.8	86.6	J2549	2,622.20	0
J2276	1.8	95	1,000.00	90.6	89.2	J2549	2,572.70	0
J2277	1.8	94.8	1,000.00	91.2	90.5	J2549	2,555.90	0
J2278	1.8	94.9	1,000.00	92.3	64.1	J2549	2,533.70	0
J2279	1.8	89	1,000.00	86.4	38.1	J2549	2,532.50	0
J228	1.8	53.7	1,000.00	41.7	20	J219	1,362.30	0
J2280	1.8	85.5	1,000.00	82.9	42.1	J2549	2,532.00	0
J2281	1.8	77.6	1,000.00	75.2	44	J2549	2,533.80	0
J2282	1.8	73	1,000.00	70.7	44.1	J2549	2,537.00	0
J2285	1.8	68.2	1,000.00	65.9	25.3	J2549	2,560.30	0
J2286	1.8	94	1,000.00	91.2	82.1	J2549	2,523.90	0
J2287	1.8	82.6	1,000.00	53.3	70.4	J2287	1,519.20	0
J2288	1.8	79.5	1,000.00	47.3	64.4	J2288	1,402.10	0
J2289	1.8	62.8	1,000.00	59.3	41.6	J2549	2,976.40	0
J229	1.8	61.4	1,000.00	50	20	J219	1,381.30	0
J2290	1.8	62.9	1,000.00	59.5	46.4	J2549	2,809.60	0
J2291	1.8	62.7	1,000.00	59.4	47.2	J2549	2,785.70	0
J2292	1.8	55.2	1,000.00	42	44.8	J2294	1,631.20	0
J2293	1.8	54	1,000.00	39.4	42.4	J2293	1,610.30	0
J2296	1.8	60	1,000.00	58	54.9	J2549	2,502.70	0
J2297	1.8	56.7	1,000.00	50.5	44.9	J2297	2,817.80	0
J2298	1.8	58.2	1,000.00	51.6	43.1	J2298	2,766.00	0
J2299	1.8	60.4	1,000.00	53.9	46.7	J2299	2,888.10	0
J23	1.8	34.9	1,000.00	31.3	21.4	J23	2,203.30	0
J230	1.8	54.2	1,000.00	42.8	20	J219	1,382.00	0
J2300	1.8	60.4	1,000.00	57.2	36.7	J2549	4,100.10	0
J2301	1.8	58.9	1,000.00	55.5	41.6	J2303	3,793.50	0
J2302	1.8	50.3	1,000.00	44.5	38	J2303	2,500.60	0
J2303	1.8	47.4	1,000.00	40.2	31.9	J2303	2,181.90	0
J2304	1.8	60.3	1,000.00	57	44.4	J2303	3,928.90	0

ID	Static Demand (gpm)	Static Pressure (psi)	Fire-Flow Demand (gpm)	Residual Pressure (psi)	Minimum System Pressure (psi)	Critical Available Node ID	Design Flow (gpm)	Fire Flow Deficit (gpm)
J2308	1.8	80.6	3,000.00	56.5	70.6	J2308	4,775.90	0
J2309	1.9	76.7	1,500.00	70.1	55.7	J1152	5,376.30	0
J231	1.8	53.5	1,000.00	42.2	20	J219	1,382.10	0
J2310	1.8	79	3,500.00	53.8	63.2	J1152	5,045.90	0
J2311	1.8	79.7	3,500.00	58	67.3	J1152	5,169.80	0
J2312	1.8	79.2	1,000.00	74.3	59.4	J1152	1,001.80	0
J2313	1.8	81.2	3,000.00	58.6	58.3	J1152	4,699.30	0
J2314	1.8	79.5	3,000.00	57.8	61.3	J1152	4,468.90	0
J2315	1.8	75.9	3,000.00	56.1	61.6	J1152	4,244.40	0
J2316	1.8	73.7	3,000.00	55.3	61.3	J1152	4,122.50	0
J2317	2	79.4	3,000.00	48.6	68.8	J1152	4,122.60	0
J2318	1.8	73.7	3,000.00	60.3	66.3	J1152	3,851.80	0
J2319	1.8	75.1	3,000.00	65.6	70.2	J1152	3,787.80	0
J232	1.8	55.5	1,000.00	44.5	20	J219	1,389.40	0
J2320	1.8	75.7	3,000.00	70.1	60	J1152	3,679.20	0
J2321	1.8	74.5	3,000.00	69	54.7	J1152	3,442.80	0
J2322	1.8	74.1	3,000.00	68.9	51.5	J1152	3,354.10	0
J2324	1.8	70.9	3,000.00	65.9	56.2	J1152	3,119.00	0
J2325	1.8	77.1	3,000.00	67	67.6	J1152	3,509.30	0
J2326	1.8	79.5	3,000.00	74.2	66.2	J1152	3,910.90	0
J2327	1.8	79.5	3,000.00	74.1	70.6	J1152	4,180.50	0
J2328	1.8	79.8	3,000.00	74.1	74.6	J2549	4,277.00	0
J2329	1.8	80.4	3,000.00	71.1	75	J2549	4,214.10	0
J233	1.8	56.3	1,000.00	45.4	20	J219	1,393.10	0
J2330	1.8	67.1	3,000.00	56	52.1	J2549	3,820.80	0
J2331	1.8	74.5	3,000.00	63.6	65.5	J2549	3,756.70	0
J2332	1.8	75.7	3,000.00	66.4	69.5	J2549	3,741.00	0
J2333	1.8	63.1	3,000.00	46.7	50.9	J2549	3,778.50	0
J2334	1.8	65.2	3,000.00	31.3	54.2	J2334	3,524.80	0
J2335	1.8	69.4	3,000.00	26.8	55.7	J2335	3,258.00	0
J2336	1.8	70.6	3,000.00	22.8	55.4	J2336	3,096.40	0
J2337	1.8	75.7	3,000.00	67.8	50.3	J2549	3,739.40	0
J2338	1.8	77	3,000.00	68.5	62.1	J2549	3,654.00	0
J2339	1.8	77.7	3,000.00	69	61	J2549	3,608.90	0
J234	1.8	78	1,000.00	66.6	20	J219	1,432.60	0
J2340	1.8	77.1	3,000.00	68.5	60	J2549	3,852.40	0
J2341	1.8	77.2	3,000.00	68.6	59.7	J2549	3,862.60	0
J2342	1.8	78.3	3,000.00	69.7	61	J2549	3,937.00	0
J2343	1.8	78.8	3,000.00	70.6	65	J2549	3,994.20	0
J2344	1.8	78.5	3,000.00	71	68.3	J2549	4,040.70	0

ID	Static Demand (gpm)	Static Pressure (psi)	Fire-Flow Demand (gpm)	Residual Pressure (psi)	Minimum System Pressure (psi)	Critical Available Node ID	Design Flow (gpm)	Fire Flow Deficit (gpm)
J2345	1.8	77.7	3,000.00	72.1	54.7	J2549	4,183.40	0
J2346	1.8	76.1	3,000.00	65.3	69.4	J2549	3,977.40	0
J2347	1.8	45.5	3,000.00	32.3	35.2	J2549	3,890.70	0
J2348	1.8	56.5	3,000.00	42.3	43.4	J2549	3,827.20	0
J2349	1.8	78.1	3,000.00	64.3	66.3	J2549	3,673.30	0
J235	1.8	83.8	1,000.00	76.7	51.6	J219	2,099.10	0
J2350	1.8	78.7	3,000.00	66.8	61.8	J2549	3,568.90	0
J2351	1.8	78.5	3,000.00	66.3	66.6	J2549	3,564.80	0
J2352	1.8	75.4	3,000.00	58.5	63.4	J2549	3,459.30	0
J2353	1.8	76.2	3,000.00	58.5	62.9	J2549	3,440.20	0
J2354	1.8	75.9	3,000.00	57.6	61.2	J2549	3,416.30	0
J2355	1.8	75.3	3,000.00	56.1	58.1	J2549	3,374.20	0
J2356	1.8	77.8	3,000.00	66.8	69.9	J2549	3,567.40	0
J2357	1.8	77.5	3,000.00	68.3	66.8	J2549	3,578.70	0
J2358	1.8	74.6	3,000.00	64.3	59.2	J2549	3,499.50	0
J2359	1.8	73.6	3,000.00	60.5	63.5	J2549	3,381.60	0
J236	1.8	74	1,000.00	64.4	20	J219	1,550.20	0
J2360	1.8	67.4	1,000.00	65.1	56.3	J2549	2,891.70	0
J2361	1.8	73.2	3,000.00	59	59	J2549	3,197.40	0
J2363	1.8	76.9	3,000.00	70.1	63.5	J2549	4,448.00	0
J2364	1.8	74.8	3,000.00	60.5	69.7	J2549	4,448.00	0
J2365	1.8	78.3	3,000.00	71.9	67.4	J2549	4,268.30	0
J2367	1.8	76.9	3,000.00	68.4	72.7	J2549	4,664.70	0
J2368	1.8	77.3	3,000.00	67.1	72	J2549	4,752.40	0
J2369	1.8	77	3,000.00	64.6	72.5	J2549	4,752.40	0
J237	1.8	76.5	1,000.00	65	57.3	J219	1,502.40	0
J2370	1.8	78.1	3,000.00	64.7	69.8	J2549	4,940.00	0
J2371	1.8	78.4	3,000.00	64.2	68.9	J2549	4,996.10	0
J2373	1.8	79.1	3,000.00	62.1	62	J2549	5,224.20	0
J2374	1.8	59.9	1,000.00	57.9	42.5	J2549	2,489.70	0
J2375	1.8	63.2	1,000.00	60.9	53.8	J2549	2,473.10	0
J2376	1.8	70.1	1,000.00	67.7	57.4	J2549	2,468.50	0
J2377	1.8	78.2	1,000.00	75.6	64.9	J2549	2,475.40	0
J2378	1.8	82.6	1,000.00	80.1	62	J2549	2,481.90	0
J2379	1.8	72	1,000.00	56.9	57.3	J2379	1,997.20	0
J238	1.8	82.2	1,000.00	73.5	51.6	J219	1,630.60	0
J2380	1.8	78.3	1,000.00	63.2	71.3	J2380	2,122.70	0
J2381	1.8	82.9	1,000.00	80.3	73.5	J2549	2,483.70	0
J2382	1.8	82.2	1,000.00	79.6	72.3	J2549	2,479.80	0
J2383	1.8	76	1,000.00	73.6	42	J2549	2,463.10	0

ID	Static Demand (gpm)	Static Pressure (psi)	Fire-Flow Demand (gpm)	Residual Pressure (psi)	Minimum System Pressure (psi)	Critical Available Node ID	Design Flow (gpm)	Fire Flow Deficit (gpm)
J2384	1.8	72.1	1,000.00	69.2	59.3	J2549	2,412.50	0
J2385	1.8	62.9	1,000.00	60.1	44.1	J2549	2,534.30	0
J2386	1.8	60.9	1,000.00	58	44	J2549	2,516.80	0
J2387	1.8	53	1,000.00	50.4	27.6	J2549	2,494.80	0
J2388	1.8	57.5	1,000.00	54.9	45.6	J2549	2,398.50	0
J2389	1.8	64.3	1,000.00	61.7	45.2	J2549	2,298.80	0
J2390	1.8	68.9	1,000.00	66.1	55.9	J2549	2,335.00	0
J2391	1.8	63.4	1,000.00	60.7	53.2	J2549	2,134.40	0
J2392	1.8	64.3	1,000.00	61.4	51	J2549	2,002.90	0
J2393	1.8	33.6	1,000.00	31.2	20	J2549	1,406.40	0
J2394	1.8	37.5	1,000.00	34.7	24.6	J2549	1,519.30	0
J2397	2	25.5	1,000.00	23.2	20	J2405	606.20	393.8
J24	1.8	35.8	1,000.00	32.5	24.1	J25	2,262.00	0
J2402	1.8	34	1,000.00	30.6	20	J2405	509.70	490.3
J2403	1.8	37.5	1,000.00	34.3	21.1	J2405	534.50	465.5
J2404	1.8	44.7	1,000.00	39.9	34.1	J2405	534.50	465.5
J2405	1.80	21	1,000.00	17.6	20	J2405	477.90	522.1
J2406	1.8	70.6	1,000.00	68.2	54.1	J2549	2,508.50	0
J2407	1.8	73	1,000.00	70.4	58	J2549	2,481.30	0
J2408	1.8	74.7	1,000.00	72	60.9	J2549	2,477.90	0
J2409	1.8	70.7	1,000.00	67.5	53.3	J2549	2,479.30	0
J2410	1.8	60.2	1,000.00	56.9	48.2	J2549	2,519.20	0
J2411	1.8	59.4	1,000.00	55.6	40.2	J2549	2,503.50	0
J2412	1.8	52.7	1,000.00	48.8	28.8	J2549	2,493.80	0
J2413	1.8	45.9	1,000.00	42.2	29.5	J2549	2,482.90	0
J2414	1.8	59.5	1,000.00	57	33.3	J2549	2,499.80	0
J2415	1.8	59.9	1,000.00	57.3	45.2	J2549	2,511.30	0
J2416	1.80	59.8	1,000.00	57.1	48.7	J2549	2,513.40	0
J2417	1.8	59.9	1,000.00	57.2	41	J2549	2,520.40	0
J2418	1.8	59.9	1,000.00	57	48.7	J2549	2,519.10	0
J2419	1.8	61.2	1,000.00	58.1	45.9	J2549	2,518.00	0
J2420	1.8	60.1	1,000.00	57.3	33.3	J2549	2,519.90	0
J2421	1.8	60.2	1,000.00	57.2	47.4	J2549	2,519.50	0
J2422	1.8	58.5	1,000.00	55.9	38.9	J2549	2,504.00	0
J2423	1.8	55.8	1,000.00	53.3	35.3	J2549	2,533.50	0
J2424	1.8	64.7	1,000.00	62.4	20	J2549	2,591.10	0
J2425	1.8	66.9	1,000.00	64.7	20	J2549	2,611.40	0
J2426	1.8	55.6	1,000.00	53.1	30.3	J2549	2,452.40	0
J2427	1.8	63.6	1,000.00	60.7	50	J2549	2,518.00	0
J2428	1.8	65	1,000.00	62.8	36.3	J2549	2,624.50	0

ID	Static Demand (gpm)	Static Pressure (psi)	Fire-Flow Demand (gpm)	Residual Pressure (psi)	Minimum System Pressure (psi)	Critical Available Node ID	Design Flow (gpm)	Fire Flow Deficit (gpm)
J2429	1.8	84.8	1,000.00	82.5	25.6	J2549	2,732.10	0
J2430	1.8	61.7	1,000.00	58.5	47	J2549	2,667.80	0
J2431	1.8	57.5	1,000.00	47.5	49.6	J2431	2,116.90	0
J2432	1.8	57.7	1,000.00	46.8	33.5	J2432	2,013.30	0
J2433	1.8	58.2	1,000.00	46.1	31.3	J2433	1,911.40	0
J2434	1.8	71.8	1,000.00	69.5	57.5	J2549	2,468.60	0
J2435	1.8	69.7	1,000.00	66.9	57.5	J2549	2,467.10	0
J25	1.8	34.2	1,000.00	28.9	22.2	J25	1,719.80	0
J2507	1.8	83.6	1,000.00	78.1	54.4	J2180	3,900.30	0
J2508	1.8	88.7	1,000.00	81.9	74.3	J2220	3,827.70	0
J2513	1.6	71.2	1,000.00	46	20	J2515	1,222.10	0
J2514	1.6	56	1,000.00	28.9	20	J2514	1,174.40	0
J2515	1.6	56	1,000.00	28.7	20	J2515	1,169.10	0
J2516	1.6	66.8	1,000.00	40.4	20	J2515	1,201.10	0
J2517	1.6	64.7	1,000.00	36.9	20	J2515	1,201.10	0
J2526	3.9	58.8	1,000.00	52.2	38	J2526	3,170.40	0
J2527	3.9	74.6	1,000.00	68.6	43	J2529	3,085.50	0
J2528	3.9	63.5	1,000.00	57.4	20	J2529	3,067.70	0
J2529	3.9	52.8	1,000.00	46	20	J2529	2,664.80	0
J2531	3.9	81.4	1,000.00	76.3	70.9	J2529	3,093.80	0
J2534	3.9	113	1,000.00	103	93.2	J2538	3,331.10	0
J2535	3.9	118.2	1,000.00	106.4	78.4	J2538	3,155.60	0
J2536	3.9	104.4	1,000.00	91.4	44.2	J2537	3,000.30	0
J2537	3.9	95.7	1,000.00	82.2	20	J2537	2,795.20	0
J2538	3.9	91.4	1,000.00	78.1	20	J2538	2,726.40	0
J2539	3.9	100	1,000.00	87.7	52.8	J2538	2,958.60	0
J2549	1.8	24	1,000.00	21.2	20	J2405	552.80	447.2
J3	1.8	68.8	1,000.00	46.4	20	J2	1,214.30	0
J3001	3.1	43.9	3,000.00	37.5	39.4	J3001	7,021.20	0
J3002	3.1	44.3	1,000.00	42.7	39.3	J3002	6,649.30	0
J3003	3.1	54.4	1,000.00	52.2	47.7	J3022	5,605.90	0
J3004	3.1	65.2	1,000.00	62.6	47.7	J3022	5,281.50	0
J3005	3.2	67.3	1,000.00	64.5	47	J3022	5,202.00	0
J3006	3.2	74.3	1,000.00	71.4	51.8	J3022	5,145.60	0
J3007	3.2	75.8	1,000.00	72.9	52.5	J3022	5,125.70	0
J3008	3.2	74.3	1,000.00	71.2	45.8	J3022	5,009.80	0
J3009	3.2	80.6	1,000.00	77.1	63.5	J3022	5,009.80	0
J3010	3.1	83.1	1,000.00	78.4	59.2	J3022	5,004.30	0
J3011	3.1	59.2	1,000.00	56.9	48.7	J3022	5,448.50	0
J3012	3.2	63.5	3,000.00	51.4	46.9	J3022	4,855.30	0

ID	Static Demand (gpm)	Static Pressure (psi)	Fire-Flow Demand (gpm)	Residual Pressure (psi)	Minimum System Pressure (psi)	Critical Available Node ID	Design Flow (gpm)	Fire Flow Deficit (gpm)
J3013	3.2	60.3	3,000.00	46.9	38.4	J3022	4,507.10	0
J3014	3.1	60.1	3,000.00	45.9	34.8	J3022	4,325.30	0
J3015	3.1	57.4	3,000.00	42.4	43.5	J3022	4,181.20	0
J3016	3.2	51.7	3,000.00	34.6	35.7	J3022	3,831.00	0
J3017	3.2	49.4	3,000.00	31.5	32.3	J3022	3,831.00	0
J3018	3.2	46.5	3,000.00	27.4	22.2	J3022	3,556.70	0
J3019	3.1	47.9	1,000.00	43.7	21.4	J3022	3,366.30	0
J3020	3.1	46.6	1,000.00	42.2	20	J3022	3,211.00	0
J3021	3.1	45.7	1,000.00	41	20	J3022	3,052.40	0
J3022	3.1	44.8	1,000.00	39.9	20	J3022	2,909.10	0
J3023	3.1	47.4	1,000.00	42.2	20	J3022	2,909.10	0
J3024	3.2	54.4	1,000.00	49.9	25.1	J3022	3,366.30	0
J3025	3.1	51.5	1,000.00	46.8	20	J3022	3,366.30	0
J3026	3.1	47.2	1,000.00	42.5	26.3	J3026	3,449.40	0
J3027	3.1	52.9	2,250.00	34.7	26.2	J3027	3,319.60	0
J3028	3.1	66.7	3,000.00	33.9	35.4	J3027	3,319.60	0
J3029	3.1	68.4	3,000.00	34.1	35.5	J3027	3,319.60	0
J3030	3.2	71.4	3,000.00	36	26	J3027	3,319.60	0
J3031	3.2	70.5	3,000.00	35.3	37	J3027	3,319.60	0
J3032	3.2	66.5	3,000.00	51.7	24.5	J3022	4,440.70	0
J3033	3.1	65.8	3,000.00	50.9	22.8	J3022	4,454.80	0
J3034	3.2	75.2	1,000.00	72	27.9	J3022	4,514.70	0
J3035	3.2	81.6	1,000.00	78.4	30	J3022	4,570.50	0
J3036	3.2	84.2	1,000.00	81	25.6	J3022	4,652.90	0
J3037	3.2	83.3	1,000.00	80.1	28.8	J3022	4,739.40	0
J3038	3.2	85.3	1,000.00	82.1	36.3	J3022	4,808.00	0
J3039	3.2	82.7	1,000.00	79.6	39.8	J3022	4,891.80	0
J3040	3.2	76.4	1,000.00	73.3	39.4	J3022	4,981.70	0
J3041	3.2	75.7	3,000.00	37.5	39.2	J3027	3,319.60	0
J3042	3.2	81.4	3,000.00	40	41.8	J3027	3,347.00	0
J3043	3.2	80.8	3,000.00	40.2	41.5	J3027	3,330.10	0
J3044	3.2	75.5	3,000.00	28.4	29.7	J3027	3,593.70	0
J3045	3.1	74.8	3,000.00	27.3	28.8	J3045	3,598.70	0
J3046	3.2	75.5	3,000.00	26.3	25.5	J3046	3,527.20	0
J3047	3.1	80	3,000.00	30.7	27	J3046	3,622.30	0
J3048	3.1	94.9	1,000.00	82.9	34.1	J3046	3,787.90	0
J3049	3.2	58.5	3,000.00	44.1	22.3	J3022	4,349.20	0
J3050	3.1	77.5	3,000.00	33.1	35	J3027	3,528.60	0
J3052	3.2	80.5	1,000.00	74.5	33.3	J3052	4,067.70	0
J3053	3.2	82	1,000.00	75.8	33	J3053	4,040.80	0

ID	Static Demand (gpm)	Static Pressure (psi)	Fire-Flow Demand (gpm)	Residual Pressure (psi)	Minimum System Pressure (psi)	Critical Available Node ID	Design Flow (gpm)	Fire Flow Deficit (gpm)
J3056	1.5	165.7	1,000.00	152.1	80.9	J3056	4,747.70	0
J3057	3.1	154.9	1,000.00	142.3	79.8	J3057	4,866.70	0
J3058	3.2	135.4	1,000.00	124.8	74.4	J3022	4,972.70	0
J3059	3.1	130.9	2,750.00	85.8	73.9	J3022	4,972.70	0
J3060	3.2	107.4	1,000.00	101.2	74.7	J3022	4,972.70	0
J3061	3.2	72.1	1,000.00	66.9	33.6	J3061	4,206.60	0
J34	1.8	34.9	1,000.00	33.7	30.5	J34	4,075.00	0
J35	1.8	39.3	1,000.00	35.7	27.9	J35	2,721.10	0
J36	1.8	40	1,000.00	35.2	29.8	J37	2,255.60	0
J37	1.8	39.4	1,000.00	33.4	26.5	J37	1,974.00	0
J38	1.8	41.6	1,000.00	35.4	28.1	J38	2,041.40	0
J39	1.8	44.4	1,000.00	39.3	20.9	J44	2,425.60	0
J4	1.8	49.3	1,000.00	35.1	20	J4	1,491.80	0
J40	1.8	41.4	1,000.00	35.8	20	J44	2,173.70	0
J41	1.8	43.8	1,000.00	35.3	25.2	J41	1,800.00	0
J42	1.8	40	1,000.00	34.2	20	J44	2,064.00	0
J43	1.8	39.8	1,000.00	34	20	J44	2,040.30	0
J44	1.8	39.5	1,000.00	32.7	25	J44	1,857.40	0
J45	1.8	40.1	1,000.00	34.3	20	J44	2,056.90	0
J46	1.8	40.5	1,000.00	31.8	21.6	J46	1,641.90	0
J47	1.8	47	1,000.00	36.9	25.4	J47	1,756.90	0
J48	1.8	50.3	1,000.00	38.9	25.9	J52	1,714.40	0
J49	1.8	53.4	1,000.00	41.2	26.6	J52	1,714.40	0
J5	1.8	36.8	1,000.00	35.2	33.5	J5	4,150.60	0
J50	1.8	53.4	1,000.00	39	22.3	J52	1,497.20	0
J51	1.8	54.2	1,000.00	39.5	22.1	J52	1,497.20	0
J52	1.8	49.2	1,000.00	33.2	20	J52	1,404.10	0
J53	1.8	69.6	1,000.00	49.9	26.4	J2515	1,405.20	0
J54	1.8	74.1	1,000.00	51.5	24.2	J2515	1,299.20	0
J55	1.8	44.7	1,000.00	39.7	23.6	J63	2,573.90	0
J56	1.8	45.2	1,000.00	40.1	22.7	J63	2,510.60	0
J57	1.8	49.5	1,000.00	42.4	34.4	J63	2,028.50	0
J58	1.8	49.1	1,000.00	38.3	25.7	J63	1,582.10	0
J59	1.8	50.8	1,000.00	38.8	24.6	J63	1,487.00	0
J6	1.8	36.7	1,000.00	35.1	33.5	J6	4,288.10	0
J60	1.8	49.5	1,000.00	36.4	20	J63	1,415.40	0
J61	1.8	48.7	1,000.00	35	20	J63	1,446.90	0
J62	1.8	47.9	1,000.00	34.3	20	J63	1,442.60	0
J63	1.8	44.1	1,000.00	28.9	20	J63	1,297.30	0
J64	1.8	48.4	1,000.00	33.2	20	J64	1,423.70	0

ID	Static Demand (gpm)	Static Pressure (psi)	Fire-Flow Demand (gpm)	Residual Pressure (psi)	Minimum System Pressure (psi)	Critical Available Node ID	Design Flow (gpm)	Fire Flow Deficit (gpm)
J65	1.8	53.9	1,000.00	48	20	J111	2,391.60	0
J66	1.8	41.9	1,000.00	36.3	20	J66	2,262.20	0
J67	1.8	43.2	1,000.00	36.4	27.3	J67	2,061.20	0
J68	1.8	43	1,000.00	34	25.6	J68	1,718.70	0
J69	1.8	44.9	1,000.00	36	20	J69	1,822.90	0
J7	1.8	36.6	1,000.00	35.1	26.3	J7	4,503.40	0
J70	1.8	46.4	1,000.00	35.4	25.8	J70	1,649.60	0
J71	1.8	47	1,000.00	38.8	36.5	J71	1,992.50	0
J72	1.8	47.3	1,000.00	39.9	32.1	J72	2,147.10	0
J73	1.8	47.1	1,000.00	37	27.5	J73	1,770.40	0
J74	1.8	46.6	1,000.00	38.2	20	J74	1,956.20	0
J75	1.8	45.1	1,000.00	37.1	20.6	J75	1,950.40	0
J76	1.8	47.8	1,000.00	33.7	21.9	J77	1,449.30	0
J78	1.8	48.8	1,000.00	33.8	20	J78	1,453.80	0
J8	1.8	36.3	1,000.00	34.9	22.4	J8	4,519.90	0
J80	1.8	50.1	1,000.00	34.7	20	J81	1,450.60	0
J82	1.8	51	1,000.00	36.6	23.6	J82	1,549.50	0
J83	1.8	51.7	1,000.00	37.8	26.6	J83	1,599.80	0
J85	1.8	52.2	1,000.00	39	30.1	J86	1,636.40	0
J86	1.8	51.2	1,000.00	29.3	33.8	J86	1,221.40	0
J87	1.8	57.5	1,000.00	50.6	37.6	J86	2,617.90	0
J88	1.8	54.7	1,000.00	47.8	37.8	J88	2,600.70	0
J89	1.8	55.5	1,000.00	48.9	32.1	J89	2,693.00	0
J9	1.8	36.2	1,000.00	34.6	30.7	J9	4,119.80	0
J90	1.8	52.1	1,000.00	46	20	J90	2,668.10	0
J91	1.8	52.2	1,000.00	46	20	J91	2,656.60	0
J92	1.8	56.6	1,000.00	48.4	38.4	J93	2,324.50	0
J93	1.8	53.7	1,000.00	43.8	36.3	J93	2,028.40	0
J94	1.8	58.3	1,000.00	48.5	41	J94	2,181.80	0
J95	1.8	56.3	1,000.00	48.2	39.5	J95	2,387.00	0
J96	1.8	57.4	1,000.00	51.7	20	J219	2,632.30	0
J97	1.8	57.7	1,000.00	52.1	23.5	J219	2,608.40	0
J98	1.8	59.1	1,000.00	53.6	20	J219	2,546.00	0
J99	1.8	59.9	1,000.00	54.1	38	J219	2,534.50	0

2020 Fire Flow Scenario
Existing System- No Improvments

ID	Static Demand (gpm)	Static Pressure (psi)	Fire-Flow Demand (gpm)	Residual Pressure (psi)	Minimum System Pressure (psi)	Critical Available Node ID	Design Flow (gpm)	Fire Flow Deficit (gpm)
J10	2.2	36.5	1,000.00	34.4	32.7	20	3,728.40	0
J100	2.2	65.6	1,000.00	58.8	20.3	10	2,408.40	0
J1003	1.1	50.5	1,000.00	44.8	42.3	5.1	1,709.90	0
J1004	1.1	52.5	1,000.00	45.5	33.4	7.6	1,646.20	0
J1005	1.1	52	1,000.00	45	27.8	7.1	1,626.70	0
J1006	1.1	51.3	1,000.00	45.9	27.8	18.5	2,497.50	0
J1007	1.1	48	1,000.00	44.6	27.1	15.3	2,754.60	0
J1008	1.1	48.2	1,000.00	44.9	20	15.2	2,797.90	0
J1009	1.1	48.4	1,000.00	45.1	29.8	12.7	2,791.20	0
J101	2.2	69.4	1,000.00	63.2	45.7	4.2	2,392.20	0
J1010	1.1	45.7	1,000.00	42.2	27.9	15.4	2,689.40	0
J1011	1.1	41.1	1,500.00	10.4	29.6	20	1,225.80	274.2
J1012	1.1	48	1,000.00	44.5	23.5	20	3,108.40	0
J1013	1.1	47.1	1,000.00	43.6	25.1	20	3,082.80	0
J1014	1.1	51.1	1,000.00	37.3	40.2	20	1,557.00	0
J1015	1.1	45.5	1,000.00	42.8	20.9	20	3,323.60	0
J1016	1.1	44.9	1,000.00	42.2	23.8	20	3,290.80	0
J1019	1.1	42.8	1,000.00	40.30	28.9	20	3,433.80	0
J102	2.2	64.4	1,000.00	55.2	44.9	18.4	2,392.20	0
J1020	1.1	42.1	1,000.00	39.7	20	20	3,443.70	0
J1021	1.1	36.8	1,000.00	34.8	20	17.8	2,962.20	0
J1022	1.1	35.8	1,000.00	34.1	20	15.5	2,785.30	0
J1023	1.1	33.5	1,000.00	31.7	20	18.3	2,852.20	0
J1024	1.1	32	1,000.00	30.3	20	20	3,003.90	0
J1025	1.1	31.1	1,000.00	29.7	20	19.5	3,101.50	0
J1026	1.1	35.3	1,000.00	33.3	25.6	18.5	2,916.20	0
J1027	1.1	34.9	1,000.00	33	20	18	2,916.20	0
J103	2.2	64.4	1,000.00	58.5	42.1	3.6	2,354.50	0
J1032	1.1	34.3	1,000.00	22.7	20	20	1,122.10	0
J1033	1.1	35.6	1,000.00	33.7	20	16	2,707.90	0
J1034	1.1	39.2	1,000.00	36.50	26.3	18	2,688.20	0
J1035	1.1	38.5	1,000.00	35.6	20	19.2	2,664.20	0
J1036	1.1	37.4	1,000.00	34.3	20	20	2,573.70	0
J1037	1.1	37.4	1,000.00	33.9	20	20	2,422.20	0
J1038	1.1	38	1,000.00	34.5	20	18.5	2,356.40	0
J1039	1.1	37.9	1,000.00	34.5	21.7	17.5	2,318.30	0
J104	2.2	65.5	1,000.00	59.8	20	1.4	2,345.60	0
J1040	1.1	37.3	1,000.00	34.6	24.1	18.4	2,641.90	0
J1041	1.1	34.8	1,000.00	32.8	20	16.7	2,592.60	0
J1042	1.1	35.4	1,000.00	30.2	23.6	20	1,817.10	0

ID	Static Demand (gpm)	Static Pressure (psi)	Fire-Flow Demand (gpm)	Residual Pressure (psi)	Minimum System Pressure (psi)	Critical Available Node ID	Design Flow (gpm)	Fire Flow Deficit (gpm)
J1043	1.1	34.7	1,000.00	32.6	20	16.8	2,571.50	0
J1044	1.1	34.5	1,000.00	32.4	20	16.9	2,545.70	0
J1045	1.1	32.8	1,000.00	30.5	20	17.7	2,365.20	0
J1046	1.1	33.9	1,000.00	31.4	20	17.6	2,360.90	0
J1047	1.1	30.2	1,000.00	27.8	20	20	2,245.60	0
J1048	1.1	31.7	1,000.00	29.5	20	18.7	2,354.30	0
J1049	1.1	31.2	1,000.00	29	20	20	2,497.30	0
J105	2.2	71.9	1,000.00	66.5	20	-5.3	2,376.70	0
J1050	1.1	32.5	1,000.00	28.9	24.4	20	1,985.50	0
J1051	1.1	39.1	1,000.00	33.1	25.5	20	1,890.10	0
J1053	1.1	35.1	1,000.00	31.7	22.8	20	2,273.10	0
J1054	1.1	37.2	1,000.00	33.6	24	18.9	2,291.20	0
J1055	1.1	37.1	1,000.00	31.6	24.8	20	1,875.60	0
J1056	1.1	45.8	1,000.00	36.8	25.4	20	1,780.40	0
J1057	1.1	39.8	1,000.00	30.9	20	20	1,548.80	0
J1058	1.1	45.5	1,000.00	41.5	29.3	14.8	2,351.40	0
J1059	1.1	67.8	1,000.00	61.2	53	12	2,351.40	0
J106	2.2	36.6	1,000.00	33.8	29.6	20	2,986.90	0
J1060	1.1	105.3	1,000.00	94.5	80.8	10.4	2,351.40	0
J1061	1.1	49.3	1,000.00	44.3	25.1	14.7	2,380.10	0
J1062	1.1	50.1	1,000.00	44.9	24	13.4	2,314.20	0
J1063	1.1	43.5	1,000.00	36.8	28.4	20	1,999.40	0
J1064	1.1	50.8	1,000.00	45.5	21.3	15.6	2,382.30	0
J1065	1.1	51.9	1,000.00	41.2	43.5	20	1,819.50	0
J1066	1.1	51.3	1,000.00	45.8	20	15.5	2,356.70	0
J1067	1.1	52.4	1,000.00	46.6	20	12.8	2,225.40	0
J1068	1.1	47.9	1,000.00	37.6	39.8	20	1,724.50	0
J1069	1.1	53	1,000.00	47.1	20	9.4	2,090.20	0
J107	2.2	51.2	1,000.00	44.6	24.4	17.9	2,413.80	0
J1070	1.1	52.9	1,000.00	47	20	10	2,104.10	0
J1071	1.1	42.5	1,000.00	26.2	29.6	20	1,194.10	0
J1072	1.1	50.8	1,000.00	44.9	20	16.7	2,309.00	0
J1073	1.1	64.2	1,000.00	57.9	35.7	0	1,817.90	0
J1074	1.1	65.4	1,000.00	58.9	21.1	-1.7	1,749.20	0
J1075	1.1	51.6	1,000.00	44.6	35.1	20	2,302.00	0
J1076	1.1	55.7	1,000.00	38.4	42	15.8	1,391.90	0
J1077	1.1	51.5	1,000.00	28.1	32.9	20	1,176.90	0
J1078	1.1	50.7	1,000.00	28	32.7	20	1,180.70	0
J1079	1.1	53.7	1,000.00	39.1	42.2	16.9	1,505.10	0
J108	2.2	43.7	1,000.00	36.4	20	20	2,017.20	0

ID	Static Demand (gpm)	Static Pressure (psi)	Fire-Flow Demand (gpm)	Residual Pressure (psi)	Minimum System Pressure (psi)	Critical Available Node ID	Design Flow (gpm)	Fire Flow Deficit (gpm)
J1080	1.1	62.3	1,000.00	55.8	20	-1.8	1,682.10	0
J1081	1.1	58.3	1,000.00	51.9	23.1	-0.8	1,643.30	0
J1082	1.1	57.3	1,000.00	51.3	29.3	-3.4	1,603.40	0
J1083	1.1	57.2	1,000.00	51.2	20	-2.8	1,632.40	0
J1086	1.1	34	1,000.00	21.4	20	20	1,061.20	0
J1087	1.1	53.6	1,000.00	47.4	20	4.7	1,712.50	0
J1088	1.1	48.8	1,000.00	43.1	23.9	9	1,792.70	0
J109	2.2	47.8	1,000.00	40.4	20	20	2,197.30	0
J1090	1.1	81.4	1,000.00	75	35	-12.5	1,814.80	0
J1091	1.1	81.1	1,000.00	74.7	31.5	-12.2	1,814.10	0
J1092	1.1	82.5	1,000.00	73	61.9	2.4	1,814.80	0
J1093	1.1	86.5	1,000.00	80.2	20	-19.5	1,777.30	0
J1094	1.1	87.2	1,000.00	80.8	54.3	-18.3	1,784.00	0
J1095	1.1	68.7	1,000.00	62.2	27	-6.9	1,697.20	0
J1096	1.1	68.7	1,000.00	60.5	50.4	2.1	1,697.20	0
J1097	1.1	70.8	1,000.00	53.4	57	18.4	1,697.20	0
J1098	1.1	83.7	1,000.00	75.7	50.9	-4	1,809.90	0
J1099	1.1	76.8	1,000.00	57.3	61.4	19	1,778.70	0
J11	2.2	35.4	1,000.00	34.5	28.5	19.8	6,221.80	0
J110	2.2	63.8	1,000.00	59.6	20	-3.2	2,617.90	0
J1100	1.1	75.8	1,000.00	54	58.5	20	1,674.20	0
J1101	1.1	94.7	1,000.00	86.2	67.8	-5.6	1,876.60	0
J1102	1.1	91.9	1,000.00	83	72.2	-2.2	1,876.60	0
J1103	1.1	90.4	1,000.00	81.2	60.5	0.3	1,896.80	0
J1104	1.1	87.7	1,000.00	76.7	62.9	6.8	1,876.60	0
J1105	1.1	87.8	1,000.00	75.6	60.5	9.2	1,876.60	0
J1106	1.1	96	1,000.00	89	48.6	-16.6	1,836.40	0
J1107	1.1	95	1,500.00	80.1	63.4	-15	1,832.20	0
J1108	1.1	100.1	1,000.00	82.9	86.4	12.6	1,836.40	0
J1109	1.1	96.1	1,000.00	89.5	35.3	-21.6	1,814.50	0
J1110	1.1	96.5	1,000.00	88.9	86.3	-14	1,814.50	0
J1111	1.1	92.5	1,000.00	36.3	82.5	20	1,149.60	0
J1112	1.1	97.2	1,000.00	87.5	64.5	-4	1,808.70	0
J1113	1.1	96	1,000.00	88	63.1	-11.2	1,811.70	0
J1114	1.4	96.9	1,000.00	87.3	75.5	-4.1	1,812.10	0
J1116	1.1	84.7	1,000.00	70.7	54.1	12	1,814.80	0
J1117	1.1	85.1	1,000.00	70	70.8	13.4	1,814.80	0
J1118	1.1	85.3	1,000.00	65.1	56.3	18.6	1,814.80	0
J1119	1.1	86.2	1,000.00	65.4	54.4	18.9	1,814.80	0
J1120	1.1	85.1	1,000.00	47.8	55.9	16.3	1,316.00	0

ID	Static Demand (gpm)	Static Pressure (psi)	Fire-Flow Demand (gpm)	Residual Pressure (psi)	Minimum System Pressure (psi)	Critical Available Node ID	Design Flow (gpm)	Fire Flow Deficit (gpm)
J1122	1.1	81.4	1,000.00	34.9	20	20	1,166.40	0
J1123	1.1	113.6	1,000.00	61.5	20	-2.1	1,166.40	0
J1127	1.1	114.9	1,000.00	90.6	52.6	15.5	1,814.80	0
J1128	1.1	122.2	1,000.00	91.8	98.1	18.2	1,814.80	0
J1129	1.1	105.6	1,000.00	74.6	81	20	1,746.10	0
J113	2.2	55.5	1,000.00	37.9	41.6	9.6	1,227.90	0
J1130	1.1	127.4	1,000.00	92.7	99.9	19.4	1,814.80	0
J1131	1.1	105.3	1,000.00	82.2	60.6	16.5	1,814.80	0
J1132	1.1	105.5	1,000.00	81	86.2	17.5	1,814.80	0
J1133	1.1	104.2	1,000.00	68.9	76.3	11.6	1,520.80	0
J1134	1.1	95.9	1,000.00	45.4	56	20	1,250.90	0
J1135	1.1	96.5	1,000.00	33.8	46.9	20	1,115.80	0
J1136	1.1	92.2	1,000.00	82.7	60.8	1.1	1,906.30	0
J1137	1.1	96.1	1,000.00	72.1	72.4	20	1,880.00	0
J1138	1.1	98.1	1,000.00	68.6	79.8	20	1,704.20	0
J1139	1.1	107.8	1,000.00	93.9	30.5	-14.6	1,741.50	0
J114	2.2	55.9	1,000.00	48.8	34.1	12	2,273.80	0
J1140	1.1	108.8	1,000.00	94.2	93.9	-11.9	1,746.70	0
J1141	1.1	110.8	1,000.00	73.1	87.8	20	1,616.10	0
J1142	1.1	99.4	1,000.00	86.6	72.5	-13.7	1,733.30	0
J1143	1.1	98.6	1,000.00	85.8	58.4	-13.6	1,733.10	0
J1144	1.1	85.7	1,000.00	74	35.4	-11.2	1,685.60	0
J1145	1.1	82.5	1,000.00	71	35.6	-9.5	1,683.30	0
J1147	1.1	63	1,000.00	48.4	30.2	4.8	1,410.60	0
J1148	1.1	62.8	1,000.00	48.8	31.6	3.2	1,410.60	0
J1149	1.1	65.6	1,000.00	53	37.7	0.4	1,500.10	0
J115	2.2	57.8	1,000.00	44.6	30.3	19.6	1,833.00	0
J1150	1.1	62.4	1,000.00	46.4	26.7	3.6	1,311.80	0
J1151	1.1	54.5	1,000.00	36.4	20	11.5	1,222.80	0
J1152	1.1	46	1,000.00	25.4	20	20	1,139.10	0
J1153	1.1	47.4	1,000.00	25.5	20	20	1,132.90	0
J1155	1.1	74.3	1,500.00	50.8	37.6	-3	1,678.40	0
J1156	1.1	76.6	1,500.00	51.2	28.6	-1.2	1,680.30	0
J1157	1.1	79.4	1,500.00	53	24.6	-1.6	1,682.30	0
J1158	1.1	79.9	1,500.00	50.5	45.4	3.7	1,698.10	0
J116	2.2	58.5	1,000.00	44.4	29.2	18.9	1,765.10	0
J1160	1.1	81.2	1,500.00	50.1	47.5	5.9	1,712.80	0
J1162	1.1	83.3	1,500.00	52.8	66.1	3.8	1,715.20	0
J1163	1.1	92.9	1,500.00	57.2	59.1	4.7	1,717.40	0
J1164	1.1	94	1,500.00	57.3	47.7	5.2	1,718.10	0

ID	Static Demand (gpm)	Static Pressure (psi)	Fire-Flow Demand (gpm)	Residual Pressure (psi)	Minimum System Pressure (psi)	Critical Available Node ID	Design Flow (gpm)	Fire Flow Deficit (gpm)
J1165	1.1	93	1,500.00	62.9	76.9	-3.2	1,719.50	0
J1167	1.1	94.8	1,500.00	67.3	28.7	-8.7	1,726.70	0
J1169	1.1	100.3	1,500.00	73.6	20	-14.1	1,732.80	0
J117	2.2	58.5	1,000.00	44	28.2	18.9	1,734.90	0
J1170	1.1	103.7	1,500.00	75.6	35.5	-13.5	1,732.50	0
J1173	1.1	81.6	1,000.00	74.8	40.1	-10.5	1,806.90	0
J1176	1.1	60.9	1,500.00	36.8	20	12.4	1,742.20	0
J1177	1.1	59.5	1,500.00	34.1	20	15.2	1,742.20	0
J1179	1.1	67.8	1,500.00	42.3	20	8.8	1,742.20	0
J118	2.2	59.6	1,000.00	38.3	42.7	18.4	1,393.60	0
J1180	1.1	64.3	1,500.00	39.90	20	10	1,742.20	0
J1181	1.1	48.4	1,000.00	39.2	34.7	10.5	1,400.10	0
J1182	1.1	48.8	1,000.00	39.2	33.4	11.2	1,401.70	0
J119	2.2	57.4	1,000.00	34.5	39.1	20	1,323.60	0
J12	2.2	35.1	1,000.00	33.8	31.9	20	4,367.30	0
J120	2.2	58	1,000.00	31.3	36.8	20	1,222.60	0
J121	2.2	59.5	1,000.00	26.7	33.4	20	1,111.90	0
J122	2.2	62.8	1,000.00	25.3	33.9	18	1,049.90	0
J13	2.2	36.1	1,000.00	34.1	30.6	20	3,383.20	0
J131	2.2	56.7	1,000.00	48.5	27.4	10.3	2,039.90	0
J132	2.2	56.4	1,000.00	48.1	26	10.4	2,015.50	0
J133	2.2	59.2	1,000.00	47.1	33	20	1,970.50	0
J134	2.2	48.3	1,000.00	36	21.7	18.5	1,569.90	0
J135	2.2	55.1	1,000.00	45.9	35.7	11.7	1,886.00	0
J136	2.2	46.8	1,000.00	28.4	32.1	20	1,240.50	0
J137	2.2	58	1,000.00	48.7	20	12.2	2,010.40	0
J138	2.2	57.4	1,000.00	47.2	35.7	12.7	1,890.10	0
J139	2.2	50.2	1,000.00	36.8	21.3	20	1,605.90	0
J140	2.2	50.7	1,000.00	31.7	35.5	20	1,313.30	0
J141	2.2	59.8	1,000.00	49.7	20	16.1	2,097.90	0
J142	2.2	55.4	1,000.00	41.40	28.8	20	1,707.60	0
J143	2.2	59.8	1,000.00	46.6	38.9	20	1,891.20	0
J144	2.2	62.5	1,000.00	52	20	15.6	2,108.50	0
J145	2.2	63.1	1,000.00	52.1	25.4	18.9	2,184.30	0
J146	2.2	63.5	1,000.00	59.3	20	-3	2,608.20	0
J147	2.2	63.2	1,000.00	51.9	36.5	20	2,185.60	0
J148	2.2	59.8	1,000.00	49.8	42.6	20	2,246.80	0
J149	2.2	58.5	1,000.00	50.8	36.2	18.6	2,538.40	0
J15	2.2	43.3	1,000.00	39.5	29.3	20	2,770.20	0
J150	2.2	57.1	1,000.00	36.5	40.6	20	1,395.60	0

ID	Static Demand (gpm)	Static Pressure (psi)	Fire-Flow Demand (gpm)	Residual Pressure (psi)	Minimum System Pressure (psi)	Critical Available Node ID	Design Flow (gpm)	Fire Flow Deficit (gpm)
J151	2.2	66.9	1,000.00	56.4	43.2	20	2,373.60	0
J152	2.2	66.7	2,500.00	30.9	39.7	14.1	2,462.00	38
J153	2.2	70.2	2,500.00	45.4	55.2	-1	2,398.70	101.3
J154	2.2	73.4	1,000.00	68.2	20	-8.8	2,381.20	0
J155	2.2	74.6	1,000.00	69.6	31.2	-12	2,376.30	0
J156	2.2	71.1	1,500.00	27.3	54.1	20	1,636.40	0
J16	2.2	45.5	1,000.00	39.5	32.1	20	2,227.60	0
J160	2.2	79.2	1,500.00	67.8	67.1	-7.9	2,306.10	0
J161	2.2	78.2	1,500.00	62.7	61.5	6	2,306.10	0
J164	2.2	76.9	1,500.00	63.3	62.4	4.2	2,386.20	0
J166	2.2	79.6	1,500.00	57.7	56	16.5	2,386.20	0
J167	2.2	81.7	1,000.00	76.3	54.1	-22.3	2,205.20	0
J168	2.2	81.1	1,000.00	75	50	-20.4	2,033.60	0
J169	2.2	82.9	1,000.00	74.8	53.8	1.8	2,205.00	0
J170	2.2	82	1,000.00	72.2	36	8.5	2,184.70	0
J171	2.2	84.2	1,000.00	73.5	53.4	9.9	2,159.00	0
J172	2.2	76.6	1,000.00	68.1	64.6	3.6	2,086.60	0
J173	2.2	75.9	1,000.00	68.2	32.7	-1.5	2,068.60	0
J174	2.2	78.2	1,000.00	67	69.2	11.8	2,086.60	0
J175	2.2	81.5	1,500.00	63.7	48	-1.9	1,933.80	0
J176	2.2	85.2	1,000.00	74.3	62.2	3.3	1,933.80	0
J177	2.2	89.6	1,000.00	79.2	42.9	-5.8	1,808.80	0
J178	2.2	89.6	1,000.00	79	67.3	-4.6	1,808.80	0
J179	2.2	96	1,000.00	82	66.1	3.5	1,808.80	0
J18	2.2	42.4	1,000.00	37	33.6	20	2,222.30	0
J180	2.2	97.2	1,000.00	82.1	64.6	5.8	1,808.80	0
J181	2.2	104.8	1,000.00	93.5	40.7	-17.2	1,685.20	0
J182	2.2	105.7	1,000.00	94.2	39.3	-18.1	1,673.50	0
J183	2.2	108.1	1,000.00	96.6	37.7	-20.7	1,649.90	0
J184	2.2	104.4	1,000.00	88.4	70	-1.2	1,649.90	0
J185	2.2	114.8	1,000.00	103.1	36.6	-30	1,576.80	0
J186	2.2	114	1,000.00	102.3	27.6	-30.2	1,568.20	0
J187	2.2	125.4	1,000.00	108.3	88.4	-5.3	1,685.20	0
J188	2.2	110.4	1,000.00	98.1	55.4	-24.7	1,550.60	0
J189	2.2	113.3	1,000.00	101.4	34.8	-30	1,552.00	0
J19	2.2	40.2	1,000.00	33.2	21.4	20	1,801.10	0
J190	2.2	111.6	1,000.00	97.3	81.2	-15.8	1,550.60	0
J191	2.2	99.5	1,000.00	86.8	24.5	-16.6	1,534.10	0
J192	2.2	97.8	1,000.00	85.1	20	-15.3	1,532.20	0
J193	2.2	68.2	2,500.00	27.8	34.4	16.5	2,484.40	15.6

ID	Static Demand (gpm)	Static Pressure (psi)	Fire-Flow Demand (gpm)	Residual Pressure (psi)	Minimum System Pressure (psi)	Critical Available Node ID	Design Flow (gpm)	Fire Flow Deficit (gpm)
J194	2.2	64.4	1,000.00	43.9	48.1	20	1,547.00	0
J195	2.2	65.3	1,000.00	31	38	20	1,169.50	0
J196	2.2	106.7	1,000.00	94.1	35.1	-21	1,547.40	0
J197	2.2	104.7	1,000.00	77.1	82.7	12.9	1,550.60	0
J198	2.2	96.6	1,000.00	68.8	74.4	15	1,534.10	0
J199	2.2	92.3	1,000.00	79.9	34.1	-12.8	1,537.80	0
J20	2.2	40.5	1,000.00	33.6	25	20	1,842.30	0
J200	2.2	90.7	1,000.00	78.4	20	-12.4	1,536.30	0
J2004	5.2	70.1	1,000.00	54.2	41.6	12.5	2,056.40	0
J2005	5.2	71.9	1,000.00	55.1	41.4	10.7	1,958.20	0
J2006	5.2	69.8	1,000.00	50.5	33.6	12.8	1,733.30	0
J2007	5.2	68.9	1,000.00	49.3	31.6	13.7	1,707.10	0
J2008	5.2	62.6	1,000.00	42.1	23.2	20	1,649.90	0
J2009	5.2	64.2	1,000.00	43.6	24.5	20	1,683.10	0
J201	2.2	91.2	1,000.00	77.4	20	-5.7	1,548.60	0
J2010	1.8	40.9	1,000.00	37.4	26.6	10.2	2,042.90	0
J2011	1.8	41.9	1,000.00	38.3	26.6	8.7	1,980.70	0
J2012	1.8	42.3	1,000.00	38.2	34.2	8.3	1,825.00	0
J2013	1.8	40.8	1,000.00	34.8	28.2	9.7	1,399.60	0
J2014	1.8	38.6	1,000.00	29.8	20	12	1,114.60	0
J2015	1.8	37.9	1,000.00	28.3	20	12.6	1,054.50	0
J2016	1.8	32.1	1,000.00	20.3	20	20	1,017.40	0
J2018	1.8	47.5	1,000.00	43.6	27.6	9.1	2,161.70	0
J2019	1.8	62.1	1,000.00	58.2	39.9	9.2	2,779.00	0
J202	2.2	113.6	1,000.00	99.9	42.2	-19.4	1,555.60	0
J2020	1.8	63.2	1,000.00	59.4	35	9.3	2,850.60	0
J2021	1.8	60.6	1,000.00	51.9	46.7	19.5	2,385.50	0
J2022	1.8	52.7	1,000.00	42.2	20	16.5	1,769.20	0
J2023	1.8	45.1	1,000.00	35	20	20	1,682.10	0
J2024	1.8	50.5	1,000.00	40.9	20	16.3	1,794.30	0
J2025	1.8	57.5	1,000.00	48.2	20	10.7	1,862.00	0
J2026	1.8	61.8	1,000.00	53	23	7.7	1,945.30	0
J2027	1.8	66.7	1,000.00	58.6	35	4.5	2,098.70	0
J2028	1.8	65.7	1,000.00	57.5	47.9	6.3	2,098.70	0
J2029	1.8	70	1,000.00	62.2	20	2	2,159.80	0
J203	2.2	83	1,000.00	71.3	39.3	-10.6	1,516.40	0
J2030	1.8	65.7	1,000.00	56.8	32.4	13.3	2,239.90	0
J2031	1.8	73.8	1,000.00	66.6	48.3	-1	2,263.30	0
J2032	1.8	73.4	1,000.00	65.9	52.9	0.8	2,256.20	0
J2033	1.8	68.7	1,000.00	60.3	36	9	2,248.80	0

ID	Static Demand (gpm)	Static Pressure (psi)	Fire-Flow Demand (gpm)	Residual Pressure (psi)	Minimum System Pressure (psi)	Critical Available Node ID	Design Flow (gpm)	Fire Flow Deficit (gpm)
J2034	1.8	68.1	1,000.00	58.5	47.3	14.4	2,248.80	0
J2035	1.8	65.8	1,000.00	54.9	41.9	19.6	2,248.80	0
J2036	1.8	70.6	1,000.00	60.5	48.6	14.8	2,256.20	0
J2037	1.8	75.2	1,000.00	68.4	52.8	-2	2,373.30	0
J2038	1.8	78.2	1,000.00	72.1	34.3	-4.8	2,525.90	0
J2039	1.8	78.4	1,000.00	72.2	53.3	-4	2,534.60	0
J204	2.2	83.1	1,000.00	71.6	20.4	-12.5	1,509.20	0
J2040	1.8	78.3	1,000.00	71.3	54.1	3.8	2,581.10	0
J2041	1.8	78.3	1,000.00	71	52	6.1	2,597.60	0
J2042	1.8	78.1	1,000.00	73.4	26.3	-5.6	2,999.50	0
J2043	1.8	78.3	2,500.00	42.4	50.3	7.7	2,610.30	0
J2044	1.8	71	1,000.00	61.3	49.1	20	2,575.00	0
J2045	1.8	70.9	1,000.00	61.9	54.4	20	2,682.50	0
J2046	1.8	78.3	1,000.00	74	37.7	-8.2	3,084.00	0
J2047	1.8	84.4	1,000.00	73	67.3	19.4	2,644.40	0
J2048	1.8	94.8	1,000.00	81.1	67.7	20	2,596.10	0
J2049	1.8	96.5	1,000.00	82.2	64.4	20	2,562.30	0
J205	2.2	85.6	1,000.00	73.7	43.4	-11.6	1,517.40	0
J2050	1.8	91.1	1,000.00	78.6	69.8	20	2,661.30	0
J2051	1.8	85.2	1,000.00	76	60.7	15.5	2,793.20	0
J2052	1.8	85.6	1,000.00	75.6	70.3	17.9	2,795.10	0
J2053	1.8	95	1,000.00	82.8	64.7	20	2,794.10	0
J2054	1.8	95.4	1,000.00	83.2	66.2	20	2,807.30	0
J2055	1.8	84.6	1,000.00	78.3	78.3	1.6	2,839.10	0
J2056	1.8	85	1,000.00	79.2	28.2	-3.1	2,841.10	0
J2057	1.8	85.2	1,000.00	79.3	36.2	-2.8	2,841.10	0
J2058	1.8	84.4	1,000.00	78.7	20	-3.3	2,841.20	0
J2059	1.8	84.5	1,000.00	78.4	58.5	-0.2	2,841.50	0
J206	2.2	82.3	1,000.00	68.9	53.9	-3.2	1,517.40	0
J2060	1.8	82.7	1,000.00	76.4	40.2	2.9	2,841.70	0
J2061	1.8	80.9	1,000.00	74.9	56.3	1.9	2,842.00	0
J2062	1.8	80.5	1,000.00	75.1	20	-3.1	2,841.80	0
J2063	1.8	80	1,000.00	74.5	25.1	-3.4	2,842.10	0
J2064	1.8	79.3	1,000.00	74	20	-3.6	2,842.50	0
J2065	1.8	79.6	1,000.00	74.1	51.9	-2.9	2,842.50	0
J2066	1.8	79.1	1,000.00	73.7	20	-3.5	2,843.30	0
J2067	1.8	67.8	1,000.00	58	46.5	15.2	2,338.60	0
J2068	1.8	62.9	1,000.00	43.6	47.5	20	1,558.50	0
J2069	1.8	85.5	1,000.00	79.2	32.2	0.7	2,841.10	0
J207	2.2	65.7	1,000.00	55.1	20	-5.9	1,426.10	0

ID	Static Demand (gpm)	Static Pressure (psi)	Fire-Flow Demand (gpm)	Residual Pressure (psi)	Minimum System Pressure (psi)	Critical Available Node ID	Design Flow (gpm)	Fire Flow Deficit (gpm)
J2070	1.8	86.8	1,000.00	76.9	78.9	18	2,841.10	0
J2071	1.8	91	1,000.00	68.8	73.4	20	1,909.90	0
J2072	1.8	84.1	1,000.00	77.5	27.8	3.9	2,841.10	0
J2073	1.8	84.1	1,000.00	76	66.6	12.6	2,841.10	0
J2074	1.8	83.7	1,000.00	76.8	69	6.2	2,841.10	0
J2075	1.8	74.9	1,000.00	61.4	45.1	20	2,206.80	0
J2076	1.8	89.3	1,000.00	80.4	70	13.6	2,841.10	0
J2077	1.8	93	1,000.00	82.2	69.3	18.2	2,841.10	0
J2078	1.8	76.8	1,000.00	73	43.5	7.4	3,218.70	0
J2079	1.8	76.4	1,000.00	72.7	22.4	7.1	3,222.00	0
J208	2.2	70.1	1,000.00	59.4	20	-7.8	1,458.90	0
J2080	1.8	74.5	1,000.00	70.9	43.1	6.8	3,244.60	0
J2081	1.8	73.6	1,000.00	70	33.8	7.4	3,229.60	0
J2082	1.8	73.6	1,000.00	70	49	7.1	3,190.30	0
J2083	1.8	73.9	1,000.00	70.1	63.7	8.9	3,231.70	0
J2084	1.8	73.5	1,000.00	69.8	37.4	8.5	3,242.90	0
J2085	1.8	70	1,000.00	65.9	20.5	12.1	3,241.90	0
J2086	1.8	69	1,000.00	64.2	36	6.7	3,119.60	0
J2087	1.8	66.2	1,000.00	61.6	46.4	1.5	2,934.70	0
J2088	1.8	65.4	1,000.00	60.6	55.2	2.2	2,836.90	0
J2089	1.8	67.1	1,000.00	62.7	51.6	1.7	3,104.20	0
J209	2.2	69.1	1,000.00	58.3	20	-6.9	1,453.70	0
J2090	1.8	68.1	1,000.00	63.9	20	0.8	3,148.90	0
J2091	1.8	47.7	1,000.00	39.7	30.3	20	2,049.20	0
J2092	1.8	77.9	1,000.00	71.9	47	-1.3	2,663.00	0
J2093	1.8	77.8	1,000.00	72.6	20	-3.6	2,865.50	0
J2094	1.8	78.4	1,000.00	73.1	51.9	-3.6	2,831.70	0
J2095	1.8	78.1	1,000.00	72.8	20	-3.7	2,848.20	0
J2096	1.8	84.8	1,000.00	81.7	60.8	16.4	3,191.50	0
J2097	1.8	85.4	1,000.00	81.5	77.2	17.6	3,191.50	0
J2098	1.8	88.9	1,000.00	84	78.4	18.4	3,191.50	0
J2099	1.8	84.8	1,000.00	79.6	73.7	18.8	3,191.50	0
J21	2.2	45	1,000.00	36.2	25.3	20	1,783.40	0
J210	2.2	69.2	1,000.00	58.7	22.1	-7.2	1,470.40	0
J2100	1.8	92.7	1,000.00	90.2	77.3	12.5	2,923.80	0
J2101	1.8	93	1,000.00	90.6	55.6	11.3	2,873.30	0
J2102	1.8	90.8	1,000.00	86.9	76.5	16.9	3,000.30	0
J2103	1.8	91.8	1,000.00	89.5	60.5	10.2	2,787.50	0
J2104	1.8	91.4	1,000.00	89.1	46.2	10.1	2,779.30	0
J2105	1.8	88.4	1,000.00	86.1	44.1	10.4	2,762.00	0

ID	Static Demand (gpm)	Static Pressure (psi)	Fire-Flow Demand (gpm)	Residual Pressure (psi)	Minimum System Pressure (psi)	Critical Available Node ID	Design Flow (gpm)	Fire Flow Deficit (gpm)
J2106	1.8	85.4	1,000.00	83.2	44.5	10.1	2,691.30	0
J2107	1.8	83.6	1,000.00	81.4	44.3	10.3	2,673.80	0
J2108	1.8	72.1	1,000.00	67	61.9	19.2	3,018.10	0
J2109	1.8	63	1,000.00	57.6	48.9	19.8	3,122.30	0
J211	2.2	71.4	1,000.00	61.2	20	-10.2	1,483.60	0
J2110	1.8	64.4	1,000.00	50.8	53.6	20	1,937.00	0
J2111	1.8	60.7	1,000.00	55.3	43.9	20	3,167.90	0
J2112	1.8	60.9	1,000.00	54.8	51.2	20	2,975.80	0
J2113	1.8	54.1	1,000.00	46	39.1	20	2,273.20	0
J2114	1.8	51.5	1,000.00	42.6	31.4	20	2,056.90	0
J2115	1.8	47.1	2,500.00	2.7	26.8	20	1,895.90	604.1
J2116	1.8	46.3	2,500.00	8.4	32.5	20	2,032.00	468
J2118	1.8	45.8	2,500.00	12.4	20	20	2,159.70	340.3
J212	2.2	75	1,000.00	63.8	32.7	-10.9	1,437.70	0
J2120	1.8	50.6	2,500.00	15.5	20	17.8	2,202.40	297.6
J2121	1.8	48	2,500.00	13.5	20	19.5	2,194.30	305.7
J2122	1.8	51.5	2,500.00	17.6	20	16.3	2,217.30	282.7
J2123	1.8	56.4	2,500.00	22.5	20	13.4	2,278.90	221.1
J2124	1.8	50.1	2,500.00	15.9	20	17.6	2,209.50	290.5
J2126	1.8	56.2	2,500.00	23.4	20	11.5	2,240.80	259.2
J2128	1.8	76.3	2,500.00	47.7	54.3	-9.5	2,359.20	140.8
J2129	1.8	92	1,000.00	86.9	49.4	-22	2,724.20	0
J213	2.2	82.5	1,000.00	73.3	50.5	-21.2	1,568.40	0
J2130	1.8	91.5	1,000.00	85.9	66.1	-8.2	2,896.80	0
J2131	1.8	90.2	1,000.00	84.4	61.8	-2	3,001.10	0
J2132	1.8	90.4	1,000.00	84.5	61.3	-0.9	3,027.20	0
J2133	1.8	85.4	1,000.00	79.3	51.9	7.8	3,194.60	0
J2134	1.8	88.4	1,000.00	82	46.3	13.8	3,554.60	0
J2135	1.8	88.7	1,000.00	82.2	47	16	3,719.30	0
J2137	1.8	88.7	1,000.00	82.2	51.9	18.5	3,973.00	0
J2138	1.8	86.8	1,000.00	78.6	69.3	20	3,419.40	0
J2139	1.8	86.9	1,000.00	76.3	63.8	20	2,888.20	0
J214	2.2	46.6	1,000.00	31.9	20	14.8	1,226.30	0
J2141	1.8	60.6	1,000.00	54.1	49.4	20	2,817.60	0
J2142	1.8	60.7	1,000.00	52.8	43.3	13.9	2,293.80	0
J2143	1.8	54.6	1,000.00	34.9	39	20	1,364.40	0
J2144	1.8	61.1	1,000.00	53	40.5	19.8	2,459.70	0
J2145	1.8	61.3	1,000.00	53.1	39.5	20	2,466.90	0
J2146	1.8	62.1	1,000.00	54.3	45.3	16.1	2,415.60	0
J2147	1.8	58.2	1,000.00	39.5	43.4	20	1,479.80	0

ID	Static Demand (gpm)	Static Pressure (psi)	Fire-Flow Demand (gpm)	Residual Pressure (psi)	Minimum System Pressure (psi)	Critical Available Node ID	Design Flow (gpm)	Fire Flow Deficit (gpm)
J2148	1.8	60.3	1,000.00	54.2	50.6	18.1	2,243.90	0
J2149	1.8	49.7	1,000.00	46.1	37.4	14.7	1,989.90	0
J215	2.2	45	1,000.00	30.2	20	16.2	1,224.60	0
J2150	1.8	47.3	1,000.00	43.9	36	14.7	1,972.00	0
J2151	1.8	44.6	1,000.00	41.4	34.4	14.7	1,951.50	0
J2152	1.8	54.4	1,000.00	46.2	35.9	19	1,951.50	0
J2153	1.8	82.9	3,000.00	69.4	67.3	18.6	5,215.50	0
J2154	1.8	83.2	3,000.00	70.3	65.9	18.7	5,287.30	0
J2156	1.8	80.7	3,000.00	64.1	68.2	11.7	5,138.10	0
J2157	1.8	81.9	1,000.00	77.2	61.6	-0.2	4,900.70	0
J2158	1.8	75.3	1,000.00	70.2	51.1	6.4	4,541.00	0
J2159	1.8	74.8	1,000.00	69.2	65.5	6.9	4,156.00	0
J216	2.2	39.4	1,000.00	25.9	20	19.7	1,235.80	0
J2160	1.8	61.7	1,000.00	51.6	42.1	20	2,525.10	0
J2161	1.8	62.9	1,000.00	57.1	31.6	19.1	4,051.90	0
J2162	1.8	62	1,000.00	55.9	51.5	20	3,839.80	0
J2163	1.8	80.5	1,000.00	66.9	53.1	20	2,516.90	0
J2164	1.8	89.3	1,000.00	69.5	47.6	20	2,107.20	0
J2165	1.8	83.2	1,000.00	75.6	33.1	3.5	3,399.10	0
J2166	1.8	66.8	1,000.00	58.4	20	20	3,163.60	0
J2168	1.8	23.6	1,000.00	22.6	20	20	2,166.30	0
J2169	1.8	24.3	1,000.00	22.7	20	20	1,807.70	0
J217	2.2	39.4	1,000.00	26.3	20	19.3	1,239.20	0
J2174	1.8	43.3	1,000.00	40.4	20	20	3,836.20	0
J2175	1.8	44.6	1,000.00	41.7	36.8	20	3,839.60	0
J2176	1.8	42.7	1,000.00	33.6	26.6	20	1,675.00	0
J2177	1.8	41.1	1,000.00	30.7	20	20	1,489.50	0
J2178	1.8	41.6	1,000.00	31	20	18.5	1,439.40	0
J2179	1.8	40	1,000.00	21.8	25.5	20	1,054.70	0
J218	2.2	39.5	1,000.00	26.1	20	19	1,218.20	0
J2180	1.8	35.6	1,000.00	27.8	20	20	2,216.80	0
J2181	1.8	56.2	1,000.00	49.1	20.8	3.5	2,432.20	0
J2182	1.8	56.6	1,000.00	47.7	54.1	16.5	2,519.00	0
J2183	1.8	63.4	1,000.00	42.3	52.1	20	1,493.60	0
J2184	1.8	64.3	1,000.00	42.8	51.9	20	1,497.40	0
J2185	1.8	65.9	1,000.00	44.2	52.3	20	1,520.70	0
J2186	1.8	58.2	1,000.00	48.5	42.7	20	2,586.10	0
J2187	1.8	62.2	1,000.00	50.7	37.4	20	2,294.20	0
J2188	1.8	64.2	1,000.00	51.6	45.7	20	2,178.50	0
J2189	1.8	69.1	1,000.00	53.8	41.4	20	1,996.50	0

ID	Static Demand (gpm)	Static Pressure (psi)	Fire-Flow Demand (gpm)	Residual Pressure (psi)	Minimum System Pressure (psi)	Critical Available Node ID	Design Flow (gpm)	Fire Flow Deficit (gpm)
J219	2.2	38.5	1,000.00	24.9	20	20	1,203.40	0
J2190	1.8	87.2	1,000.00	70.2	48.5	19.6	2,243.10	0
J2191	1.8	91.8	1,000.00	74.4	46.6	14.6	2,203.50	0
J2192	1.8	86.4	1,000.00	61.7	66.8	20	1,742.30	0
J2194	1.8	93.1	1,000.00	75.8	48.5	12.8	2,150.10	0
J2195	1.8	95.6	1,000.00	78.8	58.7	0.4	1,979.70	0
J2196	1.8	95.9	1,000.00	79.3	37.2	-4.5	1,926.00	0
J2197	1.8	93.8	1,000.00	67.2	73.2	-2.4	1,447.00	0
J2198	1.8	94.7	1,000.00	66.4	72.7	-3.4	1,397.10	0
J2199	1.8	88.5	1,000.00	55.8	62.7	2.8	1,287.40	0
J220	2.2	43.3	1,000.00	30.8	20	15.7	1,285.30	0
J2200	1.8	72.6	1,000.00	24.8	34.8	18.8	1,041.60	0
J2202	1.8	95.6	1,000.00	48.4	58.5	19	1,290.40	0
J2203	1.8	94.6	1,000.00	43.3	54.1	20	1,231.80	0
J2204	1.8	94.8	1,000.00	36.4	48.5	20	1,147.40	0
J2205	1.8	94.6	1,000.00	78.4	20	-1.2	1,983.60	0
J2206	1.8	96.7	1,000.00	81.2	69	0.1	2,094.70	0
J2207	1.8	95.2	1,000.00	83.2	78.9	8.8	2,659.70	0
J2208	1.8	88.1	1,000.00	66.7	71.1	18.3	1,891.40	0
J2209	1.8	86.4	1,000.00	37	77.3	20	1,177.80	0
J221	2.2	43.3	1,000.00	31	20	15.6	1,297.90	0
J2210	1.8	97.7	1,000.00	90.3	64.5	6.8	3,745.60	0
J2211	1.8	97.8	1,000.00	88.4	82.6	20	3,533.80	0
J2212	1.8	96.7	1,000.00	86.1	76.9	18.9	3,195.30	0
J2213	1.8	95.6	1,000.00	77.6	81.2	20	2,239.70	0
J2214	1.8	95.2	1,000.00	88.5	65	12.6	3,775.00	0
J2215	1.8	93.2	1,000.00	86.7	65.1	12.9	3,795.50	0
J2216	1.8	83.8	1,000.00	54.5	70.4	20	1,538.90	0
J2217	1.8	88	1,000.00	82	65.3	1.7	3,838.70	0
J2218	1.8	87.6	1,000.00	81.7	65.4	1	3,825.20	0
J2219	1.8	76.7	1,000.00	-18.2	59.8	11.9	695.30	304.7
J222	2.2	48.2	1,000.00	34.5	20	12.4	1,257.50	0
J2221	1.8	77.8	1,000.00	72.8	52	13.8	4,033.60	0
J2222	1.8	77.3	1,000.00	63.9	72.3	20	2,291.40	0
J2223	1.8	72.3	1,000.00	56.2	64.7	20	1,939.10	0
J2224	1.8	70.8	1,000.00	56.2	53.2	20	2,021.10	0
J2225	1.8	73.9	1,000.00	65	71.2	20	2,954.60	0
J2226	1.8	74.2	1,000.00	67.6	50.8	20	3,713.90	0
J2228	1.8	89.2	1,000.00	77.5	58.2	18.4	2,768.20	0
J2229	1.8	85.2	1,000.00	73.6	55	20	2,709.20	0

ID	Static Demand (gpm)	Static Pressure (psi)	Fire-Flow Demand (gpm)	Residual Pressure (psi)	Minimum System Pressure (psi)	Critical Available Node ID	Design Flow (gpm)	Fire Flow Deficit (gpm)
J223	2.2	44.7	1,000.00	31.3	20	16.1	1,291.20	0
J2230	1.8	79.3	1,000.00	70	64.6	20	2,948.40	0
J2231	1.8	79.1	1,000.00	71.5	64.2	20	3,360.50	0
J2232	1.8	73.7	1,000.00	49.1	58.3	20	1,543.70	0
J2233	1.8	73.9	1,000.00	49.5	59.9	20	1,553.90	0
J2234	1.8	82.6	1,000.00	-42.1	60.4	20	688.90	311.1
J2235	1.8	82.9	1,000.00	77.4	75.6	19.7	3,873.40	0
J2236	1.8	83.1	1,000.00	78.3	65.2	19.1	3,802.00	0
J2237	1.8	72	1,000.00	67.4	46.2	15.5	4,190.40	0
J2238	1.8	71.3	1,000.00	66.7	46.3	16	4,208.80	0
J2239	1.8	65.9	1,000.00	50.2	49	20	1,826.50	0
J224	2.2	47.3	1,000.00	31.8	20	17.3	1,291.20	0
J2240	1.8	63.9	1,000.00	42.9	54.2	20	1,505.80	0
J2241	1.8	53.7	1,000.00	45.3	33.3	20	2,551.10	0
J2242	1.8	51.9	1,000.00	44.4	28.9	19.7	2,456.10	0
J2243	1.8	51	1,000.00	43.4	32.6	20	2,399.70	0
J2244	1.8	48.5	1,000.00	41.6	36	20	2,319.00	0
J2245	1.8	79.9	1,000.00	76.1	67.3	18.1	3,611.30	0
J2246	1.8	64.6	1,000.00	60.4	42.1	19.8	4,221.60	0
J2247	1.8	63.3	1,000.00	52.7	60.1	20	2,229.90	0
J2248	1.8	79.5	1,000.00	76.5	50.1	16.4	3,359.90	0
J2249	1.8	79.1	1,000.00	76.1	68.1	16.6	3,394.10	0
J225	2.2	45	1,000.00	27.9	20	20	1,251.70	0
J2250	1.8	75	1,000.00	71.8	61	17.5	3,581.30	0
J2251	1.8	58.6	1,000.00	54.7	48.6	19.9	4,215.00	0
J2252	1.8	57.8	1,000.00	54.4	40	19.6	4,302.80	0
J2253	1.8	56.6	1,000.00	53.2	39.1	19.7	4,303.30	0
J2254	1.8	56.3	1,000.00	52.2	42.7	20	3,985.40	0
J2255	1.8	53.4	1,000.00	49.7	34.3	15.2	3,891.40	0
J2256	1.8	47.7	1,000.00	43.3	34.3	20	3,204.30	0
J2257	1.8	52.4	1,000.00	49.6	20	19.5	4,546.50	0
J2258	1.8	52.1	1,000.00	49.2	41.9	19.7	4,595.90	0
J2259	1.8	49.3	1,000.00	46.3	36.4	20	4,374.30	0
J226	2.2	46.6	1,000.00	33.5	20	14.3	1,305.00	0
J2260	1.8	54.5	1,000.00	51.2	36.2	19.8	4,414.80	0
J2261	1.8	56.3	1,000.00	53.1	44.5	19.5	4,296.60	0
J2262	1.8	56.2	1,000.00	53.2	31.3	19.3	4,284.70	0
J2263	1.8	59.8	1,000.00	56.2	39	19.6	3,987.00	0
J2264	1.8	55.7	1,000.00	52.6	41.3	19.4	4,238.30	0
J2265	1.8	44	1,000.00	41.1	30.6	20	3,858.80	0

ID	Static Demand (gpm)	Static Pressure (psi)	Fire-Flow Demand (gpm)	Residual Pressure (psi)	Minimum System Pressure (psi)	Critical Available Node ID	Design Flow (gpm)	Fire Flow Deficit (gpm)
J2266	1.8	46.3	1,000.00	43	36.3	20	3,790.80	0
J2267	1.8	85.5	1,000.00	80.7	78.5	18.5	3,059.00	0
J2268	1.8	84.5	1,000.00	78.3	79.6	19.2	3,059.00	0
J2269	1.8	94.9	1,000.00	88	79.7	18.6	2,819.50	0
J227	2.2	47.8	1,000.00	34.9	20	13.1	1,310.10	0
J2270	1.8	95	1,000.00	88.1	78.4	18.6	2,791.10	0
J2271	1.8	97.5	1,000.00	83.6	86.5	20	2,618.60	0
J2272	1.8	95.2	1,000.00	89.1	84.4	17.7	2,612.70	0
J2273	1.8	97.2	1,000.00	83.2	86.1	20	2,595.30	0
J2274	1.8	97.9	1,000.00	78.9	82.9	20	2,192.90	0
J2275	1.8	95.2	1,000.00	89.7	86.5	17	2,576.00	0
J2276	1.8	94.9	1,000.00	90.6	89.2	15.4	2,527.20	0
J2277	1.8	94.7	1,000.00	91.1	90.4	13.9	2,510.30	0
J2278	1.8	94.9	1,000.00	92.2	64	9.5	2,488.80	0
J2279	1.8	88.9	1,000.00	86.3	38.1	10.3	2,487.60	0
J228	2.2	53.5	1,000.00	41	20	7.5	1,324.20	0
J2280	1.8	85.4	1,000.00	82.9	42.1	10.5	2,487.10	0
J2281	1.8	77.6	1,000.00	75.1	44	11	2,488.80	0
J2282	1.8	72.9	1,000.00	70.6	44	10.9	2,491.80	0
J2285	1.8	68.2	1,000.00	65.9	25.3	12.1	2,514.40	0
J2286	1.8	93.9	1,000.00	91.1	82.1	10.6	2,479.40	0
J2287	1.8	82.5	1,000.00	53.2	70.4	20	1,518.90	0
J2288	1.8	79.4	1,000.00	47.3	64.3	20	1,401.90	0
J2289	1.8	62.7	1,000.00	59.2	41.5	18.1	2,923.70	0
J229	2.2	61.2	1,000.00	49.3	20	-0.8	1,342.30	0
J2290	1.8	62.8	1,000.00	59.4	46.4	17.4	2,760.30	0
J2291	1.8	62.7	1,000.00	59.3	47.2	17.3	2,736.90	0
J2292	1.8	55.2	1,000.00	41.9	44.8	16.3	1,630.50	0
J2293	1.8	53.9	1,000.00	39.3	42.3	20	1,609.70	0
J2296	1.8	59.9	1,000.00	57.9	54.9	10.9	2,459.30	0
J2297	1.8	56.6	1,000.00	50.4	44.9	20	2,816.10	0
J2298	1.8	58.1	1,000.00	51.5	43.1	20	2,764.60	0
J2299	1.8	60.3	1,000.00	53.8	46.6	20	2,886.70	0
J23	2.2	34.9	1,000.00	31.2	21.3	20	2,190.90	0
J230	2.2	54	1,000.00	42.1	20	6.1	1,343.10	0
J2300	1.8	60.3	1,000.00	57.1	36.7	19.4	3,990.70	0
J2301	1.8	58.8	1,000.00	55.5	41.6	8.5	3,791.50	0
J2302	1.8	50.2	1,000.00	44.4	38	17.1	2,498.70	0
J2303	1.8	47.3	1,000.00	40.2	31.9	20	2,180.50	0
J2304	1.8	60.2	1,000.00	56.9	44.4	8.8	3,926.80	0

ID	Static Demand (gpm)	Static Pressure (psi)	Fire-Flow Demand (gpm)	Residual Pressure (psi)	Minimum System Pressure (psi)	Critical Available Node ID	Design Flow (gpm)	Fire Flow Deficit (gpm)
J2308	1.8	80.5	3,000.00	56.5	70.6	20	4,775.30	0
J2309	1.5	76.7	1,500.00	70.1	55.7	17.4	5,371.60	0
J231	2.2	53.3	1,000.00	41.5	20	6.5	1,343.20	0
J2310	1.8	78.9	3,500.00	53.7	63.2	17.7	5,043.40	0
J2311	1.8	79.7	3,500.00	57.9	67.3	17.3	5,166.50	0
J2312	1.8	79.2	1,000.00	74.3	59.4	17.8	4,908.30	0
J2313	1.8	81.1	3,000.00	58.6	58.3	17.5	4,699.20	0
J2314	1.8	79.5	3,000.00	57.8	61.2	17.1	4,469.70	0
J2315	1.8	75.9	3,000.00	56.1	61.6	16.5	4,245.60	0
J2316	1.8	73.6	3,000.00	55.3	61.3	16.1	4,123.90	0
J2317	1.8	79.4	3,000.00	48.6	68.8	19	4,123.90	0
J2318	1.8	73.7	3,000.00	60.3	66.3	13	3,886.10	0
J2319	1.8	75	3,000.00	65.6	70.2	8.8	3,821.00	0
J232	2.2	55.3	1,000.00	43.7	20	4	1,350.20	0
J2320	1.8	75.6	3,000.00	70.1	59.9	1.4	3,715.60	0
J2321	1.8	74.5	3,000.00	69	54.6	1.5	3,478.10	0
J2322	1.8	74	3,000.00	68.9	51.5	1	3,388.80	0
J2324	1.8	70.8	3,000.00	65.8	56.1	1	3,153.00	0
J2325	1.8	77	3,000.00	67	67.6	8.9	3,547.40	0
J2326	1.8	79.4	3,000.00	74.2	66.2	-1.5	3,947.80	0
J2327	1.8	79.4	3,000.00	74.1	70.3	-0.7	4,211.10	0
J2328	1.8	79.7	3,000.00	74.1	74.6	12.3	4,184.70	0
J2329	1.8	80.4	3,000.00	71.1	74.9	15.7	4,151.90	0
J233	2.2	56.1	1,000.00	44.6	20	3	1,353.70	0
J2330	1.8	67	3,000.00	56	52	17	3,741.60	0
J2331	1.8	74.4	3,000.00	63.6	65.4	16	3,677.80	0
J2332	1.8	75.6	3,000.00	66.4	69.5	14.8	3,661.30	0
J2333	1.8	63	3,000.00	46.7	50.9	18.8	3,703.00	0
J2334	1.8	65.2	3,000.00	31.3	54.1	20	3,523.10	0
J2335	1.8	69.3	3,000.00	26.7	55.7	20	3,256.70	0
J2336	1.8	70.6	3,000.00	22.8	55.3	20	3,095.30	0
J2337	1.8	75.6	3,000.00	67.7	50.3	13.3	3,659.60	0
J2338	1.8	77	3,000.00	68.4	62.1	13.4	3,577.40	0
J2339	1.8	77.7	3,000.00	69	60.9	13.3	3,533.90	0
J234	2.2	77.8	1,000.00	65.9	20	-13.2	1,391.30	0
J2340	1.8	77	3,000.00	68.5	60	14.1	3,763.60	0
J2341	1.8	77.2	3,000.00	68.6	59.6	14.2	3,773.30	0
J2342	1.8	78.2	3,000.00	69.7	61	14.2	3,848.10	0
J2343	1.8	78.8	3,000.00	70.6	65	13.9	3,902.80	0
J2344	1.8	78.5	3,000.00	71	68.3	13.2	3,947.30	0

ID	Static Demand (gpm)	Static Pressure (psi)	Fire-Flow Demand (gpm)	Residual Pressure (psi)	Minimum System Pressure (psi)	Critical Available Node ID	Design Flow (gpm)	Fire Flow Deficit (gpm)
J2345	1.8	77.7	3,000.00	72.1	54.6	10.5	4,083.40	0
J2346	1.8	76	3,000.00	65.3	69.4	16	3,886.60	0
J2347	1.8	45.5	3,000.00	32.3	35.2	19.5	3,803.60	0
J2348	1.8	56.4	3,000.00	42.3	43.4	18.7	3,739.20	0
J2349	1.8	78	3,000.00	64.3	66.3	16.5	3,595.50	0
J235	2.2	83.6	1,000.00	76.1	50.6	-9	2,033.60	0
J2350	1.8	78.6	3,000.00	66.8	61.7	15.4	3,495.00	0
J2351	1.8	78.5	3,000.00	66.2	66.6	15.6	3,491.00	0
J2352	1.8	75.4	3,000.00	58.5	63.4	17.2	3,388.90	0
J2353	1.8	76.1	3,000.00	58.4	62.8	17.3	3,370.30	0
J2354	1.8	75.9	3,000.00	57.6	61.2	17.5	3,347.20	0
J2355	1.8	75.2	3,000.00	56.1	58	17.6	3,306.40	0
J2356	1.8	77.7	3,000.00	66.8	69.9	15	3,493.50	0
J2357	1.8	77.5	3,000.00	68.3	66.8	13.8	3,504.60	0
J2358	1.8	74.6	3,000.00	64.2	59.1	14.7	3,427.80	0
J2359	1.8	73.6	3,000.00	60.5	63.4	15.9	3,313.80	0
J236	2.2	73.8	1,000.00	63.7	20	-11.6	1,504.10	0
J2360	1.8	67.3	1,000.00	65	56.2	13.2	2,838.40	0
J2361	1.8	73.1	3,000.00	59	59	15.8	3,135.10	0
J2363	1.8	76.8	3,000.00	70.1	63.4	13.1	4,285.60	0
J2364	1.8	74.7	3,000.00	60.4	69.7	18.2	4,285.60	0
J2365	1.8	78.2	3,000.00	71.9	67.4	12.1	4,147.80	0
J2367	1.8	76.9	3,000.00	68.3	72.7	14.8	4,499.70	0
J2368	1.8	77.2	3,000.00	67.1	72	16	4,589.60	0
J2369	1.8	77	3,000.00	64.6	72.5	17.5	4,589.60	0
J237	2.2	76.3	1,000.00	64.3	56.4	-7.2	1,458.30	0
J2370	1.8	78	3,000.00	64.7	69.8	17.8	4,782.40	0
J2371	1.8	78.4	3,000.00	64.1	68.9	18.2	4,835.20	0
J2373	1.8	79.1	3,000.00	62.1	62	19.1	5,110.90	0
J2374	1.8	59.8	1,000.00	57.9	42.4	10	2,446.60	0
J2375	1.8	63.1	1,000.00	60.8	53.8	12.1	2,430.40	0
J2376	1.8	70	1,000.00	67.6	57.4	11.2	2,425.70	0
J2377	1.8	78.1	1,000.00	75.5	64.9	11.2	2,432.30	0
J2378	1.8	82.5	1,000.00	80	61.9	10.2	2,438.50	0
J2379	1.8	71.9	1,000.00	56.8	57.3	20	1,996.60	0
J238	2.2	82	1,000.00	72.9	50.9	-20.7	1,581.50	0
J2380	1.8	78.3	1,000.00	63.1	71.3	20	2,122.20	0
J2381	1.8	82.8	1,000.00	80.3	73.5	10.5	2,440.20	0
J2382	1.8	82.2	1,000.00	79.5	72.2	11.3	2,436.40	0
J2383	1.8	75.9	1,000.00	73.5	42	10.3	2,420.00	0

ID	Static Demand (gpm)	Static Pressure (psi)	Fire-Flow Demand (gpm)	Residual Pressure (psi)	Minimum System Pressure (psi)	Critical Available Node ID	Design Flow (gpm)	Fire Flow Deficit (gpm)
J2384	1.8	72	1,000.00	69.2	59.3	13.3	2,370.60	0
J2385	1.8	62.9	1,000.00	60.1	44	15.1	2,489.10	0
J2386	1.8	60.9	1,000.00	57.9	43.9	15.9	2,472.10	0
J2387	1.8	53	1,000.00	50.3	27.6	16.1	2,450.60	0
J2388	1.8	57.5	1,000.00	54.9	45.6	14.7	2,356.60	0
J2389	1.8	64.2	1,000.00	61.6	45.2	13.2	2,259.30	0
J2390	1.8	68.9	1,000.00	66	55.9	13.6	2,294.70	0
J2391	1.8	63.4	1,000.00	60.7	53.2	12.2	2,099.20	0
J2392	1.8	64.3	1,000.00	61.3	50.9	12	1,970.60	0
J2393	1.8	33.5	1,000.00	31.2	20	14.9	1,384.50	0
J2394	1.8	37.5	1,000.00	34.7	24.6	15.6	1,493.20	0
J2397	1.8	25.4	1,000.00	23.1	20	J2405	564.50	435.5
J24	2.2	35.8	1,000.00	32.4	24	18.4	2,248.60	0
J2402	1.8	33.9	1,000.00	30.4	20	J2405	464.10	535.9
J2403	1.8	37.4	1,000.00	34.1	21.6	J2405	488.90	511.1
J2404	1.8	44.6	1,000.00	39.8	33.9	J2405	488.90	511.1
J2405	1.8	20.9	1,000.00	17.4	20	J2405	434.00	566
J2406	1.8	70.5	1,000.00	68.1	54.1	12.1	2,464.10	0
J2407	1.8	73	1,000.00	70.3	58	12.7	2,437.60	0
J2408	1.8	74.6	1,000.00	72	60.9	12.4	2,434.30	0
J2409	1.8	70.7	1,000.00	67.5	53.3	15	2,435.70	0
J2410	1.8	60.2	1,000.00	56.9	48.2	16.7	2,474.40	0
J2411	1.8	59.3	1,000.00	55.6	40.1	17.6	2,459.10	0
J2412	1.8	52.6	1,000.00	48.8	28.8	18.3	2,449.60	0
J2413	1.8	45.8	1,000.00	42.2	29.5	18.8	2,439.00	0
J2414	1.8	59.4	1,000.00	56.9	33.2	14.5	2,455.50	0
J2415	1.8	59.9	1,000.00	57.2	45.2	14.8	2,466.70	0
J2416	1.80	59.7	1,000.00	57.1	48.7	15.1	2,468.80	0
J2417	1.8	59.8	1,000.00	57.2	41	14.9	2,475.60	0
J2418	1.8	59.8	1,000.00	57	48.7	15.6	2,474.30	0
J2419	1.8	61.2	1,000.00	58	45.9	16.3	2,473.20	0
J2420	1.8	60	1,000.00	57.2	33.2	15.5	2,475.20	0
J2421	1.8	60.1	1,000.00	57.2	47.3	15.8	2,474.70	0
J2422	1.8	58.4	1,000.00	55.8	38.9	14.9	2,459.60	0
J2423	1.8	55.7	1,000.00	53.2	35.3	15.3	2,488.30	0
J2424	1.8	64.6	1,000.00	62.4	20	12.3	2,544.40	0
J2425	1.8	66.8	1,000.00	64.6	20	11.9	2,564.10	0
J2426	1.8	55.5	1,000.00	53.1	30.2	14.8	2,409.30	0
J2427	1.8	63.5	1,000.00	60.6	49.9	15.2	2,473.20	0
J2428	1.8	65	1,000.00	62.7	36.3	12.5	2,576.90	0

ID	Static Demand (gpm)	Static Pressure (psi)	Fire-Flow Demand (gpm)	Residual Pressure (psi)	Minimum System Pressure (psi)	Critical Available Node ID	Design Flow (gpm)	Fire Flow Deficit (gpm)
J2429	1.8	84.7	1,000.00	82.5	25.5	10.1	2,681.40	0
J2430	1.8	61.6	1,000.00	58.4	47	16.8	2,618.90	0
J2431	1.8	57.5	1,000.00	47.5	49.6	20	2,116.20	0
J2432	1.8	57.7	1,000.00	46.7	33.5	20	2,012.60	0
J2433	1.8	58.1	1,000.00	46	31.3	20	1,910.70	0
J2434	1.8	71.8	1,000.00	69.4	57.4	10.7	2,425.80	0
J2435	1.8	69.7	1,000.00	66.8	57.5	13.8	2,424.20	0
J25	2.2	34.2	1,000.00	28.8	22.1	20	1,711.20	0
J2507	2.8	83.5	1,000.00	78	54.3	12.4	3,896.60	0
J2508	2.8	88.6	1,000.00	81.8	74.3	11.6	3,826.20	0
J2513	2.2	71	1,000.00	45.4	20	4.8	1,209.60	0
J2514	2.2	55.8	1,000.00	28.3	20	20	1,162.70	0
J2515	2.2	55.8	1,000.00	28.1	20	20	1,157.50	0
J2516	2.2	66.7	1,000.00	39.8	20	10	1,188.90	0
J2517	2.2	64.5	1,000.00	36.3	20	14.2	1,188.90	0
J2526	1.8	58.8	1,000.00	52.2	38.1	20	3,146.00	0
J2527	1.8	74.6	1,000.00	68.6	42.5	8.5	3,058.10	0
J2528	1.8	63.5	1,000.00	57.4	20	12.3	3,040.80	0
J2529	1.8	52.8	1,000.00	46	20	20	2,652.30	0
J2531	1.8	81.4	1,000.00	76.3	70.8	-4	3,066.20	0
J2534	1.8	112.3	1,000.00	102.2	92.1	-1.7	3,303.90	0
J2535	1.8	117.5	1,000.00	105.7	77.4	3.6	3,131.80	0
J2536	1.8	103.7	1,000.00	90.7	43.2	17.6	2,979.70	0
J2537	1.8	95	1,000.00	81.5	20	20	2,776.20	0
J2538	1.8	90.7	1,000.00	77.3	20	20	2,706.80	0
J2539	1.8	99.3	1,000.00	87	51.8	15.4	2,936.80	0
J2549	1.8	23.9	1,000.00	21.1	20	J2405	521.40	478.6
J3	2.2	68.7	1,000.00	46.1	20	3	1,208.60	0
J3001	5.2	43.3	3,000.00	36.7	39	20	6,830.20	0
J3002	5.2	43.7	1,000.00	42	38.8	20	6,463.80	0
J3003	5.2	53.7	1,000.00	51.4	47.2	10.4	5,423.60	0
J3004	5.2	64.5	1,000.00	61.8	47.1	5.4	5,097.20	0
J3005	5.2	66.6	1,000.00	63.7	46.2	5.1	5,018.30	0
J3006	5.2	73.6	1,000.00	70.6	50.9	0.2	4,962.70	0
J3007	5.2	75.1	1,000.00	72.1	51.6	-0.8	4,943.20	0
J3008	5.2	73.6	1,000.00	70.4	44.8	1.9	4,829.80	0
J3009	5.2	79.9	1,000.00	76.3	62.4	2.9	4,829.80	0
J3010	5.2	82.4	1,000.00	77.5	58.1	12	4,828.90	0
J3011	5.2	58.5	1,000.00	56.1	48	5.9	5,273.30	0
J3012	5.2	62.8	3,000.00	50.3	46.3	1.9	4,692.90	0

ID	Static Demand (gpm)	Static Pressure (psi)	Fire-Flow Demand (gpm)	Residual Pressure (psi)	Minimum System Pressure (psi)	Critical Available Node ID	Design Flow (gpm)	Fire Flow Deficit (gpm)
J3013	5.2	59.6	3,000.00	45.8	37.7	4.8	4,352.80	0
J3014	5.2	59.4	3,000.00	44.7	34.1	4.7	4,176.40	0
J3015	5.2	56.7	3,000.00	41.3	42.7	7.4	4,036.90	0
J3016	5.2	50.9	3,000.00	33.3	34.9	13.2	3,698.00	0
J3017	5.2	48.7	3,000.00	30.3	31.4	16.7	3,698.00	0
J3018	5.2	45.8	3,000.00	26.2	21.1	18.3	3,436.50	0
J3019	5.2	47.1	1,000.00	42.7	20.2	17	3,254.80	0
J3020	5.2	45.8	1,000.00	41.2	20	18.3	3,106.80	0
J3021	5.2	45	1,000.00	40.1	20	19.1	2,955.70	0
J3022	5.2	44.1	1,000.00	39	20	20	2,819.00	0
J3023	5.2	46.7	1,000.00	41.2	20	19.7	2,819.00	0
J3024	5.2	53.7	1,000.00	49	23.7	13.5	3,254.80	0
J3025	5.2	50.8	1,000.00	45.9	20	18.7	3,254.80	0
J3026	5.2	46.4	1,000.00	41.6	25.4	20	3,338.10	0
J3027	0.4	52.1	2,250.00	33.4	25.2	20	3,222.40	0
J3028	5.2	65.9	3,000.00	32.5	34.5	12.7	3,227.20	0
J3029	5.2	67.6	3,000.00	32.6	34.5	13	3,227.20	0
J3030	5.2	70.6	3,000.00	34.5	24.4	11.7	3,227.20	0
J3031	5.2	69.7	3,000.00	33.8	35.9	12.3	3,227.20	0
J3032	5.2	65.8	3,000.00	50.5	22.9	2.5	4,285.50	0
J3033	5.2	65	3,000.00	49.7	21.1	3.6	4,298.90	0
J3034	5.2	74.5	1,000.00	71.1	26.2	-2.7	4,355.80	0
J3035	5.2	80.9	1,000.00	77.5	28.2	-5.7	4,408.80	0
J3036	5.2	83.5	1,000.00	80.1	24	-5.9	4,487.40	0
J3037	5.2	82.6	1,000.00	79.2	27.5	-4.4	4,570.00	0
J3038	5.2	84.6	1,000.00	81.2	35.1	-4.9	4,635.70	0
J3039	5.2	82	1,000.00	78.7	38.7	-3.6	4,716.20	0
J3040	5.2	75.7	1,000.00	72.5	38.2	0.4	4,802.70	0
J3041	5.2	74.9	3,000.00	35.9	38.1	11.3	3,227.20	0
J3042	5.2	80.6	3,000.00	38.4	40.6	10	3,246.10	0
J3043	5.2	80	3,000.00	38.6	40.9	9.7	3,229.70	0
J3044	5.2	74.6	3,000.00	27.4	28.4	18.8	3,485.70	0
J3045	5.2	74	3,000.00	26.4	26.7	19.6	3,500.40	0
J3046	5.2	74.7	3,000.00	26.2	24.1	20	3,468.60	0
J3047	5.2	79.2	3,000.00	30.2	24.9	18.4	3,557.10	0
J3048	5.2	94.1	1,000.00	81.8	32.9	11.2	3,730.30	0
J3049	5.2	57.8	3,000.00	43	20.8	7.1	4,198.90	0
J3050	5.2	76.7	3,000.00	31.5	33.6	15.4	3,423.50	0
J3052	5.2	79.8	1,000.00	73.6	32.2	20	4,018.20	0
J3053	5.2	81.3	1,000.00	74.9	31.8	20	3,993.10	0

ID	Static Demand (gpm)	Static Pressure (psi)	Fire-Flow Demand (gpm)	Residual Pressure (psi)	Minimum System Pressure (psi)	Critical Available Node ID	Design Flow (gpm)	Fire Flow Deficit (gpm)
J3056	8.2	164.9	1,000.00	151.2	79.7	20	4,723.70	0
J3057	5.2	154.2	1,000.00	141.4	78.7	19.7	4,792.30	0
J3058	5.2	134.7	1,000.00	123.9	73.3	18.6	4,792.30	0
J3059	5.2	130.1	2,750.00	84.6	72.5	17.9	4,792.30	0
J3060	5.2	106.7	1,000.00	100.4	73.6	11.3	4,792.30	0
J3061	5.2	71.4	1,000.00	66	32.5	20	4,146.00	0
J34	2.2	34.9	1,000.00	33.6	30.5	20	4,044.20	0
J35	2.2	39.2	1,000.00	35.4	27.6	20	2,672.50	0
J36	2.2	39.9	1,000.00	34.9	29.4	19.4	2,220.40	0
J37	2.2	39.3	1,000.00	33.1	26.1	20	1,946.10	0
J38	2.2	41.5	1,000.00	35	27.6	20	2,015.00	0
J39	2.2	44.3	1,000.00	38.9	20.6	18.8	2,370.90	0
J4	2.2	49.2	1,000.00	34.8	20	20	1,483.30	0
J40	2.2	41.3	1,000.00	35.3	20	19.6	2,127.20	0
J41	2.2	43.7	1,000.00	34.8	24.6	20	1,774.30	0
J42	2.2	39.9	1,000.00	33.8	20	19.7	2,021.30	0
J43	2.2	39.6	1,000.00	33.5	20	19.7	1,998.50	0
J44	2.2	39.3	1,000.00	32.3	24.4	20	1,821.80	0
J45	2.2	40	1,000.00	33.9	20	19.6	2,014.50	0
J46	2.2	40.3	1,000.00	31.4	21	20	1,614.60	0
J47	2.2	46.8	1,000.00	36.4	24.9	20	1,731.00	0
J48	2.2	50.1	1,000.00	38.4	25.4	18.9	1,690.90	0
J49	2.2	53.3	1,000.00	40.7	25.9	18.2	1,690.90	0
J5	2.2	36.8	1,000.00	35	33.2	20	4,068.40	0
J50	2.2	53.2	1,000.00	38.5	21.8	15.8	1,477.60	0
J51	2.2	54.1	1,000.00	38.9	21.5	16	1,477.60	0
J52	2.2	49	1,000.00	32.6	20	20	1,386.50	0
J53	2.2	69.5	1,000.00	49.4	25.8	6.4	1,390.00	0
J54	2.2	74	1,000.00	50.9	23.6	1.9	1,285.50	0
J55	2.2	44.5	1,000.00	39.3	23.3	19.8	2,527.20	0
J56	2.2	45	1,000.00	39.6	22.4	19	2,465.60	0
J57	2.2	49.4	1,000.00	41.9	33.9	14.6	1,996.50	0
J58	2.2	49	1,000.00	37.8	25.1	15	1,560.30	0
J59	2.2	50.7	1,000.00	38.3	24.1	13.3	1,467.10	0
J6	2.2	36.6	1,000.00	34.9	33.3	20	4,199.90	0
J60	2.2	49.4	1,000.00	36	20	14.6	1,397.00	0
J61	2.2	48.6	1,000.00	34.6	20	17.6	1,427.80	0
J62	2.2	47.8	1,000.00	33.8	20	18.2	1,423.60	0
J63	2.2	44	1,000.00	28.4	20	20	1,281.40	0
J64	2.2	48.2	1,000.00	32.7	20	20	1,407.90	0

ID	Static Demand (gpm)	Static Pressure (psi)	Fire-Flow Demand (gpm)	Residual Pressure (psi)	Minimum System Pressure (psi)	Critical Available Node ID	Design Flow (gpm)	Fire Flow Deficit (gpm)
J65	2.2	53.7	1,000.00	47.5	20	11.4	2,344.60	0
J66	2.2	41.7	1,000.00	35.8	20	20	2,214.60	0
J67	2.2	43	1,000.00	35.9	26.7	20	2,021.00	0
J68	2.2	42.9	1,000.00	33.5	24.9	20	1,688.80	0
J69	2.2	44.7	1,000.00	35.5	20	20	1,792.30	0
J7	2.2	36.5	1,000.00	34.9	26	20	4,406.90	0
J70	2.2	46.2	1,000.00	34.8	25.1	20	1,625.40	0
J71	2.2	46.8	1,000.00	38.3	35.9	20	1,960.20	0
J72	2.2	47.1	1,000.00	39.4	31.5	20	2,110.80	0
J73	2.2	46.9	1,000.00	36.5	26.8	20	1,743.90	0
J74	2.2	46.4	1,000.00	37.7	20	20	1,923.90	0
J75	2.2	44.9	1,000.00	36.6	20	20	1,915.80	0
J76	2.2	47.7	1,000.00	33.2	21.3	19.2	1,429.00	0
J78	2.2	48.6	1,000.00	33.3	20	20	1,434.70	0
J8	2.2	36.2	1,000.00	34.6	22.4	20	4,422.60	0
J80	2.2	49.9	1,000.00	34.2	20	19.4	1,432.50	0
J82	2.2	50.8	1,000.00	36.1	23.1	20	1,530.90	0
J83	2.2	51.5	1,000.00	37.2	26.1	20	1,580.90	0
J85	2.2	52	1,000.00	38.5	29.7	19	1,617.00	0
J86	2.2	51	1,000.00	28.8	33.3	20	1,209.10	0
J87	2.2	57.3	1,000.00	50.2	37.6	17.5	2,587.50	0
J88	2.2	54.5	1,000.00	47.4	37	20	2,581.60	0
J89	2.2	55.3	1,000.00	48.4	32.1	20	2,664.90	0
J9	2.2	36.2	1,000.00	34.3	30.5	20	4,028.70	0
J90	2.2	51.9	1,000.00	45.5	20	20	2,625.40	0
J91	2.2	52	1,000.00	45.5	20	20	2,614.50	0
J92	2.2	56.4	1,000.00	47.9	37.9	18.5	2,294.50	0
J93	2.2	53.5	1,000.00	43.3	35.8	20	2,003.80	0
J94	2.2	58.2	1,000.00	47.9	40.4	20	2,157.30	0
J95	2.2	56.1	1,000.00	47.7	38.8	20	2,356.60	0
J96	2.2	57.2	1,000.00	51.2	20	13.9	2,541.40	0
J97	2.2	57.6	1,000.00	51.5	22.2	13.3	2,517.90	0
J98	2.2	58.9	1,000.00	53.1	20	10.2	2,459.30	0
J99	2.2	59.7	1,000.00	53.6	37.2	11.1	2,448.50	0

2034 Fire Flow Scenario
Existing System- No Improvments

ID	Static Demand (gpm)	Static Pressure (psi)	Fire-Flow Demand (gpm)	Residual Pressure (psi)	Minimum System Pressure (psi)	Critical Available Node ID	Design Flow (gpm)	Fire Flow Deficit (gpm)
J10	2.9	36	1,000.00	33.5	32.2	J10	3,493.50	0
J100	2.9	64.9	1,000.00	57.2	20	J219	2,187.50	0
J1003	1.1	49.9	1,000.00	44.3	41.7	J1032	1,674.90	0
J1004	1.1	51.9	1,000.00	44.9	32.9	J1032	1,612.50	0
J1005	1.1	51.4	1,000.00	44.5	27.3	J1032	1,593.40	0
J1006	1.1	50.7	1,000.00	45.3	27.3	J1032	2,446.50	0
J1007	1.1	47.5	1,000.00	44.1	26.6	J1032	2,697.70	0
J1008	1.1	47.6	1,000.00	44.4	20	J1032	2,740.10	0
J1009	1.1	47.9	1,000.00	44.6	29.2	J1032	2,753.60	0
J101	2.9	68.7	1,000.00	61.5	43.2	J219	2,174.40	0
J1010	1.1	45.2	1,000.00	41.7	27.4	J1011	2,653.10	0
J1011	1.1	40.6	1,500.00	9.9	29.1	J1011	1,209.20	290.8
J1012	1.1	47.5	1,000.00	44	23	J1012	3,073.40	0
J1013	1.1	46.6	1,000.00	43.1	24.6	J1013	3,046.90	0
J1014	1.1	50.5	1,000.00	36.8	39.7	J1014	1,543.20	0
J1015	1.1	44.9	1,000.00	42.3	20.2	J1015	3,283.00	0
J1016	1.1	44.4	1,000.00	41.7	23.2	J1016	3,249.60	0
J1019	1.1	42.2	1,000.00	39.8	28.3	J1019	3,384.90	0
J102	2.9	63.6	1,000.00	53.6	42.8	J219	2,174.40	0
J1020	1.1	41.5	1,000.00	39.2	20	J1047	3,375.10	0
J1021	1.1	36.1	1,000.00	34.2	20	J1047	2,863.20	0
J1022	1.1	35.2	1,000.00	33.5	20	J1047	2,694.40	0
J1023	1.1	32.9	1,000.00	31.1	20	J1047	2,759.70	0
J1024	1.1	31.4	1,000.00	29.7	20	J1047	2,906.00	0
J1025	1.1	30.4	1,000.00	29.1	20	J1047	3,000.50	0
J1026	1.1	34.6	1,000.00	32.7	25	J1047	2,820.20	0
J1027	1.1	34.2	1,000.00	32.4	20	J1047	2,820.20	0
J103	2.9	63.6	1,000.00	56.90	39.4	J219	2,138.90	0
J1032	1.1	33.8	1,000.00	22.2	20	J1032	1,099.00	0
J1033	1.1	34.9	1,000.00	33.1	20	J1047	2,620.00	0
J1034	1.1	38.5	1,000.00	35.9	25.7	J1047	2,600.70	0
J1035	1.1	37.8	1,000.00	35	20	J1047	2,577.40	0
J1036	1.1	36.8	1,000.00	33.7	20	J1036	2,525.80	0
J1037	1.1	36.8	1,000.00	33.3	20	J1037	2,377.10	0
J1038	1.1	37.3	1,000.00	33.9	20	J1042	2,306.50	0
J1039	1.1	37.2	1,000.00	33.9	21.1	J1042	2,269.20	0
J104	2.9	64.7	1,000.00	58.2	20	J219	2,130.80	0
J1040	1.1	36.6	1,000.00	34	23.5	J1047	2,558.50	0
J1041	1.1	34.2	1,000.00	32.2	20	J1047	2,508.00	0
J1042	1.1	34.7	1,000.00	29.6	23.1	J1042	1,778.60	0

ID	Static Demand (gpm)	Static Pressure (psi)	Fire-Flow Demand (gpm)	Residual Pressure (psi)	Minimum System Pressure (psi)	Critical Available Node ID	Design Flow (gpm)	Fire Flow Deficit (gpm)
J1043	1.1	34	1,000.00	32.00	20	J1047	2,487.50	0
J1044	1.1	33.9	1,000.00	31.8	20	J1047	2,462.60	0
J1045	1.1	32.1	1,000.00	29.9	20	J1047	2,288.10	0
J1046	1.1	33.2	1,000.00	30.8	20	J1047	2,284.00	0
J1047	1.1	29.5	1,000.00	27.2	20	J1047	2,172.50	0
J1048	1.1	31.1	1,000.00	28.9	20	J1047	2,277.70	0
J1049	1.1	30.5	1,000.00	28.4	20	J1049	2,423.00	0
J105	2.9	71.1	1,000.00	64.9	20	J219	2,161.00	0
J1050	1.1	31.9	1,000.00	28.3	23.8	J1050	1,933.20	0
J1051	1.1	38.4	1,000.00	32.5	24.9	J1051	1,857.70	0
J1053	1.1	34.5	1,000.00	31.1	22.2	J1053	2,223.80	0
J1054	1.1	36.5	1,000.00	33	23.4	J1053	2,241.60	0
J1055	1.1	36.4	1,000.00	31	24.2	J1055	1,839.70	0
J1056	1.1	45.1	1,000.00	36.2	24.8	J1056	1,758.00	0
J1057	1.1	39.1	1,000.00	30.3	20	J1057	1,523.30	0
J1058	1.1	44.9	1,000.00	40.9	28.7	J1053	2,300.40	0
J1059	1.1	67.1	1,000.00	60.6	52.4	J1053	2,300.40	0
J106	2.9	36.1	1,000.00	32.8	28.7	J106	2,816.60	0
J1060	1	104.7	1,000.00	93.9	80.2	J1053	2,300.40	0
J1061	1.1	48.6	1,000.00	43.7	24.5	J1063	2,347.20	0
J1062	1.1	49.4	1,000.00	44.3	23.4	J1063	2,282.30	0
J1063	1.1	42.8	1,000.00	36.2	27.8	J1063	1,971.90	0
J1064	1.1	50.2	1,000.00	44.9	20.7	J1063	2,349.40	0
J1065	1.1	51.2	1,000.00	40.6	42.9	J1065	1,801.20	0
J1066	1.1	50.6	1,000.00	45.2	20	J1071	2,322.90	0
J1067	1.1	51.7	1,000.00	46	20	J1071	2,193.50	0
J1068	1.1	47.3	1,000.00	37	39.2	J1068	1,704.60	0
J1069	1.1	52.4	1,000.00	46.5	20	J1071	2,060.20	0
J107	2.9	50.5	1,000.00	43.1	22.3	J111	2,288.60	0
J1070	1.1	52.2	1,000.00	46.4	20	J1071	2,074.00	0
J1071	1.1	41.8	1,000.00	25.6	29	J1071	1,176.90	0
J1072	1.1	50.1	1,000.00	44.3	20	J1071	2,275.80	0
J1073	1.1	63.6	1,000.00	57.4	35.2	J1086	1,778.10	0
J1074	1.1	64.9	1,000.00	58.3	20.6	J1086	1,711.00	0
J1075	1.1	51	1,000.00	44.1	34.6	J1075	2,280.70	0
J1076	1.1	55.2	1,000.00	37.9	41.5	J1077	1,378.70	0
J1077	1.1	51	1,000.00	27.5	32.4	J1077	1,165.80	0
J1078	1.1	50.1	1,000.00	27.4	32.1	J1078	1,169.20	0
J1079	1.1	53.2	1,000.00	38.6	41.6	J1078	1,490.50	0
J108	2.9	43	1,000.00	34.9	20	J108	1,916.40	0

ID	Static Demand (gpm)	Static Pressure (psi)	Fire-Flow Demand (gpm)	Residual Pressure (psi)	Minimum System Pressure (psi)	Critical Available Node ID	Design Flow (gpm)	Fire Flow Deficit (gpm)
J1080	1.1	61.8	1,000.00	55.2	20	J1086	1,645.40	0
J1081	1.1	57.8	1,000.00	51.4	22.6	J1086	1,607.50	0
J1082	1.1	56.8	1,000.00	50.7	28.7	J1086	1,568.50	0
J1083	1.1	56.6	1,000.00	50.7	20	J1086	1,596.80	0
J1086	1.1	33.4	1,000.00	20.9	20	J1086	1,037.10	0
J1087	1.1	53	1,000.00	46.9	20	J1086	1,675.20	0
J1088	1.1	48.2	1,000.00	42.5	23.3	J1086	1,753.60	0
J109	2.9	47	1,000.00	38.9	20	J109	2,095.80	0
J1090	1.1	80.9	1,000.00	74.5	34.4	J1086	1,775.20	0
J1091	1.1	80.5	1,000.00	74.1	31	J1086	1,774.50	0
J1092	1.1	81.9	1,000.00	72.5	61.4	J1086	1,775.20	0
J1093	1.1	85.9	1,000.00	79.7	20	J1086	1,738.50	0
J1094	1.1	86.6	1,000.00	80.2	53.8	J1086	1,745.10	0
J1095	1.1	68.1	1,000.00	61.7	26.4	J1086	1,660.10	0
J1096	1.1	68.2	1,000.00	59.9	49.9	J1086	1,660.10	0
J1097	1.1	70.3	1,000.00	52.9	56.5	J1086	1,660.10	0
J1098	1.1	83.2	1,000.00	75.2	50.4	J1086	1,770.40	0
J1099	1.1	76.3	1,000.00	56.7	60.8	J1100	1,769.30	0
J11	2.9	35	1,000.00	34	28.2	J12	5,930.70	0
J110	2.9	63.1	1,000.00	58	20	J219	2,387.50	0
J1100	1.1	75.3	1,000.00	53.5	58	J1100	1,665.40	0
J1101	1.1	94.1	1,000.00	85.7	67.3	J1086	1,835.70	0
J1102	1.1	91.4	1,000.00	82.5	71.6	J1086	1,835.70	0
J1103	1.1	89.8	1,000.00	80.7	59.9	J1086	1,855.40	0
J1104	1.1	87.2	1,000.00	76.1	62.4	J1086	1,835.70	0
J1105	1.1	87.2	1,000.00	75.1	60	J1086	1,835.70	0
J1106	1.1	95.5	1,000.00	88.4	48.1	J1086	1,796.30	0
J1107	1.1	94.4	1,500.00	79.6	62.9	J1086	1,792.30	0
J1108	1.1	99.5	1,000.00	82.3	85.9	J1086	1,796.30	0
J1109	1.1	95.6	1,000.00	89	34.7	J1086	1,774.90	0
J1110	1.1	96	1,000.00	88.4	85.7	J1086	1,774.90	0
J1111	1.1	92	1,000.00	35.8	81.9	J1111	1,144.90	0
J1112	1.1	96.6	1,000.00	87	64	J1086	1,769.20	0
J1113	1.1	95.5	1,000.00	87.4	62.6	J1086	1,772.20	0
J1114	1.7	96.4	1,000.00	86.8	75	J1086	1,772.80	0
J1116	1.1	84.1	1,000.00	70.1	53.6	J1086	1,775.20	0
J1117	1.1	84.5	1,000.00	69.5	70.3	J1086	1,775.20	0
J1118	1.1	84.8	1,000.00	64.6	55.8	J1086	1,775.20	0
J1119	1.1	85.7	1,000.00	64.9	53.8	J1086	1,775.20	0
J1120	1.1	84.5	1,000.00	47.2	55.3	J1122	1,309.70	0

ID	Static Demand (gpm)	Static Pressure (psi)	Fire-Flow Demand (gpm)	Residual Pressure (psi)	Minimum System Pressure (psi)	Critical Available Node ID	Design Flow (gpm)	Fire Flow Deficit (gpm)
J1122	1.1	80.8	1,000.00	34.4	20	J1122	1,160.80	0
J1123	1.1	113	1,000.00	61	20	J1122	1,160.80	0
J1127	1.1	114.3	1,000.00	90.1	52	J1086	1,775.20	0
J1128	1.1	121.7	1,000.00	91.3	97.6	J1086	1,775.20	0
J1129	1.1	105	1,000.00	74	80.4	J1129	1,740.20	0
J113	2.9	54.8	1,000.00	36.5	40.3	J111	1,184.30	0
J1130	1.1	126.8	1,000.00	92.1	99.3	J1086	1,775.20	0
J1131	1.1	104.7	1,000.00	81.7	60.1	J1086	1,775.20	0
J1132	1.1	104.9	1,000.00	80.5	85.6	J1086	1,775.20	0
J1133	1.1	103.7	1,000.00	68.3	75.8	J1134	1,514.90	0
J1134	1.1	95.3	1,000.00	44.9	55.4	J1134	1,246.10	0
J1135	1.1	96	1,000.00	33.3	46.3	J1135	1,111.50	0
J1136	1.1	91.6	1,000.00	82.1	60.2	J1086	1,864.70	0
J1137	1.1	95.5	1,000.00	71.5	71.9	J1137	1,872.80	0
J1138	1.1	97.5	1,000.00	68.1	79.2	J1138	1,697.90	0
J1139	1.1	107.2	1,000.00	93.4	30	J1152	1,721.40	0
J114	2.9	55.1	1,000.00	47.3	32.6	J136	2,160.90	0
J1140	1.1	108.2	1,000.00	93.7	93.3	J1152	1,726.60	0
J1141	1.1	110.2	1,000.00	72.6	87.3	J1141	1,610.90	0
J1142	1.1	98.8	1,000.00	86	71.9	J1152	1,713.40	0
J1143	1.1	98	1,000.00	85.3	57.9	J1152	1,713.10	0
J1144	1.1	85.1	1,000.00	73.4	34.8	J1152	1,666.20	0
J1145	1.1	81.9	1,000.00	70.4	35.1	J1152	1,663.90	0
J1147	1.1	62.4	1,000.00	47.8	29.6	J1152	1,394.40	0
J1148	1.1	62.2	1,000.00	48.3	31	J1152	1,394.40	0
J1149	1.1	65	1,000.00	52.5	37.2	J1152	1,482.80	0
J115	2.9	57	1,000.00	43	28.7	J119	1,772.20	0
J1150	1.1	61.8	1,000.00	45.9	26.1	J1152	1,296.60	0
J1151	1.1	53.9	1,000.00	35.9	20	J1152	1,208.70	0
J1152	1.1	45.4	1,000.00	24.9	20	J1152	1,126.00	0
J1153	1.1	46.8	1,000.00	25	20	J1153	1,120.50	0
J1155	1.1	73.7	1,500.00	50.2	37	J1152	1,659.10	0
J1156	1.1	76	1,500.00	50.7	28.1	J1152	1,660.90	0
J1157	1.1	78.8	1,500.00	52.5	24.1	J1152	1,662.90	0
J1158	1.1	79.2	1,500.00	50	44.9	J1152	1,678.50	0
J116	2.9	57.8	1,000.00	42.8	27.5	J119	1,707.20	0
J1160	1.1	80.6	1,500.00	49.5	47	J1152	1,693.10	0
J1162	1.1	82.7	1,500.00	52.2	65.5	J1152	1,695.50	0
J1163	1.1	92.3	1,500.00	56.6	58.6	J1152	1,697.60	0
J1164	1.1	93.4	1,500.00	56.7	47.2	J1152	1,698.30	0

ID	Static Demand (gpm)	Static Pressure (psi)	Fire-Flow Demand (gpm)	Residual Pressure (psi)	Minimum System Pressure (psi)	Critical Available Node ID	Design Flow (gpm)	Fire Flow Deficit (gpm)
J1165	1.1	92.4	1,500.00	62.4	76.4	J1152	1,699.70	0
J1167	1.1	94.2	1,500.00	66.8	28.2	J1152	1,706.80	0
J1169	1.1	99.7	1,500.00	73	20	J1152	1,712.80	0
J117	2.9	57.8	1,000.00	42.4	26.5	J119	1,678.30	0
J1170	1.1	103.1	1,500.00	75.1	35	J1152	1,712.60	0
J1173	1.1	81	1,000.00	74.3	39.6	J1086	1,767.50	0
J1176	1.1	60.3	1,500.00	36.2	20	J1152	1,722.10	0
J1177	1.1	58.9	1,500.00	33.5	20	J1152	1,722.10	0
J1179	1.1	67.1	1,500.00	41.8	20	J1152	1,722.10	0
J118	2.9	58.8	1,000.00	36.7	41.3	J120	1,353.90	0
J1180	1.1	63.7	1,500.00	39.3	20	J1152	1,722.10	0
J1181	1.1	47.9	1,000.00	38.7	34.2	J1032	1,371.40	0
J1182	1.1	48.2	1,000.00	38.6	32.9	J1032	1,373.00	0
J119	2.9	56.7	1,000.00	32.9	37.6	J119	1,287.00	0
J12	2.9	34.8	1,000.00	33.3	31.3	J12	4,206.10	0
J120	2.9	57.3	1,000.00	29.6	35.3	J120	1,190.20	0
J121	2.9	58.7	1,000.00	25	31.9	J121	1,085.10	0
J122	2.9	62.1	1,000.00	23.4	32.6	J125	1,022.40	0
J13	2.9	35.8	1,000.00	33.6	29.9	J13	3,284.40	0
J131	2.9	56	1,000.00	47	25.5	J136	1,944.30	0
J132	2.9	55.6	1,000.00	46.60	24.1	J136	1,921.70	0
J133	2.9	58.5	1,000.00	45.6	31.1	J133	1,910.20	0
J134	2.9	47.6	1,000.00	34.4	20	J136	1,507.10	0
J135	2.9	54.4	1,000.00	44.4	33.9	J136	1,801.70	0
J136	2.9	46	1,000.00	26.9	30.7	J136	1,197.20	0
J137	2.9	57.2	1,000.00	47.2	20	J139	1,926.60	0
J138	2.9	56.7	1,000.00	45.7	33.9	J139	1,814.30	0
J139	2.9	49.4	1,000.00	35.3	20	J139	1,547.40	0
J140	2.9	50	1,000.00	30.1	34.1	J140	1,271.60	0
J141	2.9	59.1	1,000.00	48.1	20	J139	2,014.80	0
J142	2.9	54.6	1,000.00	39.9	26.9	J142	1,652.70	0
J143	2.9	59	1,000.00	45.1	37.2	J143	1,833.70	0
J144	2.9	61.8	1,000.00	50.4	20	J142	2,031.00	0
J145	2.9	62.3	1,000.00	50.6	23	J142	2,102.20	0
J146	2.9	62.8	1,000.00	57.7	20	J219	2,378.50	0
J147	2.9	62.4	1,000.00	50.4	34.5	J147	2,118.40	0
J148	2.9	59	1,000.00	48.3	40.7	J148	2,170.50	0
J149	2.9	57.7	1,000.00	49.2	34	J150	2,437.00	0
J15	2.9	43	1,000.00	39	28.7	J15	2,721.50	0
J150	2.9	56.3	1,000.00	34.9	39.2	J150	1,357.10	0

ID	Static Demand (gpm)	Static Pressure (psi)	Fire-Flow Demand (gpm)	Residual Pressure (psi)	Minimum System Pressure (psi)	Critical Available Node ID	Design Flow (gpm)	Fire Flow Deficit (gpm)
J151	2.9	66.1	1,000.00	54.80	41.1	J151	2,301.40	0
J152	2.9	65.9	2,500.00	28.2	37.3	J219	2,239.20	260.8
J153	2.9	69.4	2,500.00	42.7	52.9	J219	2,184.50	315.5
J154	2.9	72.6	1,000.00	66.6	20	J219	2,170.20	0
J155	2.9	73.9	1,000.00	68	27.6	J219	2,170.70	0
J156	2.9	70.3	1,500.00	25.3	52.6	J156	1,599.40	0
J16	2.9	45.2	1,000.00	39	31.5	J16	2,195.20	0
J160	2.9	78.4	1,500.00	65.8	65	J219	2,110.30	0
J161	2.9	77.4	1,500.00	60.7	59.5	J219	2,110.30	0
J164	2.9	76.2	1,500.00	61.3	60.4	J219	2,182.40	0
J166	2.9	78.8	1,500.00	55.6	54	J219	2,182.40	0
J167	2.9	80.9	1,000.00	74.7	51.8	J219	2,019.30	0
J168	2.9	80.3	1,000.00	73.3	47.6	J219	1,861.80	0
J169	2.9	82.2	1,000.00	73.1	51.4	J219	2,015.40	0
J170	2.9	81.2	1,000.00	70.5	33.2	J219	1,992.80	0
J171	2.9	83.4	1,000.00	71.8	50.9	J219	1,966.60	0
J172	2.9	75.8	1,000.00	66.4	62.6	J219	1,898.30	0
J173	2.9	75.1	1,000.00	66.5	30.1	J219	1,881.90	0
J174	2.9	77.4	1,000.00	65.3	67.5	J219	1,898.30	0
J175	2.9	80.7	1,500.00	61.5	45.7	J219	1,761.40	0
J176	2.9	84.4	1,000.00	72.5	59.9	J219	1,761.40	0
J177	2.9	88.8	1,000.00	77.3	40.5	J219	1,650.70	0
J178	2.9	88.8	1,000.00	77.1	64.9	J219	1,650.70	0
J179	2.9	95.2	1,000.00	80.2	63.8	J219	1,650.70	0
J18	2.9	42	1,000.00	36.5	33.1	J18	2,186.30	0
J180	2.9	96.3	1,000.00	80.2	62.2	J219	1,650.70	0
J181	2.9	104	1,000.00	91.6	37.9	J219	1,542.10	0
J182	2.9	104.8	1,000.00	92.3	36.4	J219	1,531.90	0
J183	2.9	107.3	1,000.00	94.7	34.7	J219	1,511.20	0
J184	2.9	103.5	1,000.00	86.5	67.5	J219	1,511.20	0
J185	2.9	114	1,000.00	101.2	31.9	J219	1,447.30	0
J186	2.9	113.1	1,000.00	100.4	24.3	J219	1,439.80	0
J187	2.9	124.6	1,000.00	106.4	86	J219	1,542.10	0
J188	2.9	109.6	1,000.00	96.1	52.2	J219	1,424.50	0
J189	2.9	112.4	1,000.00	99.5	31.2	J219	1,425.70	0
J19	2.9	39.9	1,000.00	32.7	20.7	J19	1,770.40	0
J190	2.9	110.7	1,000.00	95.3	78.6	J219	1,424.50	0
J191	2.9	98.7	1,000.00	84.8	20.8	J219	1,410.10	0
J192	2.9	97	1,000.00	83.1	20	J219	1,408.50	0
J193	2.9	67.4	2,500.00	25.1	31.9	J219	2,258.70	241.3

ID	Static Demand (gpm)	Static Pressure (psi)	Fire-Flow Demand (gpm)	Residual Pressure (psi)	Minimum System Pressure (psi)	Critical Available Node ID	Design Flow (gpm)	Fire Flow Deficit (gpm)
J194	2.9	63.7	1,000.00	42.3	46.6	J194	1,509.40	0
J195	2.9	64.5	1,000.00	29.4	36.6	J195	1,145.60	0
J196	2.9	105.8	1,000.00	92.1	31.4	J219	1,421.70	0
J197	2.9	103.8	1,000.00	75.1	80.8	J219	1,424.50	0
J198	2.9	95.7	1,000.00	66.8	72.6	J219	1,410.10	0
J199	2.9	91.5	1,000.00	77.9	30.6	J219	1,413.30	0
J20	2.9	40.1	1,000.00	33.1	24.4	J20	1,811.30	0
J200	2.9	89.8	1,000.00	76.4	20	J219	1,412.00	0
J2004	8.6	69.9	1,000.00	53.7	41.5	J2008	2,035.30	0
J2005	8.6	71.6	1,000.00	54.5	41.2	J2008	1,937.80	0
J2006	8.6	69.5	1,000.00	49.9	33.3	J2008	1,715.10	0
J2007	8.6	68.7	1,000.00	48.7	31.1	J2008	1,689.30	0
J2008	8.6	62.4	1,000.00	41.5	22.6	J2008	1,633.20	0
J2009	8.6	64	1,000.00	43	23.9	J2009	1,666.60	0
J201	2.9	90.3	1,000.00	75.4	20	J219	1,422.80	0
J2010	2.1	40.6	1,000.00	37	26.3	J2017	1,989.70	0
J2011	2.1	41.6	1,000.00	37.9	26.4	J2017	1,928.80	0
J2012	2.1	42	1,000.00	37.8	33.7	J2017	1,778.10	0
J2013	2.1	40.5	1,000.00	34.4	27.7	J2017	1,365.90	0
J2014	2.1	38.3	1,000.00	29.4	20	J2017	1,088.90	0
J2015	2.1	37.6	1,000.00	27.8	20	J2017	1,030.50	0
J2016	2.1	31.8	1,000.00	19.9	20	J2016	998.50	1.5
J2018	2.1	47.1	1,000.00	43.2	27.4	J2017	2,115.50	0
J2019	2.1	61.8	1,000.00	57.7	39.1	J2017	2,715.70	0
J202	2.9	112.8	1,000.00	97.9	38.7	J219	1,428.90	0
J2020	2.1	62.9	1,000.00	58.9	34.2	J2017	2,784.70	0
J2021	2.1	60.3	1,000.00	51.3	46.1	J2023	2,351.80	0
J2022	2.1	52.3	1,000.00	41.6	20	J2023	1,749.70	0
J2023	2.1	44.8	1,000.00	34.4	20	J2023	1,660.80	0
J2024	2.1	50.1	1,000.00	40.3	20	J2023	1,773.10	0
J2025	2.1	57.1	1,000.00	47.6	20	J2023	1,839.20	0
J2026	2.1	61.5	1,000.00	52.4	22.3	J2023	1,920.70	0
J2027	2.1	66.3	1,000.00	58	34.4	J2023	2,070.40	0
J2028	2.1	65.3	1,000.00	56.9	47.3	J2023	2,070.40	0
J2029	2.1	69.6	1,000.00	61.6	20	J2023	2,130.10	0
J203	2.9	82.1	1,000.00	69.3	36.1	J219	1,394.70	0
J2030	2.1	65.3	1,000.00	56.2	31.8	J2023	2,208.30	0
J2031	2.1	73.5	1,000.00	66	47.7	J2023	2,231.10	0
J2032	2.1	73	1,000.00	65.3	52.4	J2023	2,224.20	0
J2033	2.1	68.3	1,000.00	59.7	35.4	J2023	2,216.90	0

ID	Static Demand (gpm)	Static Pressure (psi)	Fire-Flow Demand (gpm)	Residual Pressure (psi)	Minimum System Pressure (psi)	Critical Available Node ID	Design Flow (gpm)	Fire Flow Deficit (gpm)
J2034	2.1	67.7	1,000.00	57.9	46.7	J2023	2,216.90	0
J2035	2.1	65.4	1,000.00	54.3	41.3	J2023	2,216.90	0
J2036	2.1	70.2	1,000.00	59.9	48	J2023	2,224.20	0
J2037	2.1	74.8	1,000.00	67.8	52.2	J2023	2,338.50	0
J2038	2.1	77.9	1,000.00	71.5	33.6	J2023	2,487.30	0
J2039	2.1	78	1,000.00	71.6	52.6	J2023	2,495.80	0
J204	2.9	82.2	1,000.00	69.6	20	J219	1,388.40	0
J2040	2.1	77.9	1,000.00	70.7	53.5	J2023	2,541.20	0
J2041	2.1	77.9	1,000.00	70.4	51.4	J2023	2,557.30	0
J2042	2.1	77.7	1,000.00	72.9	25.7	J2023	2,950.50	0
J2043	2.1	77.9	2,500.00	41.7	49.7	J2023	2,569.70	0
J2044	2.1	70.6	1,000.00	60.7	48.5	J2044	2,556.50	0
J2045	2.1	70.6	1,000.00	61.3	53.8	J2045	2,663.20	0
J2046	2.1	78	1,000.00	73.5	37.2	J2549	3,024.40	0
J2047	2.1	84	1,000.00	72.4	66.7	J2023	2,602.90	0
J2048	2.1	94.4	1,000.00	80.5	67.1	J2048	2,582.60	0
J2049	2.1	96.2	1,000.00	81.6	63.8	J2049	2,549.40	0
J205	2.9	84.8	1,000.00	71.7	40.3	J219	1,395.60	0
J2050	2.1	90.8	1,000.00	78	69.2	J2050	2,646.40	0
J2051	2.1	84.8	1,000.00	75.4	60.2	J2023	2,748.30	0
J2052	2.1	85.3	1,000.00	75	69.6	J2023	2,750.10	0
J2053	2.1	94.6	1,000.00	82.2	64.2	J2023	2,764.00	0
J2054	2.1	95	1,000.00	82.6	65.6	J2023	2,764.70	0
J2055	2.1	84.3	1,000.00	77.7	77.7	J2023	2,792.90	0
J2056	2.1	84.6	1,000.00	78.6	27.4	J2023	2,794.80	0
J2057	2.1	84.8	1,000.00	78.8	35.4	J2023	2,794.80	0
J2058	2.1	84.1	1,000.00	78.1	20	J2023	2,795.00	0
J2059	2.1	84.1	1,000.00	77.8	57.8	J2023	2,795.20	0
J206	2.9	81.4	1,000.00	66.9	51.3	J219	1,395.60	0
J2060	2.1	82.3	1,000.00	75.8	39.5	J2023	2,795.40	0
J2061	2.1	80.6	1,000.00	74.3	55.7	J2023	2,795.70	0
J2062	2.1	80.2	1,000.00	74.5	20	J2023	2,795.50	0
J2063	2.1	79.6	1,000.00	74	24.3	J2023	2,795.80	0
J2064	2.1	79	1,000.00	73.4	20	J2023	2,796.20	0
J2065	2.1	79.2	1,000.00	73.6	51.2	J2023	2,796.20	0
J2066	2.1	78.7	1,000.00	73.1	20	J2023	2,797.00	0
J2067	2.1	67.4	1,000.00	57.4	46	J2068	2,319.20	0
J2068	2.1	62.6	1,000.00	43	47	J2068	1,546.70	0
J2069	2.1	85.1	1,000.00	78.6	31.4	J2023	2,794.80	0
J207	2.9	64.9	1,000.00	53.1	20	J219	1,315.80	0

ID	Static Demand (gpm)	Static Pressure (psi)	Fire-Flow Demand (gpm)	Residual Pressure (psi)	Minimum System Pressure (psi)	Critical Available Node ID	Design Flow (gpm)	Fire Flow Deficit (gpm)
J2070	2.1	86.4	1,000.00	76.3	78.3	J2023	2,794.80	0
J2071	2.1	90.6	1,000.00	68.2	72.8	J2071	1,901.60	0
J2072	2.1	83.7	1,000.00	76.9	27	J2023	2,794.80	0
J2073	2.1	83.8	1,000.00	75.4	66.1	J2023	2,794.80	0
J2074	2.1	83.3	1,000.00	76.2	68.5	J2023	2,794.80	0
J2075	2.1	74.5	1,000.00	60.8	44.5	J2075	2,193.00	0
J2076	2.1	88.9	1,000.00	79.8	69.4	J2023	2,794.80	0
J2077	2.1	92.7	1,000.00	81.6	68.7	J2023	2,794.80	0
J2078	2.1	76.4	1,000.00	72.4	43	J2549	3,012.80	0
J2079	2.1	76.1	1,000.00	72.1	21.9	J2549	3,011.00	0
J208	2.9	69.3	1,000.00	57.5	20	J219	1,345.30	0
J2080	2.1	74.1	1,000.00	70.3	42.6	J2549	2,999.20	0
J2081	2.1	73.3	1,000.00	69.5	33	J2549	3,006.90	0
J2082	2.1	73.2	1,000.00	69.4	48.2	J2549	3,027.60	0
J2083	2.1	73.6	1,000.00	69.6	63.3	J2549	3,005.90	0
J2084	2.1	73.2	1,000.00	69.2	36.7	J2549	3,000.10	0
J2085	2.1	69.6	1,000.00	65.4	20	J2549	3,000.60	0
J2086	2.1	68.7	1,000.00	63.6	35.4	J2549	3,002.20	0
J2087	2.1	65.8	1,000.00	61	45.9	J2091	2,896.10	0
J2088	2.1	65.1	1,000.00	60.1	54.8	J2091	2,800.40	0
J2089	2.1	66.7	1,000.00	62.2	51.1	J2549	3,000.70	0
J209	2.9	68.3	1,000.00	56.4	20	J219	1,340.60	0
J2090	2.1	67.7	1,000.00	63.3	20	J2549	3,000.70	0
J2091	2.1	47.3	1,000.00	39.2	29.8	J2091	2,028.20	0
J2092	2.1	77.6	1,000.00	71.4	46.4	J2023	2,621.00	0
J2093	2.1	77.4	1,000.00	72	20	J2023	2,818.80	0
J2094	2.1	78	1,000.00	72.5	51.2	J2023	2,785.70	0
J2095	2.1	77.7	1,000.00	72.3	20	J2023	2,801.80	0
J2096	2.1	84.5	1,000.00	81.1	60.3	J2549	2,814.00	0
J2097	2.1	85.1	1,000.00	81	76.8	J2549	2,814.00	0
J2098	2.1	88.6	1,000.00	83.5	78	J2549	2,814.00	0
J2099	2.1	84.4	1,000.00	79.1	73.3	J2549	2,814.00	0
J21	2.9	44.7	1,000.00	35.7	24.7	J21	1,759.00	0
J210	2.9	68.4	1,000.00	56.7	20	J219	1,355.80	0
J2100	2.1	92.3	1,000.00	89.6	76.9	J2549	2,582.90	0
J2101	2.1	92.7	1,000.00	90.1	55	J2549	2,537.10	0
J2102	2.1	90.4	1,000.00	86.4	76	J2549	2,647.40	0
J2103	2.1	91.5	1,000.00	89	59.9	J2549	2,464.00	0
J2104	2.1	91	1,000.00	88.6	45.6	J2549	2,457.00	0
J2105	2.1	88	1,000.00	85.6	43.5	J2549	2,442.30	0

ID	Static Demand (gpm)	Static Pressure (psi)	Fire-Flow Demand (gpm)	Residual Pressure (psi)	Minimum System Pressure (psi)	Critical Available Node ID	Design Flow (gpm)	Fire Flow Deficit (gpm)
J2106	2.1	85.1	1,000.00	82.6	43.9	J2549	2,382.20	0
J2107	2.1	83.3	1,000.00	80.8	43.5	J2549	2,367.20	0
J2108	2.1	71.8	1,000.00	66.5	61.5	J2549	2,665.00	0
J2109	2.1	62.7	1,000.00	57.1	48.6	J2549	2,755.50	0
J211	2.9	70.6	1,000.00	59.3	20	J219	1,367.50	0
J2110	2.1	64	1,000.00	50.3	53.1	J2110	1,927.70	0
J2111	2.1	60.4	1,000.00	54.8	43.5	J2549	2,795.30	0
J2112	2.1	60.5	1,000.00	54.3	50.6	J2549	2,840.80	0
J2113	2.1	53.7	1,000.00	45.5	38.7	J2113	2,257.20	0
J2114	2.1	51.1	1,000.00	42.1	31	J2114	2,042.00	0
J2115	2.1	46.8	2,500.00	2.2	26.5	J2115	1,879.70	620.3
J2116	2.1	45.9	2,500.00	7.8	32.2	J2116	2,012.70	487.3
J2118	2.1	45.5	2,500.00	11.9	20	J2118	2,137.60	362.4
J212	2.9	74.2	1,000.00	61.8	29.6	J219	1,326.40	0
J2120	2.1	50.3	2,500.00	14.9	20	J2117	2,178.70	321.3
J2121	2.1	47.7	2,500.00	13	20	J2119	2,170.80	329.2
J2122	2.1	51.1	2,500.00	17.1	20	J2119	2,193.30	306.7
J2123	2.1	56.1	2,500.00	22	20	J2119	2,253.90	246.1
J2124	2.1	49.7	2,500.00	15.4	20	J2119	2,185.70	314.3
J2126	2.1	55.8	2,500.00	22.9	20	J2119	2,216.40	283.6
J2128	2.1	75.9	2,500.00	47.2	53.9	J2119	2,332.80	167.2
J2129	2.1	91.6	1,000.00	86.4	48.8	J2119	2,691.40	0
J213	2.9	81.7	1,000.00	71.4	48.4	J219	1,443.30	0
J2130	2.1	91.2	1,000.00	85.4	65.5	J2119	2,864.70	0
J2131	2.1	89.8	1,000.00	83.8	61.3	J2119	2,966.70	0
J2132	2.1	90	1,000.00	83.9	60.7	J2119	2,992.30	0
J2133	2.1	85.1	1,000.00	78.7	51.4	J2119	3,156.50	0
J2134	2.1	88.1	1,000.00	81.4	45.7	J2119	3,510.20	0
J2135	2.1	88.4	1,000.00	81.7	46.9	J2549	3,604.80	0
J2137	2.1	88.3	1,000.00	81.7	51.8	J2549	3,735.40	0
J2138	2.1	86.5	1,000.00	78.1	69	J2138	3,408.60	0
J2139	2.1	86.6	1,000.00	75.8	63.5	J2139	2,880.20	0
J214	2.9	45.8	1,000.00	29.9	20	J219	1,139.10	0
J2141	2.1	60.3	1,000.00	53.6	48.9	J2141	2,799.70	0
J2142	2.1	60.4	1,000.00	52.4	42.8	J2143	2,279.60	0
J2143	2.1	54.3	1,000.00	34.4	38.6	J2143	1,353.40	0
J2144	2.1	60.8	1,000.00	52.5	40	J2143	2,443.90	0
J2145	2.1	61	1,000.00	52.7	39.1	J2145	2,454.10	0
J2146	2.1	61.8	1,000.00	53.8	44.9	J2147	2,403.50	0
J2147	2.1	57.8	1,000.00	39	42.9	J2147	1,469.60	0

ID	Static Demand (gpm)	Static Pressure (psi)	Fire-Flow Demand (gpm)	Residual Pressure (psi)	Minimum System Pressure (psi)	Critical Available Node ID	Design Flow (gpm)	Fire Flow Deficit (gpm)
J2148	2.1	60	1,000.00	53.8	50.3	J2169	2,165.80	0
J2149	2.1	49.4	1,000.00	45.7	37.1	J2169	1,881.50	0
J215	2.9	44.2	1,000.00	28.2	20	J219	1,137.60	0
J2150	2.1	47	1,000.00	43.5	35.7	J2169	1,861.60	0
J2151	2.1	44.3	1,000.00	41	34.1	J2169	1,842.10	0
J2152	2.1	54.1	1,000.00	45.8	35.5	J2169	1,842.10	0
J2153	2.1	82.6	3,000.00	69.2	67	J2549	4,698.70	0
J2154	2.1	82.8	3,000.00	70.1	65.2	J2549	4,760.50	0
J2156	2.1	80.4	3,000.00	63.9	68	J2549	4,784.80	0
J2157	2.1	81.6	1,000.00	76.9	61.2	J2549	4,771.00	0
J2158	2.1	74.9	1,000.00	69.8	50.7	J2160	4,514.90	0
J2159	2.1	74.5	1,000.00	68.9	65.5	J2160	4,133.20	0
J216	2.9	38.6	1,000.00	23.9	20	J219	1,147.50	0
J2160	2.1	61.3	1,000.00	51.3	42	J2160	2,519.40	0
J2161	2.1	62.6	1,000.00	56.8	31.2	J2162	4,030.00	0
J2162	2.1	61.7	1,000.00	55.5	51.4	J2162	3,819.70	0
J2163	2.1	80.1	1,000.00	66.6	53	J2163	2,511.50	0
J2164	2.1	89	1,000.00	69.2	47.5	J2164	2,105.50	0
J2165	2.1	82.9	1,000.00	75.3	32.6	J2166	3,387.20	0
J2166	2.1	66.4	1,000.00	58.1	20	J2166	3,153.30	0
J2168	2.1	23.3	1,000.00	22.2	20	J2168	2,026.00	0
J2169	2.1	24	1,000.00	22.3	20	J2169	1,705.10	0
J217	2.9	38.6	1,000.00	24.3	20	J219	1,150.40	0
J2174	2.1	43	1,000.00	40	20	J2174	3,815.50	0
J2175	2.1	44.3	1,000.00	41.2	36.5	J2175	3,820.20	0
J2176	2.1	42.4	1,000.00	33.1	26.2	J2176	1,661.40	0
J2177	2.1	40.7	1,000.00	30.2	20	J2177	1,473.80	0
J2178	2.1	41.2	1,000.00	30.5	20	J2179	1,421.70	0
J2179	2.1	39.7	1,000.00	21.2	25	J2179	1,038.90	0
J218	2.9	38.7	1,000.00	24.1	20	J219	1,132.00	0
J2180	2.1	35.3	1,000.00	27.2	20	J2180	2,191.50	0
J2181	2.1	55.9	1,000.00	48.5	20.4	J2180	2,401.10	0
J2182	2.1	56.3	1,000.00	47.1	53.6	J2180	2,485.60	0
J2183	2.1	63.1	1,000.00	41.7	51.6	J2183	1,485.70	0
J2184	2.1	63.9	1,000.00	42.2	51.4	J2184	1,489.60	0
J2185	2.1	65.5	1,000.00	43.6	51.8	J2185	1,513.00	0
J2186	2.1	57.9	1,000.00	48	42.3	J2186	2,567.10	0
J2187	2.1	61.9	1,000.00	50.1	37.1	J2187	2,285.00	0
J2188	2.1	63.9	1,000.00	50.9	45.2	J2188	2,170.00	0
J2189	2.1	68.7	1,000.00	53.1	41	J2189	1,989.00	0

ID	Static Demand (gpm)	Static Pressure (psi)	Fire-Flow Demand (gpm)	Residual Pressure (psi)	Minimum System Pressure (psi)	Critical Available Node ID	Design Flow (gpm)	Fire Flow Deficit (gpm)
J219	2.9	37.6	1,000.00	22.8	20	J219	1,118.90	0
J2190	2.1	86.9	1,000.00	69.5	48.1	J2189	2,234.40	0
J2191	2.1	91.4	1,000.00	73.8	46.1	J2192	2,195.60	0
J2192	2.1	86	1,000.00	61	66.2	J2192	1,733.30	0
J2194	2.1	92.7	1,000.00	75.1	47.8	J2201	2,138.90	0
J2195	2.1	95.3	1,000.00	78.1	58.1	J2201	1,970.20	0
J2196	2.1	95.5	1,000.00	78.6	37	J2201	1,917.00	0
J2197	2.1	93.5	1,000.00	66.5	72.6	J2201	1,437.70	0
J2198	2.1	94.4	1,000.00	65.7	72.1	J2201	1,387.70	0
J2199	2.1	88.2	1,000.00	55	62	J2201	1,277.70	0
J220	2.9	42.4	1,000.00	28.8	20	J219	1,191.20	0
J2200	2.1	72.3	1,000.00	24	34.1	J2201	1,033.10	0
J2202	2.1	95.3	1,000.00	47.7	57.8	J2203	1,283.60	0
J2203	2.1	94.3	1,000.00	42.5	53.4	J2203	1,225.00	0
J2204	2.1	94.5	1,000.00	35.6	47.8	J2204	1,140.60	0
J2205	2.1	94.3	1,000.00	77.7	20	J2201	1,974.00	0
J2206	2.1	96.4	1,000.00	80.5	68.6	J2201	2,084.00	0
J2207	2.1	94.8	1,000.00	82.5	78.4	J2201	2,644.10	0
J2208	2.1	87.7	1,000.00	66.1	70.5	J2209	1,881.80	0
J2209	2.1	86.1	1,000.00	36.3	76.9	J2209	1,171.40	0
J221	2.9	42.5	1,000.00	29	20	J219	1,202.50	0
J2210	2.1	97.3	1,000.00	89.7	64.2	J2180	3,690.40	0
J2211	2.1	97.5	1,000.00	87.7	82.1	J2211	3,515.80	0
J2212	2.1	96.3	1,000.00	85.5	76.4	J2213	3,184.90	0
J2213	2.1	95.3	1,000.00	76.9	80.7	J2213	2,234.10	0
J2214	2.1	94.8	1,000.00	87.9	64.7	J2180	3,711.40	0
J2215	2.1	92.9	1,000.00	86.1	64.8	J2180	3,731.30	0
J2216	2.1	83.4	1,000.00	53.9	69.9	J2216	1,533.00	0
J2217	2.1	87.7	1,000.00	81.4	65	J2180	3,789.10	0
J2218	2.1	87.3	1,000.00	81.1	65.2	J2220	3,794.00	0
J2219	2.1	76.4	1,000.00	-18.9	59.3	J2220	690.90	309.1
J222	2.9	47.3	1,000.00	32.5	20	J219	1,166.60	0
J2221	2.1	77.5	1,000.00	72.2	51.7	J2549	3,834.30	0
J2222	2.1	76.9	1,000.00	63.4	71.8	J2222	2,284.70	0
J2223	2.1	72	1,000.00	55.6	64.2	J2223	1,929.00	0
J2224	2.1	70.5	1,000.00	55.6	52.5	J2224	2,009.90	0
J2225	2.1	73.6	1,000.00	64.4	70.8	J2225	2,943.10	0
J2226	2.1	73.9	1,000.00	67	50.5	J2226	3,688.20	0
J2228	2.1	88.8	1,000.00	76.9	57.7	J2229	2,759.10	0
J2229	2.1	84.9	1,000.00	73	54.6	J2229	2,700.40	0

ID	Static Demand (gpm)	Static Pressure (psi)	Fire-Flow Demand (gpm)	Residual Pressure (psi)	Minimum System Pressure (psi)	Critical Available Node ID	Design Flow (gpm)	Fire Flow Deficit (gpm)
J223	2.9	43.8	1,000.00	29.3	20	J219	1,196.30	0
J2230	2.1	78.9	1,000.00	69.4	64.2	J2230	2,938.10	0
J2231	2.1	78.8	1,000.00	70.9	63.9	J2231	3,348.30	0
J2232	2.1	73.3	1,000.00	48.5	57.7	J2232	1,537.10	0
J2233	2.1	73.5	1,000.00	48.9	59.4	J2233	1,547.20	0
J2234	2.1	82.2	1,000.00	-42.7	59.9	J2234	685.80	314.2
J2235	2.1	82.6	1,000.00	76.9	75.2	J2549	3,295.80	0
J2236	2.1	82.8	1,000.00	77.8	64.8	J2549	3,236.60	0
J2237	2.1	71.6	1,000.00	66.8	45.9	J2549	3,810.50	0
J2238	2.1	71	1,000.00	66.2	46	J2549	3,808.30	0
J2239	2.1	65.6	1,000.00	49.6	48.4	J2239	1,816.60	0
J224	2.9	46.5	1,000.00	29.8	20	J219	1,196.30	0
J2240	2.1	63.6	1,000.00	42.3	53.6	J2240	1,498.60	0
J2241	2.1	53.3	1,000.00	44.7	33.2	J2241	2,542.30	0
J2242	2.1	51.6	1,000.00	43.8	28.7	J2243	2,445.30	0
J2243	2.1	50.6	1,000.00	42.8	32.1	J2243	2,389.40	0
J2244	2.1	48.2	1,000.00	41.1	35.7	J2244	2,308.40	0
J2245	2.1	79.5	1,000.00	75.6	67	J2549	3,060.90	0
J2246	2.1	64.3	1,000.00	59.8	41.9	J2549	3,773.70	0
J2247	2.1	63	1,000.00	52.2	59.7	J2247	2,216.60	0
J2248	2.1	79.1	1,000.00	76	49.8	J2549	2,892.70	0
J2249	2.1	78.8	1,000.00	75.6	67.7	J2549	2,906.30	0
J225	2.9	44.1	1,000.00	25.9	20	J225	1,186.40	0
J2250	2.1	74.7	1,000.00	71.3	60.5	J2549	3,016.20	0
J2251	2.1	58.3	1,000.00	54.1	48.3	J2549	3,710.30	0
J2252	2.1	57.5	1,000.00	53.8	39.7	J2549	3,751.70	0
J2253	2.1	56.2	1,000.00	52.6	38.9	J2549	3,696.30	0
J2254	2.1	56	1,000.00	51.7	42.3	J2254	3,964.90	0
J2255	2.1	53	1,000.00	49.2	34.1	J2256	3,864.80	0
J2256	2.1	47.4	1,000.00	42.8	34	J2256	3,186.50	0
J2257	2.1	52.1	1,000.00	49.1	20	J2549	4,005.40	0
J2258	2.1	51.8	1,000.00	48.7	41.5	J2549	4,117.00	0
J2259	2.1	49	1,000.00	45.8	36	J2549	4,279.70	0
J226	2.9	45.7	1,000.00	31.5	20	J219	1,208.50	0
J2260	2.1	54.1	1,000.00	50.7	36	J2549	3,794.40	0
J2261	2.1	56	1,000.00	52.6	44.1	J2549	3,654.80	0
J2262	2.1	55.9	1,000.00	52.7	30.9	J2549	3,638.50	0
J2263	2.1	59.5	1,000.00	55.7	38.8	J2549	3,377.10	0
J2264	2.1	55.4	1,000.00	52.1	40.8	J2549	3,593.10	0
J2265	2.1	43.7	1,000.00	40.6	30.3	J2265	3,839.10	0

ID	Static Demand (gpm)	Static Pressure (psi)	Fire-Flow Demand (gpm)	Residual Pressure (psi)	Minimum System Pressure (psi)	Critical Available Node ID	Design Flow (gpm)	Fire Flow Deficit (gpm)
J2266	2.1	46	1,000.00	42.6	35.9	J2266	3,771.30	0
J2267	2.1	85.2	1,000.00	80.1	78.1	J2549	2,708.00	0
J2268	2.1	84.2	1,000.00	77.8	79.1	J2549	2,708.00	0
J2269	2.1	94.5	1,000.00	87.5	79.4	J2549	2,498.80	0
J227	2.9	47	1,000.00	32.9	20	J219	1,213.00	0
J2270	2.1	94.6	1,000.00	87.5	78.1	J2549	2,474.00	0
J2271	2.1	97.1	1,000.00	83.1	85.9	J2549	2,498.80	0
J2272	2.1	94.8	1,000.00	88.6	84.1	J2549	2,317.90	0
J2273	2.1	96.9	1,000.00	82.7	85.6	J2549	2,317.90	0
J2274	2.1	97.5	1,000.00	78.4	82.4	J2274	2,186.40	0
J2275	2.1	94.9	1,000.00	89.2	86.2	J2549	2,285.60	0
J2276	2.1	94.6	1,000.00	90	88.8	J2549	2,241.90	0
J2277	2.1	94.4	1,000.00	90.6	89.9	J2549	2,225.50	0
J2278	2.1	94.5	1,000.00	91.7	63.4	J2549	2,208.50	0
J2279	2.1	88.6	1,000.00	85.8	37.4	J2549	2,207.70	0
J228	2.9	52.6	1,000.00	39	20	J219	1,225.50	0
J2280	2.1	85.1	1,000.00	82.4	41.4	J2549	2,207.50	0
J2281	2.1	77.2	1,000.00	74.6	43.4	J2549	2,209.10	0
J2282	2.1	72.6	1,000.00	70.1	43.4	J2549	2,211.90	0
J2285	2.1	67.8	1,000.00	65.3	24.6	J2549	2,231.30	0
J2286	2.1	93.6	1,000.00	90.6	81.6	J2549	2,200.90	0
J2287	2.1	82.2	1,000.00	52.7	69.9	J2287	1,514.70	0
J2288	2.1	79.1	1,000.00	46.7	63.8	J2288	1,398.20	0
J2289	2.1	62.4	1,000.00	58.7	41	J2549	2,590.30	0
J229	2.9	60.4	1,000.00	47.3	20	J219	1,241.70	0
J2290	2.1	62.5	1,000.00	58.9	46	J2549	2,447.70	0
J2291	2.1	62.3	1,000.00	58.8	46.8	J2549	2,427.30	0
J2292	2.1	54.8	1,000.00	41.4	44.3	J2294	1,621.00	0
J2293	2.1	53.6	1,000.00	38.8	41.8	J2293	1,601.10	0
J2296	2.1	59.6	1,000.00	57.4	54.5	J2549	2,184.40	0
J2297	2.1	56.3	1,000.00	49.9	44.6	J2297	2,793.70	0
J2298	2.1	57.8	1,000.00	51	42.7	J2298	2,746.40	0
J2299	2.1	60	1,000.00	53.3	46.4	J2299	2,868.70	0
J23	2.9	34.6	1,000.00	30.7	20.7	J23	2,142.30	0
J230	2.9	53.1	1,000.00	40.1	20	J219	1,242.70	0
J2300	2.1	60	1,000.00	56.6	36.4	J2549	3,348.90	0
J2301	2.1	58.5	1,000.00	55	41.2	J2549	3,474.80	0
J2302	2.1	49.9	1,000.00	43.9	37.7	J2303	2,475.90	0
J2303	2.1	47	1,000.00	39.6	31.6	J2303	2,164.50	0
J2304	2.1	59.9	1,000.00	56.4	44	J2549	3,424.40	0

ID	Static Demand (gpm)	Static Pressure (psi)	Fire-Flow Demand (gpm)	Residual Pressure (psi)	Minimum System Pressure (psi)	Critical Available Node ID	Design Flow (gpm)	Fire Flow Deficit (gpm)
J2308	2.1	80.2	3,000.00	56.3	70.5	J2308	4,755.70	0
J2309	1.8	76.3	1,500.00	70.1	55.4	J2549	4,848.40	0
J231	2.9	52.5	1,000.00	39.5	20	J219	1,242.70	0
J2310	2.1	78.6	3,500.00	53.5	63	J1152	4,840.70	0
J2311	2.1	79.3	3,500.00	57.6	67.1	J2549	4,835.00	0
J2312	2.1	78.8	1,000.00	74.1	59.3	J1152	4,715.30	0
J2313	2.1	80.8	3,000.00	58.4	58.1	J1152	4,519.10	0
J2314	2.1	79.1	3,000.00	57.6	61.1	J1152	4,290.40	0
J2315	2.1	75.5	3,000.00	55.9	61.4	J1152	4,077.60	0
J2316	2.1	73.3	3,000.00	55.1	61.2	J1152	3,961.70	0
J2317	2.1	79	3,000.00	48.5	68.6	J1152	3,961.70	0
J2318	2.1	73.3	3,000.00	60.1	66.2	J1152	3,649.70	0
J2319	2.1	74.7	3,000.00	65.3	70.1	J1152	3,555.10	0
J232	2.9	54.5	1,000.00	41.7	20	J219	1,248.90	0
J2320	2.1	75.3	3,000.00	69.8	59.4	J1152	3,447.50	0
J2321	2.1	74.1	3,000.00	68.7	54.2	J1152	3,220.70	0
J2322	2.1	73.7	3,000.00	68.4	51	J1152	3,139.90	0
J2324	2.1	70.5	3,000.00	65.3	55.8	J1152	2,912.30	87.7
J2325	2.1	76.7	3,000.00	66.8	67.4	J1152	3,262.90	0
J2326	2.1	79.1	3,000.00	74	65.7	J1152	3,670.40	0
J2327	2.1	79.1	3,000.00	73.8	69.8	J2549	3,826.00	0
J2328	2.1	79.4	3,000.00	73.8	74.4	J2549	3,815.90	0
J2329	2.1	80	3,000.00	70.8	74.7	J2549	3,747.00	0
J233	2.9	55.2	1,000.00	42.6	20	J219	1,251.90	0
J2330	2.1	66.7	3,000.00	55.6	51.7	J2549	3,305.50	0
J2331	2.1	74.1	3,000.00	63.2	65.1	J2549	3,248.60	0
J2332	2.1	75.3	3,000.00	66	69.2	J2549	3,231.30	0
J2333	2.1	62.7	3,000.00	46.3	50.6	J2549	3,270.40	0
J2334	2.1	64.8	3,000.00	30.8	53.9	J2549	3,270.40	0
J2335	2.1	69	3,000.00	26.3	55.4	J2335	3,241.50	0
J2336	2.1	70.2	3,000.00	22.4	55.1	J2336	3,082.00	0
J2337	2.1	75.3	3,000.00	67.4	49.7	J2549	3,231.00	0
J2338	2.1	76.6	3,000.00	68.1	61.7	J2549	3,161.90	0
J2339	2.1	77.3	3,000.00	68.6	60.6	J2549	3,121.70	0
J234	2.9	76.9	1,000.00	64	20	J219	1,284.90	0
J2340	2.1	76.7	3,000.00	68.2	59.6	J2549	3,313.50	0
J2341	2.1	76.8	3,000.00	68.3	59.2	J2549	3,321.50	0
J2342	2.1	77.9	3,000.00	69.3	60.7	J2549	3,381.50	0
J2343	2.1	78.4	3,000.00	70.2	64.7	J2549	3,429.20	0
J2344	2.1	78.1	3,000.00	70.7	68	J2549	3,467.60	0

ID	Static Demand (gpm)	Static Pressure (psi)	Fire-Flow Demand (gpm)	Residual Pressure (psi)	Minimum System Pressure (psi)	Critical Available Node ID	Design Flow (gpm)	Fire Flow Deficit (gpm)
J2345	2.1	77.3	3,000.00	71.8	54.3	J2549	3,586.00	0
J2346	2.1	75.7	3,000.00	65	69.1	J2549	3,417.80	0
J2347	2.1	45.1	3,000.00	31.9	34.9	J2549	3,349.50	0
J2348	2.1	56.1	3,000.00	42	43.1	J2549	3,297.90	0
J2349	2.1	77.7	3,000.00	63.9	65.9	J2549	3,183.20	0
J235	2.9	82.8	1,000.00	74.4	47.7	J219	1,861.80	0
J2350	2.1	78.3	3,000.00	66.4	61.4	J2549	3,092.00	0
J2351	2.1	78.1	3,000.00	65.9	66.3	J2549	3,087.30	0
J2352	2.1	75	3,000.00	58.1	63.1	J2549	2,995.70	4.3
J2353	2.1	75.7	3,000.00	58.1	62.5	J2549	2,978.80	21.2
J2354	2.1	75.5	3,000.00	57.2	60.9	J2549	2,957.90	42.1
J2355	2.1	74.9	3,000.00	55.7	57.7	J2549	2,921.40	78.6
J2356	2.1	77.4	3,000.00	66.5	69.6	J2549	3,086.30	0
J2357	2.1	77.1	3,000.00	67.9	66.4	J2549	3,095.30	0
J2358	2.1	74.2	3,000.00	63.9	58.8	J2549	3,027.10	0
J2359	2.1	73.2	3,000.00	60.1	63.1	J2549	2,926.90	73.1
J236	2.9	73	1,000.00	61.8	20	J219	1,385.60	0
J2360	2.1	67	1,000.00	64.6	55.7	J2549	2,515.20	0
J2361	2.1	72.8	3,000.00	58.6	58.5	J2549	2,769.90	230.1
J2363	2.1	76.5	3,000.00	69.8	63.1	J2549	3,677.10	0
J2364	2.1	74.4	3,000.00	60.1	69.5	J2549	3,677.10	0
J2365	2.1	77.9	3,000.00	71.6	67.1	J2549	3,640.90	0
J2367	2.1	76.5	3,000.00	68	72.4	J2549	3,897.50	0
J2368	2.1	76.9	3,000.00	66.9	71.8	J2549	3,987.60	0
J2369	2.1	76.7	3,000.00	64.4	72.3	J2549	3,987.60	0
J237	2.9	75.5	1,000.00	62.4	53.9	J219	1,344.80	0
J2370	2.1	77.7	3,000.00	64.5	69.5	J2549	4,169.50	0
J2371	2.1	78	3,000.00	63.9	68.7	J2549	4,219.50	0
J2373	2.1	78.7	3,000.00	61.9	61.8	J2549	4,604.60	0
J2374	2.1	59.5	1,000.00	57.4	42.1	J2549	2,173.30	0
J2375	2.1	62.8	1,000.00	60.3	53.4	J2549	2,161.10	0
J2376	2.1	69.6	1,000.00	67.1	56.8	J2549	2,157.10	0
J2377	2.1	77.8	1,000.00	75	64.5	J2549	2,162.00	0
J2378	2.1	82.2	1,000.00	79.5	61.4	J2549	2,166.70	0
J2379	2.1	71.6	1,000.00	56.3	56.8	J2379	1,988.80	0
J238	2.9	81.2	1,000.00	71	48.8	J219	1,454.90	0
J2380	2.1	77.9	1,000.00	62.6	70.8	J2380	2,114.40	0
J2381	2.1	82.5	1,000.00	79.8	73.1	J2549	2,168.30	0
J2382	2.1	81.8	1,000.00	79	71.8	J2549	2,165.10	0
J2383	2.1	75.6	1,000.00	73	41.3	J2549	2,151.10	0

ID	Static Demand (gpm)	Static Pressure (psi)	Fire-Flow Demand (gpm)	Residual Pressure (psi)	Minimum System Pressure (psi)	Critical Available Node ID	Design Flow (gpm)	Fire Flow Deficit (gpm)
J2384	2.1	71.7	1,000.00	68.7	58.9	J2549	2,108.40	0
J2385	2.1	62.5	1,000.00	59.6	43.5	J2549	2,209.60	0
J2386	2.1	60.5	1,000.00	57.4	43.4	J2549	2,195.00	0
J2387	2.1	52.6	1,000.00	49.8	27	J2549	2,176.40	0
J2388	2.1	57.1	1,000.00	54.4	45.1	J2549	2,095.00	0
J2389	2.1	63.9	1,000.00	61.1	44.6	J2549	2,008.00	0
J2390	2.1	68.5	1,000.00	65.5	55.4	J2549	2,041.00	0
J2391	2.1	63	1,000.00	60.2	52.8	J2549	1,866.60	0
J2392	2.1	63.9	1,000.00	60.9	50.6	J2549	1,765.10	0
J2393	2.1	33.2	1,000.00	30.7	20	J2549	1,228.30	0
J2394	2.1	37.1	1,000.00	34.2	24.2	J2549	1,357.30	0
J2397	2.1	25.1	1,000.00	22.7	20	J2405	403.60	596.4
J24	2.9	35.5	1,000.00	31.9	23.5	J25	2,195.90	0
J2402	2.1	33.6	1,000.00	30.1	20	J2405	328.60	671.4
J2403	2.1	37.2	1,000.00	33.8	21.2	J2405	346.40	653.6
J2404	2.1	44.3	1,000.00	39.4	33.5	J2405	346.40	653.6
J2405	2.1	20.6	1,000.00	17	20	J2405	308.50	691.5
J2406	2.1	70.2	1,000.00	67.6	53.5	J2549	2,188.20	0
J2407	2.1	72.6	1,000.00	69.8	57.5	J2549	2,165.20	0
J2408	2.1	74.3	1,000.00	71.4	60.4	J2549	2,162.20	0
J2409	2.1	70.3	1,000.00	66.9	52.8	J2549	2,163.40	0
J2410	2.1	59.8	1,000.00	56.3	47.7	J2549	2,197.00	0
J2411	2.1	59	1,000.00	55.1	39.6	J2549	2,183.80	0
J2412	2.1	52.3	1,000.00	48.3	28.3	J2549	2,175.70	0
J2413	2.1	45.4	1,000.00	41.7	29	J2549	2,166.60	0
J2414	2.1	59.1	1,000.00	56.4	32.6	J2549	2,180.80	0
J2415	2.1	59.5	1,000.00	56.7	44.7	J2549	2,190.50	0
J2416	2.10	59.4	1,000.00	56.5	48.2	J2549	2,192.30	0
J2417	2.1	59.5	1,000.00	56.6	40.4	J2549	2,198.10	0
J2418	2.1	59.5	1,000.00	56.5	48.3	J2549	2,197.10	0
J2419	2.1	60.8	1,000.00	57.5	45.4	J2549	2,196.20	0
J2420	2.1	59.7	1,000.00	56.7	32.7	J2549	2,197.80	0
J2421	2.1	59.7	1,000.00	56.7	46.9	J2549	2,197.40	0
J2422	2.1	58.1	1,000.00	55.3	38.3	J2549	2,184.40	0
J2423	2.1	55.4	1,000.00	52.7	34.7	J2549	2,209.00	0
J2424	2.1	64.3	1,000.00	61.9	20	J2549	2,256.90	0
J2425	2.1	66.5	1,000.00	64.1	20	J2549	2,273.70	0
J2426	2.1	55.2	1,000.00	52.5	29.7	J2549	2,140.90	0
J2427	2.1	63.2	1,000.00	60.1	49.5	J2549	2,196.20	0
J2428	2.1	64.6	1,000.00	62.2	35.7	J2549	2,284.60	0

ID	Static Demand (gpm)	Static Pressure (psi)	Fire-Flow Demand (gpm)	Residual Pressure (psi)	Minimum System Pressure (psi)	Critical Available Node ID	Design Flow (gpm)	Fire Flow Deficit (gpm)
J2429	2.1	84.4	1,000.00	82	24.5	J2549	2,373.70	0
J2430	2.1	61.2	1,000.00	57.9	46.5	J2549	2,320.20	0
J2431	2.1	57.1	1,000.00	46.9	49	J2431	2,102.60	0
J2432	2.1	57.3	1,000.00	46.2	33.1	J2432	2,000.30	0
J2433	2.1	57.8	1,000.00	45.5	31	J2433	1,899.60	0
J2434	2.1	71.4	1,000.00	68.9	57.1	J2549	2,157.00	0
J2435	2.1	69.3	1,000.00	66.3	57.1	J2549	2,155.50	0
J25	2.9	33.9	1,000.00	28.3	21.6	J25	1,674.70	0
J2507	3.7	83.2	1,000.00	77.4	54	J2180	3,830.40	0
J2508	3.7	88.3	1,000.00	81.2	73.9	J2220	3,795.60	0
J2513	3	70.3	1,000.00	43.8	20	J2515	1,178.60	0
J2514	3	55.1	1,000.00	26.8	20	J2514	1,133.50	0
J2515	3	55.1	1,000.00	26.6	20	J2515	1,128.40	0
J2516	3	66	1,000.00	38.3	20	J2515	1,158.70	0
J2517	3	63.8	1,000.00	34.8	20	J2515	1,158.70	0
J2526	3.5	58.7	1,000.00	52	37.9	J2526	3,092.60	0
J2527	3.5	74.6	1,000.00	68.4	41.5	J2529	3,003.30	0
J2528	3.5	63.4	1,000.00	57.2	20	J2529	2,986.70	0
J2529	3.5	52.8	1,000.00	45.8	20	J2529	2,622.20	0
J2531	3.5	81.3	1,000.00	76.2	70.8	J2529	3,008.30	0
J2534	3.5	111.8	1,000.00	101.2	91	J2538	3,248.40	0
J2535	3.5	117	1,000.00	104.6	75.9	J2538	3,080.00	0
J2536	3.5	103.1	1,000.00	89.6	41.5	J2538	2,933.80	0
J2537	3.5	94.4	1,000.00	80.4	20	J2537	2,736.60	0
J2538	3.5	90.1	1,000.00	76.2	20	J2538	2,666.40	0
J2539	3.5	98.8	1,000.00	85.9	50.3	J2538	2,890.40	0
J2549	2.1	23.6	1,000.00	20.7	20	J2405	371.10	628.9
J3	2.9	68.2	1,000.00	45.3	20	J2	1,189.50	0
J3001	8.6	43.1	3,000.00	36	39.1	J3001	6,613.10	0
J3002	8.6	43.4	1,000.00	41.5	38.9	J3002	6,246.00	0
J3003	8.6	53.4	1,000.00	50.8	47.3	J3022	5,179.30	0
J3004	8.6	64.1	1,000.00	61.1	46.6	J3022	4,846.60	0
J3005	8.6	66.2	1,000.00	63	45.9	J3022	4,767.40	0
J3006	8.6	73.1	1,000.00	69.8	50.6	J3022	4,712.20	0
J3007	8.6	74.7	1,000.00	71.3	51.2	J3022	4,692.90	0
J3008	8.6	73.1	1,000.00	69.6	44	J3022	4,582.20	0
J3009	8.6	79.4	1,000.00	75.4	61.4	J3022	4,582.20	0
J3010	8.6	81.8	1,000.00	76.6	56.9	J3022	4,582.20	0
J3011	8.6	58.2	1,000.00	55.5	47.6	J3022	5,039.20	0
J3012	8.6	62.4	3,000.00	49.1	45.9	J3022	4,477.80	0

ID	Static Demand (gpm)	Static Pressure (psi)	Fire-Flow Demand (gpm)	Residual Pressure (psi)	Minimum System Pressure (psi)	Critical Available Node ID	Design Flow (gpm)	Fire Flow Deficit (gpm)
J3013	8.6	59.2	3,000.00	44.4	37.6	J3022	4,145.90	0
J3014	8.6	58.9	3,000.00	43.2	33.5	J3022	3,975.70	0
J3015	8.6	56.2	3,000.00	39.8	42	J3022	3,842.80	0
J3016	8.6	50.4	3,000.00	31.7	34.2	J3022	3,519.50	0
J3017	8.6	48.2	3,000.00	28.6	30.4	J3022	3,519.50	0
J3018	8.6	45.2	3,000.00	24.5	20	J3022	3,277.30	0
J3019	8.6	46.6	1,000.00	41.8	20	J3022	3,108.50	0
J3020	8.6	45.3	1,000.00	40.3	20	J3022	2,971.40	0
J3021	8.6	44.4	1,000.00	39.2	20	J3022	2,831.10	0
J3022	8.6	43.6	1,000.00	38	20	J3022	2,704.10	0
J3023	8.6	46.2	1,000.00	40.3	20	J3022	2,704.10	0
J3024	8.6	53.1	1,000.00	48.1	22	J3022	3,108.50	0
J3025	8.6	50.3	1,000.00	44.9	20	J3022	3,108.50	0
J3026	8.6	45.9	1,000.00	40.6	24.4	J3026	3,185.70	0
J3027	8.6	51.5	2,250.00	31.7	24.2	J3027	3,095.30	0
J3028	8.6	65.3	3,000.00	30.3	33.3	J3027	3,095.20	0
J3029	8.6	66.9	3,000.00	30.4	33.3	J3027	3,095.20	0
J3030	8.6	69.9	3,000.00	32.3	22.8	J3027	3,095.20	0
J3031	8.6	69	3,000.00	31.5	34.7	J3027	3,095.20	0
J3032	8.6	65.3	3,000.00	49.1	20.6	J3022	4,075.50	0
J3033	8.6	64.6	3,000.00	48.3	20	J3022	4,087.90	0
J3034	8.6	74	1,000.00	70.3	23.7	J3022	4,140.20	0
J3035	8.6	80.4	1,000.00	76.7	25.6	J3022	4,189.10	0
J3036	8.6	83	1,000.00	79.3	22.7	J3022	4,261.80	0
J3037	8.6	82.1	1,000.00	78.4	25.4	J3022	4,338.60	0
J3038	8.6	84.1	1,000.00	80.4	33.1	J3022	4,400.00	0
J3039	8.6	81.5	1,000.00	77.9	36.8	J3022	4,475.30	0
J3040	8.6	75.3	1,000.00	71.7	36.4	J3022	4,556.70	0
J3041	8.6	74.2	3,000.00	33.7	36.6	J3027	3,095.20	0
J3042	8.6	79.9	3,000.00	36	38.9	J3027	3,105.50	0
J3043	8.6	79.3	3,000.00	36.3	39.4	J3027	3,095.20	0
J3044	8.6	73.9	3,000.00	26.1	26.5	J3027	3,334.00	0
J3045	8.6	73.3	3,000.00	25.4	24.8	J3027	3,346.10	0
J3046	8.6	74	3,000.00	25.8	21.9	J3046	3,377.30	0
J3047	8.6	78.5	3,000.00	28.8	23	J3046	3,460.00	0
J3048	8.6	93.3	1,000.00	80.4	30.8	J3027	3,620.80	0
J3049	8.6	57.3	3,000.00	41.5	20	J3022	3,996.30	0
J3050	8.6	75.9	3,000.00	29.7	32.1	J3027	3,277.70	0
J3052	8.6	79.3	1,000.00	72.7	30.6	J3052	3,947.80	0
J3053	8.6	80.8	1,000.00	74	30.2	J3053	3,925.30	0

ID	Static Demand (gpm)	Static Pressure (psi)	Fire-Flow Demand (gpm)	Residual Pressure (psi)	Minimum System Pressure (psi)	Critical Available Node ID	Design Flow (gpm)	Fire Flow Deficit (gpm)
J3056	9.3	164.3	1,000.00	150	77.8	J3022	4,543.90	0
J3057	8.6	153.6	1,000.00	140.2	77	J3022	4,543.20	0
J3058	8.6	134.1	1,000.00	122.7	71.7	J3022	4,543.20	0
J3059	8.6	129.5	2,750.00	82.6	71.3	J3022	4,543.20	0
J3060	8.6	106.2	1,000.00	99.4	72.4	J3022	4,552.40	0
J3061	8.6	70.9	1,000.00	65.1	31	J3061	4,059.30	0
J34	2.9	34.6	1,000.00	33.1	30.1	J34	3,934.40	0
J35	2.9	38.6	1,000.00	34.3	26.6	J35	2,539.60	0
J36	2.9	39.4	1,000.00	33.9	28.2	J37	2,122.00	0
J37	2.9	38.7	1,000.00	32.1	24.8	J37	1,866.10	0
J38	2.9	40.9	1,000.00	34	26.4	J38	1,939.60	0
J39	2.9	43.7	1,000.00	37.7	20	J44	2,230.50	0
J4	2.9	48.8	1,000.00	34	20	J4	1,455.60	0
J40	2.9	40.6	1,000.00	34.1	20	J44	2,007.10	0
J41	2.9	43	1,000.00	33.6	23.1	J41	1,705.00	0
J42	2.9	39.2	1,000.00	32.5	20	J44	1,910.40	0
J43	2.9	39	1,000.00	32.2	20	J44	1,889.60	0
J44	2.9	38.6	1,000.00	31	22.9	J44	1,727.90	0
J45	2.9	39.3	1,000.00	32.6	20	J44	1,904.30	0
J46	2.9	39.6	1,000.00	30.1	20	J46	1,541.10	0
J47	2.9	46.1	1,000.00	35	23.5	J47	1,665.20	0
J48	2.9	49.4	1,000.00	37	23.9	J52	1,631.50	0
J49	2.9	52.6	1,000.00	39.3	24.2	J52	1,631.50	0
J5	2.9	36.3	1,000.00	34.2	32.3	J5	3,835.80	0
J50	2.9	52.5	1,000.00	37.1	20.2	J52	1,428.00	0
J51	2.9	53.4	1,000.00	37.5	20	J52	1,428.00	0
J52	2.9	48.3	1,000.00	31.2	20	J52	1,341.70	0
J53	2.9	68.8	1,000.00	47.9	24.2	J2515	1,352.40	0
J54	2.9	73.3	1,000.00	49.4	21.9	J2515	1,251.80	0
J55	2.9	43.9	1,000.00	38.1	22.3	J63	2,406.20	0
J56	2.9	44.4	1,000.00	38.4	21.3	J63	2,348.70	0
J57	2.9	48.8	1,000.00	40.7	32.4	J63	1,911.80	0
J58	2.9	48.3	1,000.00	36.5	23.7	J63	1,501.20	0
J59	2.9	50	1,000.00	37	22.6	J63	1,413.00	0
J6	2.9	36.1	1,000.00	34.1	32.3	J6	3,951.90	0
J60	2.9	48.8	1,000.00	34.6	20	J63	1,346.60	0
J61	2.9	47.9	1,000.00	33.3	20	J63	1,375.70	0
J62	2.9	47.1	1,000.00	32.5	20	J63	1,371.80	0
J63	2.9	43.4	1,000.00	27.1	20	J63	1,237.30	0
J64	2.9	47.6	1,000.00	31.4	20	J64	1,364.90	0

ID	Static Demand (gpm)	Static Pressure (psi)	Fire-Flow Demand (gpm)	Residual Pressure (psi)	Minimum System Pressure (psi)	Critical Available Node ID	Design Flow (gpm)	Fire Flow Deficit (gpm)
J65	2.9	53	1,000.00	46.1	20	J111	2,225.00	0
J66	2.9	41	1,000.00	34.4	20	J66	2,091.80	0
J67	2.9	42.3	1,000.00	34.4	25.1	J67	1,916.80	0
J68	2.9	42.1	1,000.00	32	23.2	J68	1,609.50	0
J69	2.9	43.9	1,000.00	34	20	J69	1,711.60	0
J7	2.9	36.1	1,000.00	34.1	25.3	J7	4,137.00	0
J70	2.9	45.5	1,000.00	33.4	23.4	J70	1,560.80	0
J71	2.9	46.1	1,000.00	36.8	34.4	J71	1,875.80	0
J72	2.9	46.4	1,000.00	38	29.8	J72	2,016.80	0
J73	2.9	46.2	1,000.00	35.1	25	J73	1,673.40	0
J74	2.9	45.7	1,000.00	36.2	20	J74	1,839.40	0
J75	2.9	44.2	1,000.00	35.1	20	J75	1,825.50	0
J76	2.9	46.9	1,000.00	31.6	20	J77	1,373.70	0
J78	2.9	47.8	1,000.00	31.7	20	J78	1,382.10	0
J8	2.9	35.8	1,000.00	33.8	22.1	J8	4,150.20	0
J80	2.9	49.1	1,000.00	32.6	20	J81	1,380.40	0
J82	2.9	50.1	1,000.00	34.5	21.2	J82	1,475.80	0
J83	2.9	50.7	1,000.00	35.7	24.3	J83	1,524.20	0
J85	2.9	51.2	1,000.00	36.9	27.9	J86	1,557.40	0
J86	2.9	50.3	1,000.00	27.2	31.8	J86	1,171.40	0
J87	2.9	56.5	1,000.00	48.6	35.4	J86	2,460.60	0
J88	2.9	53.7	1,000.00	45.8	34.9	J219	2,466.30	0
J89	2.9	54.5	1,000.00	46.8	29.8	J219	2,424.10	0
J9	2.9	35.7	1,000.00	33.5	29.9	J9	3,776.20	0
J90	2.9	51.1	1,000.00	43.9	20	J219	2,436.70	0
J91	2.9	51.2	1,000.00	43.9	20	J219	2,428.00	0
J92	2.9	55.7	1,000.00	46.3	35.9	J93	2,197.80	0
J93	2.9	52.7	1,000.00	41.7	33.9	J93	1,926.60	0
J94	2.9	57.4	1,000.00	46.4	38.5	J94	2,081.20	0
J95	2.9	55.4	1,000.00	46.1	36.9	J95	2,263.20	0
J96	2.9	56.5	1,000.00	49.6	20	J219	2,303.10	0
J97	2.9	56.8	1,000.00	50	20	J219	2,283.80	0
J98	2.9	58.2	1,000.00	51.5	20	J219	2,231.10	0
J99	2.9	58.9	1,000.00	51.9	34.8	J219	2,221.80	0

2014 Peak Hour Demand Scenario
Existing System- No Improvments

ID	Demand (gpm)	Elevation (ft)	Head (ft)	Pressure (psi)
J1	0	372.8	509.1	59.1
J10	2.9	400.2	509	47.1
J100	2.9	332.2	508	76.1
J1000	0	381.2	394	5.5
J1001	0	360.4	393.9	14.5
J1002	0	277.6	393.7	50.3
J1003	2	267	393.7	54.9
J1004	2	262.4	393.7	56.9
J1005	2	263.5	393.7	56.4
J1006	2	265.1	393.7	55.7
J1007	2	272.7	393.7	52.4
J1008	2	272.3	393.7	52.6
J1009	2	271.7	393.7	52.9
J101	2.9	323.5	508	79.9
J1010	2	277.9	393.7	50.2
J1011	2	288.5	393.7	45.6
J1012	2	272.5	393.7	52.5
J1013	2	274.7	393.7	51.6
J1014	2	265.5	393.7	55.5
J1015	2	278.4	393.7	49.9
J1016	2	279.7	393.7	49.4
J1017	0	315.2	393.7	34
J1018	0	321.1	393.7	31.4
J1019	2	284.4	393.7	47.3
J102	2.9	335.1	508	74.9
J1020	2	286	393.7	46.7
J1021	2.2	298.3	393.7	41.3
J1022	2	300.5	393.8	40.4
J1023	2	305.8	393.8	38.1
J1024	2	309.3	393.8	36.6
J1025	2	311.4	393.8	35.7
J1026	2	301.8	393.8	39.9
J1027	2	302.7	393.8	39.5
J1028	0	371.3	393.9	9.8
J1029	0	380.9	394	5.7
J103	2.9	335.2	507.9	74.9
J1030	0	371.2	393.9	9.9
J1031	0	373.3	393.9	9
J1032	2	304.3	393.7	38.7
J1033	2	301	393.8	40.2
J1034	2	292.7	393.8	43.8
J1035	2	294.4	393.8	43.1
J1036	2	296.8	393.8	42
J1037	2	296.8	393.8	42

J1038	2	295.5	393.8	42.6
J1039	2	295.7	393.8	42.5
J104	2.9	332.5	507.9	76
J1040	2	297.2	393.8	41.9
J1041	2	302.8	393.8	39.4
J1042	2	301.6	393.8	39.9
J1043	2	303.2	393.8	39.2
J1044	2	303.5	393.8	39.1
J1045	2	307.6	393.8	37.3
J1046	2	305.1	393.8	38.4
J1047	2	313.5	393.8	34.8
J1048	2	309.9	393.8	36.3
J1049	2	311.3	393.8	35.7
J105	2.9	317.7	508	82.4
J1050	2	308.1	393.8	37.1
J1051	2	293	393.8	43.7
J1052	2	298.1	393.8	41.5
J1053	2	302.1	393.7	39.7
J1054	2	297.4	393.7	41.7
J1055	2	297.7	393.7	41.6
J1056	2	277.5	393.7	50.4
J1057	2	291.3	393.7	44.4
J1058	2	278.1	393.7	50.1
J1059	2.2	226.7	393.7	72.4
J106	2.9	399.8	508.9	47.3
J1060	2	140.1	393.7	109.9
J1061	2	269.4	393.7	53.9
J1062	2	267.7	393.7	54.6
J1063	2	282.9	393.7	48
J1064	2	265.9	393.7	55.4
J1065	2	263.4	393.7	56.5
J1066	2	264.8	393.7	55.8
J1067	2	262.3	393.7	56.9
J1068	2	272.6	393.7	52.5
J1069	2	260.8	393.7	57.6
J107	2.9	365.6	508.1	61.7
J1070	2	261.1	393.7	57.5
J1071	2	285.2	393.7	47
J1072	2	266	393.7	55.3
J1073	2	235.4	393.5	68.5
J1074	2	232.5	393.5	69.8
J1075	2	264.4	393.6	56
J1076	2	254.8	393.5	60.1
J1077	2	264.5	393.5	55.9
J1078	2	266.5	393.5	55

J1079	2	259.4	393.5	58.1
J108	2.9	382.9	508	54.2
J1080	2	239.6	393.5	66.7
J1081	2	248.9	393.5	62.7
J1082	2	251.1	393.5	61.7
J1083	2	251.5	393.5	61.6
J1084	2	273.9	393.5	51.8
J1085	2	275.4	393.5	51.2
J1086	2	305	393.5	38.4
J1087	2	259.8	393.5	58
J1088	2	270.9	393.6	53.1
J1089	0	297	393.6	41.8
J109	2.9	373.5	508	58.3
J1090	2	195.6	393.5	85.8
J1091	2	196.3	393.5	85.5
J1092	2	193.1	393.5	86.8
J1093	2	183.9	393.5	90.8
J1094	2	182.3	393.5	91.5
J1095	2	224.9	393.5	73.1
J1096	2	224.9	393.5	73.1
J1097	2	220	393.5	75.2
J1098	2	190.2	393.5	88.1
J1099	2	206.1	393.5	81.2
J11	2.9	403.1	509.6	46.1
J110	2.9	336.6	508.3	74.4
J1100	2	208.5	393.5	80.2
J1101	2	165	393.5	99
J1102	2	171.3	393.5	96.3
J1103	2	174.8	393.5	94.8
J1104	2	181	393.5	92.1
J1105	2	180.9	393.5	92.1
J1106	2	161.8	393.5	100.4
J1107	2	164.3	393.5	99.3
J1108	2	152.5	393.5	104.4
J1109	2	161.6	393.5	100.5
J111	2.9	379.7	508.1	55.6
J1110	2	160.7	393.5	100.9
J1111	2	170	393.5	96.9
J1112	2	159.1	393.5	101.6
J1113	2	161.9	393.5	100.4
J1114	2.7	159.8	393.5	101.3
J1116	2	188	393.5	89
J1117	2	187.1	393.5	89.4
J1118	2	186.5	393.4	89.7
J1119	2	184.4	393.4	90.6

J112	2.9	364.3	508.1	62.3
J1120	2	187.1	393.4	89.4
J1121	2	260	393.4	57.8
J1122	2	195.6	393.4	85.7
J1123	2	121.3	393.4	117.9
J1124	2	120.4	393.4	118.3
J1125	2	93	393.4	130.2
J1126	2	106.7	393.4	124.2
J1127	2	118.3	393.4	119.2
J1128	2	101.3	393.4	126.6
J1129	2	139.7	393.4	109.9
J113	2.9	355.7	508.1	66
J1130	2	89.4	393.4	131.7
J1131	2	140.4	393.4	109.6
J1132	2	140	393.4	109.8
J1133	2	142.9	393.4	108.6
J1134	2	162.2	393.4	100.2
J1135	2	160.7	393.4	100.9
J1136	2	170.7	393.5	96.5
J1137	2	161.4	393.4	100.5
J1138	2	156.9	393.4	102.5
J1139	2	134.4	393.4	112.2
J114	2.9	354.8	508	66.4
J1140	2	132.2	393.4	113.2
J1141	2	127.4	393.4	115.3
J1142	2	153.7	393.4	103.9
J1143	2	155.7	393.4	103
J1144	2	185.5	393.5	90.1
J1145	2	192.8	393.5	86.9
J1146	2	207.7	393.5	80.5
J1147	2	237.8	393.5	67.5
J1148	2	238.2	393.5	67.3
J1149	2	231.8	393.5	70.1
J115	2.9	350.4	508	68.3
J1150	2	239.1	393.5	66.9
J1151	2	257.4	393.5	59
J1152	2	279.1	393.5	49.5
J1153	2	273.7	393.5	51.9
J1154	2	223.1	393.5	73.8
J1155	2	211.8	393.5	78.7
J1156	2	206.5	393.5	81
J1157	2	200	393.5	83.8
J1158	2	198.9	393.4	84.3
J1159	2	192.1	393.4	87.3
J116	2.9	348.7	508	69

J1160	2	195.8	393.4	85.6
J1161	2	188.2	393.4	88.9
J1162	2	190.9	393.4	87.8
J1163	2	168.7	393.4	97.4
J1164	2	166.2	393.4	98.5
J1165	2	168.5	393.4	97.5
J1166	2	169.9	393.4	96.8
J1167	2	164.3	393.4	99.3
J1168	2	150.3	393.4	105.4
J1169	2	151.7	393.4	104.7
J117	2.9	348.7	508	69
J1170	2	143.8	393.4	108.2
J1171	2.7	104.4	393.4	125.2
J1172	0	375.1	393.7	8.1
J1173	2	195.2	393.5	85.9
J1174	2	242.5	393.5	65.4
J1175	2	247.8	393.5	63.1
J1176	2	242.7	393.5	65.3
J1177	2	245.8	393.5	64
J1178	2	246.2	393.5	63.8
J1179	2	226.8	393.5	72.2
J118	2.9	346.2	508	70.1
J1180	2	234.8	393.5	68.7
J1181	2	271.7	393.7	52.9
J1182	2	271	393.7	53.2
J119	2.9	351.2	508	67.9
J1191	0	80.9	236.8	67.5
J1192	0	170	237.8	29.4
J1193	0	170	237.8	29.4
J1194	0	170	355.9	80.6
J1195	0	170	356	80.6
J12	2.9	403.7	509.6	45.9
J120	2.9	349.9	508	68.5
J121	2.9	346.4	508	70
J122	2.9	338.7	507.9	73.3
J123	2.9	342.5	507.8	71.6
J124	2.9	341.6	507.8	72
J125	2.9	343.3	507.8	71.3
J126	2.9	331.4	507.8	76.5
J127	3	328.5	507.8	77.7
J128	2.9	326.8	507.8	78.4
J129	2.9	330.2	507.8	77
J13	2.9	401.4	509.6	46.9
J130	2.9	287.7	507.8	95.4
J131	2.9	352.9	508	67.2

J132	2.9	353.7	508	66.9
J133	2.9	347	508	69.7
J134	2.9	372.2	508	58.8
J135	2.9	356.6	508	65.6
J136	2.9	375.7	508	57.3
J137	2.9	349.9	508	68.5
J138	2.9	351.2	508	67.9
J139	2.9	368	508	60.7
J14	2.9	399.5	509.6	47.7
J140	2.9	366.6	508	61.2
J141	2.9	345.7	508	70.3
J142	2.9	355.8	508	65.9
J143	2.9	345.7	508	70.3
J144	2.9	339.4	508	73
J145	2.9	338.2	508	73.6
J146	2.9	337.3	508.3	74.1
J147	2.9	337.9	508	73.7
J148	2.9	345.8	508	70.3
J149	2.9	348.7	508	69
J15	2.9	384.7	509.6	54.1
J150	2.9	352	508	67.6
J151	2.9	329.3	508	77.4
J152	2.9	329.7	508	77.2
J153	2.9	321.7	508	80.7
J154	2.9	314.3	508	83.9
J155	2.9	311.5	508	85.1
J156	2.9	319.6	508	81.6
J157	2.9	302.3	508	89.1
J158	2.9	296.9	508	91.5
J159	2.9	302.9	508	88.9
J16	2.9	379.6	509.6	56.3
J160	2.9	301	508	89.7
J161	2.9	303.4	508	88.7
J162	2.9	311.7	508.1	85.1
J163	2.9	323.6	508.1	79.9
J164	2.9	306.2	508.1	87.5
J165	2.9	303.4	508.1	88.7
J166	2.9	300.2	508.1	90.1
J167	2.9	295.2	508	92.2
J168	2.9	296.5	508	91.6
J169	2.9	292.3	508	93.4
J17	2.9	375.3	509.6	58.2
J170	2.9	294.4	507.9	92.5
J171	2.9	289.3	507.9	94.7
J172	2.9	306.8	507.9	87.1

J173	2.9	308.6	507.9	86.4
J174	2.9	303.3	507.9	88.7
J175	2.9	295.6	507.8	92
J176	2.9	287	507.8	95.7
J177	2.9	276.8	507.7	100.1
J178	2.9	276.7	507.7	100.1
J179	2.9	262	507.7	106.5
J18	2.9	387	509.6	53.1
J180	2.9	259.4	507.7	107.6
J181	2.9	241.6	507.7	115.3
J182	2.9	239.7	507.7	116.1
J183	2.9	234	507.7	118.6
J184	2.9	242.7	507.7	114.8
J185	2.9	218.6	507.7	125.2
J186	2.9	220.5	507.7	124.4
J187	2.9	194.1	507.7	135.9
J188	2.9	228.6	507.7	120.9
J189	2.9	222.1	507.7	123.7
J19	2.9	391.9	509.6	51
J190	2.9	226	507.7	122
J191	2.9	253.9	507.7	110
J192	2.9	257.8	507.7	108.3
J193	2.9	326.3	508	78.7
J194	2.9	335	508	74.9
J195	2.9	333	507.9	75.8
J196	2.9	237.3	507.7	117.1
J197	2.9	242	507.7	115.1
J198	2.9	260.7	507.7	107
J199	2.9	270.5	507.7	102.7
J2	2.9	365.1	509.1	62.4
J20	2.9	391.4	509.6	51.2
J200	2.9	274.2	507.7	101.1
J2000	0	220.7	238	7.5
J2001	0	208.7	238.9	13.1
J2002	0	205.1	240.4	15.3
J2004	5.3	175.7	337.4	70.1
J2005	5.3	171.7	337.4	71.8
J2006	5.3	176.5	337.4	69.7
J2007	5.3	178.5	337.4	68.8
J2008	5.3	193.1	337.4	62.5
J2009	5.3	189.4	337.4	64.1
J201	2.9	273.1	507.7	101.6
J2010	2.9	145.8	238.9	40.3
J2011	2.9	143.4	238.8	41.3
J2012	2.9	142.5	238.8	41.7

J2013	2.9	145.8	238.8	40.3
J2014	2.9	150.9	238.8	38.1
J2015	2.9	152.5	238.8	37.4
J2016	2.9	165.9	238.8	31.6
J2017	2.9	169.5	238.8	30
J2018	2.9	130.3	238.3	46.8
J2019	2.9	95.8	237.2	61.3
J202	2.9	221.3	507.7	124.1
J2020	2.9	93.2	237.1	62.4
J2021	2.9	99.1	237	59.8
J2022	2.9	117.3	236.8	51.8
J2023	2.9	134.7	236.8	44.2
J2024	2.9	122.3	236.7	49.6
J2025	2.9	106.2	236.7	56.6
J2026	2.9	96.2	236.7	60.9
J2027	2.9	84.9	236.7	65.8
J2028	2.9	87.2	236.7	64.8
J2029	2.9	77.3	236.7	69.1
J203	2.9	292	507.7	93.4
J2030	2.9	87.2	236.7	64.8
J2031	2.9	68.4	236.7	72.9
J2032	2.9	69.5	236.7	72.5
J2033	2.9	80.3	236.7	67.8
J2034	2.9	81.7	236.7	67.2
J2035	2.9	87.1	236.7	64.8
J2036	2.9	75.9	236.7	69.7
J2037	2.9	65.3	236.7	74.3
J2038	2.9	58.3	236.7	77.3
J2039	2.9	58	236.7	77.4
J204	2.9	291.9	507.7	93.5
J2040	2.9	58.1	236.7	77.4
J2041	2.9	58.2	236.7	77.3
J2042	2.9	58.6	236.7	77.2
J2043	2.9	58.1	236.7	77.4
J2044	2.9	75	236.7	70.1
J2045	2.9	75.1	236.7	70
J2046	2.9	58.1	236.7	77.4
J2047	2.9	44.2	236.7	83.4
J2048	2.9	20.1	236.7	93.9
J2049	2.9	16.1	236.7	95.6
J205	2.9	285.9	507.7	96.1
J2050	2.9	28.5	236.7	90.2
J2051	3.1	42.2	236.7	84.3
J2052	2.9	41.2	236.7	84.7
J2053	2.9	19.6	236.7	94.1

J2054	2.9	18.7	236.7	94.4
J2055	2.9	43.5	236.7	83.7
J2056	2.9	42.7	236.7	84.1
J2057	2.9	42.2	236.7	84.3
J2058	2.9	44	236.7	83.5
J2059	2.9	43.9	236.7	83.5
J206	2.9	293.7	507.7	92.7
J2060	2.9	48	236.7	81.8
J2061	2.9	52.1	236.7	80
J2062	2.9	53	236.7	79.6
J2063	2.9	54.3	236.7	79
J2064	2.9	55.7	236.7	78.4
J2065	2.9	55.2	236.7	78.6
J2066	2.9	56.4	236.7	78.1
J2067	2.9	82.4	236.7	66.8
J2068	2.9	93.6	236.7	62
J2069	2.9	41.6	236.7	84.5
J207	2.9	331.9	507.7	76.2
J2070	2.9	38.5	236.7	85.9
J2071	2.9	28.9	236.7	90
J2072	2.9	44.8	236.7	83.2
J2073	2.9	44.7	236.7	83.2
J2074	2.9	45.8	236.7	82.7
J2075	2.9	66	236.7	74
J2076	2.9	32.8	236.7	88.3
J2077	2.9	24.1	236.7	92.1
J2078	2.9	61.7	236.8	75.9
J2079	2.9	62.4	236.8	75.5
J208	2.9	321.7	507.7	80.6
J2080	2.9	67	236.8	73.6
J2081	2.9	68.9	236.8	72.7
J2082	2.9	69	236.8	72.7
J2083	2.9	68.2	236.8	73
J2084	2.9	69.2	236.8	72.6
J2085	2.9	77.4	236.8	69.1
J2086	2.9	79.6	236.8	68.1
J2087	2.9	86.2	236.8	65.2
J2088	2.9	87.9	236.8	64.5
J2089	2.9	84.1	236.8	66.1
J209	2.9	324.1	507.7	79.5
J2090	2.9	81.7	236.8	67.2
J2091	2.9	128.9	236.8	46.7
J2092	2.9	59	236.7	77
J2093	2.9	59.4	236.7	76.8
J2094	2.9	57.9	236.7	77.5

J2095	2.9	58.7	236.7	77.1
J2096	2.9	43.1	236.8	83.9
J2097	2.9	41.6	236.8	84.5
J2098	2.9	33.6	236.8	88
J2099	2.9	43.2	236.8	83.9
J21	2.9	380.9	509.6	55.8
J210	2.9	323.8	507.7	79.7
J2100	2.9	24.9	236.7	91.8
J2101	2.9	24.1	236.7	92.1
J2102	2.9	29.3	236.7	89.9
J2103	2.9	26.8	236.7	90.9
J2104	2.9	27.9	236.7	90.5
J2105	2.9	34.8	236.7	87.5
J2106	2.9	41.7	236.7	84.5
J2107	2.9	45.8	236.7	82.7
J2108	2.9	72.3	236.8	71.2
J2109	2.9	93.4	236.8	62.1
J211	2.9	318.7	507.7	81.9
J2110	2.9	90.3	236.8	63.5
J2111	2.9	98.8	236.8	59.8
J2112	2.9	98.4	236.8	60
J2113	2.9	114	236.8	53.2
J2114	2.9	120	236.7	50.6
J2115	2.9	130	236.7	46.2
J2116	2.9	132	236.7	45.4
J2117	2.9	135	236.7	44.1
J2118	2.9	133	236.7	44.9
J2119	2.9	135	236.7	44.1
J212	2.9	310.4	507.7	85.5
J2120	2.9	122	236.7	49.7
J2121	2.9	128	236.7	47.1
J2122	2.9	120	236.7	50.6
J2123	2.9	108.6	236.7	55.5
J2124	2.9	123.2	236.7	49.2
J2125	2.9	110.5	236.7	54.7
J2126	2.9	109.2	236.7	55.3
J2127	2.9	67.4	236.7	73.4
J2128	2.9	62.8	236.7	75.4
J2129	2.9	26.5	236.7	91.1
J213	2.9	293.2	507.8	93
J2130	2.9	27.6	236.7	90.6
J2131	2.9	30.7	236.7	89.3
J2132	2.9	30.2	236.7	89.5
J2133	2.9	41.6	236.7	84.5
J2134	3.1	34.7	236.7	87.5

J2135	2.9	34	236.7	87.8
J2137	2.9	34.2	236.7	87.8
J2138	2.9	38.4	236.7	85.9
J2139	2.9	38.2	236.7	86
J214	2.9	375.9	507.6	57.1
J2140	2.9	41.8	236.8	84.5
J2141	2.9	98.9	236.8	59.8
J2142	2.9	98.9	237	59.8
J2143	2.9	112.9	237	53.7
J2144	2.9	97.9	237	60.3
J2145	2.9	97.5	237	60.5
J2146	2.9	95.9	237.2	61.2
J2147	2.9	104.9	237.2	57.3
J2148	2.9	100.2	237.4	59.5
J2149	2.9	124.6	237.6	49
J215	2.9	379.6	507.6	55.5
J2150	2.9	130.2	237.6	46.5
J2151	2.9	136.5	237.6	43.8
J2152	2.9	113.9	237.6	53.6
J2153	2.9	47.5	236.8	82
J2154	2.9	46.9	236.8	82.3
J2155	2.9	47.6	236.8	82
J2156	2.9	52.5	236.8	79.8
J2157	2.9	49.8	236.8	81
J2158	2.9	65.1	236.8	74.4
J2159	2.9	66.2	236.8	73.9
J216	2.9	392.6	507.6	49.8
J2160	2.9	96.5	236.8	60.8
J2161	2.9	93.6	236.8	62
J2162	2.9	95.6	236.8	61.2
J2163	2.9	53.1	236.8	79.6
J2164	2.9	32.7	236.8	88.4
J2165	2.9	46.7	236.8	82.3
J2166	2.9	84.7	236.8	65.9
J2167	0	194	237.7	19
J2168	2.9	178	237.7	25.9
J2169	2.9	183.4	237.7	23.5
J217	2.9	392.5	507.6	49.9
J2170	0	203	237.9	15.1
J2171	0	209.2	239.4	13.1
J2172	0	209.1	239.3	13.1
J2173	0	159.4	238.3	34.2
J2174	2.9	138.7	237.7	42.9
J2175	2.9	135.6	237.7	44.2
J2176	2.9	139.9	237.3	42.2

J2177	2.9	143.8	237.2	40.5
J2178	2.9	142.6	237	40.9
J2179	2.9	146.1	237	39.4
J218	2.9	392.3	507.6	50
J2180	2.9	156.3	236.8	34.9
J2181	2.9	108.8	236.7	55.4
J2182	2.9	107.8	236.7	55.9
J2183	2.9	92.1	236.7	62.6
J2184	2.9	90.2	236.7	63.5
J2185	2.9	86.5	236.7	65.1
J2186	2.9	104.1	236.7	57.4
J2187	2.9	94.8	236.6	61.4
J2188	2.9	90.3	236.6	63.4
J2189	2.9	79.1	236.6	68.2
J219	2.9	394.7	507.6	48.9
J2190	2.9	37.2	236.5	86.4
J2191	2.9	26.7	236.5	90.9
J2192	2.9	39.1	236.5	85.5
J2193	2.9	30.4	236.5	89.3
J2194	2.9	23.7	236.5	92.2
J2195	2.9	17.8	236.5	94.8
J2196	2.9	17.2	236.5	95
J2197	2.9	21.9	236.5	93
J2198	2.9	19.8	236.5	93.9
J2199	2.9	34.1	236.5	87.7
J22	2.9	374.3	509.6	58.6
J220	2.9	383.7	507.6	53.7
J2200	2.9	70.9	236.5	71.8
J2201	2.9	73.7	236.5	70.5
J2202	2.9	17.8	236.5	94.8
J2203	2.9	20.1	236.5	93.8
J2204	2.9	19.6	236.5	94
J2205	2.9	20.1	236.5	93.8
J2206	2.9	15.3	236.5	95.9
J2207	2.9	18.8	236.6	94.3
J2208	2.9	35.2	236.6	87.2
J2209	2.9	39.1	236.6	85.6
J221	2.9	383.6	507.6	53.7
J2210	2.9	13.1	236.6	96.8
J2211	2.9	12.7	236.6	97
J2212	2.9	15.4	236.6	95.9
J2213	2.9	17.9	236.6	94.8
J2214	2.9	18.9	236.6	94.3
J2215	2.9	23.4	236.6	92.4
J2216	2.9	45.2	236.6	82.9

J2217	2.9	35.4	236.6	87.2
J2218	2.9	36.3	236.6	86.8
J2219	2.9	61.5	236.6	75.9
J222	2.9	372.3	507.6	58.6
J2220	2.9	80.2	236.6	67.8
J2221	2.9	58.9	236.6	77
J2222	2.9	60.2	236.6	76.4
J2223	2.9	71.6	236.6	71.5
J2224	2.9	75	236.6	70
J2225	2.9	67.9	236.6	73.1
J2226	2.9	67.2	236.6	73.4
J2228	2.9	32.7	236.6	88.4
J2229	2.9	41.9	236.6	84.4
J223	2.9	380.4	507.6	55.1
J2230	2.9	55.6	236.6	78.4
J2231	2.9	55.9	236.6	78.3
J2232	2.9	68.5	236.6	72.9
J2233	2.9	68.1	236.6	73
J2234	2.9	48	236.6	81.7
J2235	2.9	47.1	236.7	82.1
J2236	2.9	46.8	236.7	82.3
J2237	2.9	72.5	236.7	71.1
J2238	2.9	74	236.7	70.5
J2239	2.9	86.4	236.7	65.1
J224	2.9	374.3	507.6	57.8
J2240	2.9	91.1	236.7	63.1
J2241	2.9	114.7	236.7	52.9
J2242	2.9	118.6	236.7	51.2
J2243	2.9	120.9	236.7	50.2
J2244	2.9	126.5	236.8	47.8
J2245	2.9	54.3	236.7	79
J2246	2.9	89.4	236.7	63.8
J2247	2.9	92.5	236.7	62.5
J2248	2.9	55.2	236.7	78.6
J2249	2.9	56	236.7	78.3
J225	2.9	379.7	507.6	55.4
J2250	2.9	65.5	236.7	74.2
J2251	2.9	103.2	236.7	57.8
J2252	2.9	105.2	236.8	57
J2253	2.9	108	236.8	55.8
J2254	2.9	108.5	236.8	55.6
J2255	2.9	115.4	236.8	52.6
J2256	2.9	128.4	236.8	47
J2257	2.9	117.7	236.8	51.6
J2258	2.9	118.4	236.9	51.3

J2259	2.9	124.8	237	48.6
J226	2.9	376.1	507.6	57
J2260	2.9	112.9	236.8	53.7
J2261	2.9	108.7	236.8	55.5
J2262	2.9	108.9	236.8	55.4
J2263	2.9	100.5	236.7	59
J2264	2.9	110	236.8	54.9
J2265	2.9	137.1	237.6	43.6
J2266	2.9	131.8	237.1	45.7
J2267	2.9	41.2	236.7	84.7
J2268	2.9	43.5	236.7	83.7
J2269	2.9	19.7	236.7	94
J227	2.9	373.2	507.6	58.3
J2270	2.9	19.5	236.7	94.1
J2271	2.9	13.7	236.7	96.6
J2272	2.9	19	236.7	94.3
J2273	2.9	14.3	236.7	96.4
J2274	2.9	12.8	236.7	97
J2275	2.9	18.9	236.7	94.4
J2276	2.9	19.7	236.7	94
J2277	2.9	20.1	236.7	93.9
J2278	2.9	19.8	236.7	94
J2279	2.9	33.5	236.7	88
J228	2.9	360.1	507.6	63.9
J2280	2.9	41.6	236.7	84.5
J2281	2.9	59.8	236.7	76.7
J2282	2.9	70.5	236.7	72
J2285	2.9	81.4	236.7	67.3
J2286	2.9	22.1	236.7	93
J2287	2.9	48.3	236.7	81.6
J2288	2.9	55.5	236.7	78.5
J2289	2.9	93.9	236.7	61.9
J229	2.9	342.3	507.7	71.6
J2290	2.9	93.7	236.7	62
J2291	2.9	94	236.7	61.8
J2292	2.9	111.4	236.7	54.3
J2293	2.9	114.2	236.7	53.1
J2294	2.9	120	236.7	50.6
J2295	2.9	113.5	236.7	53.4
J2296	2.9	100.5	236.8	59.1
J2297	2.9	107.9	236.8	55.8
J2298	2.9	104.5	236.8	57.3
J2299	2.9	99.5	236.8	59.5
J23	2.9	404.2	509.7	45.7
J230	2.9	359	507.6	64.4

J2300	2.9	99.4	236.8	59.6
J2301	2.9	102.9	236.8	58
J2302	2.9	122.7	236.8	49.4
J2303	2.9	129.5	236.8	46.5
J2304	2.9	99.7	236.8	59.4
J2305	2.9	49.7	236.8	81.1
J2306	2.9	50.9	236.8	80.5
J2307	2.9	53.9	236.8	79.3
J2308	2.9	53	236.8	79.6
J2309	3.1	61.9	236.8	75.8
J231	2.9	360.5	507.6	63.7
J2310	2.9	56.6	236.8	78.1
J2311	2.9	55	236.8	78.8
J2312	2.9	56.1	236.8	78.3
J2313	2.9	51.5	236.8	80.3
J2314	2.9	55.4	236.8	78.6
J2315	2.9	63.7	236.8	75
J2316	2.9	68.9	236.8	72.7
J2317	3.1	55.6	236.8	78.5
J2318	2.9	68.8	236.8	72.8
J2319	2.9	65.7	236.8	74.2
J232	2.9	355.9	507.6	65.8
J2320	2.9	64.3	236.8	74.7
J2321	2.9	66.9	236.8	73.6
J2322	2.9	68	236.8	73.2
J2323	2.9	72.7	236.8	71.1
J2324	2.9	75.4	236.8	69.9
J2325	2.9	61	236.8	76.2
J2326	2.9	55.5	236.8	78.5
J2327	2.9	55.5	236.8	78.6
J2328	2.9	54.8	236.8	78.9
J2329	2.9	53.3	236.8	79.5
J233	2.9	354.1	507.7	66.5
J2330	2.9	84.1	236.8	66.2
J2331	2.9	67.1	236.8	73.5
J2332	2.9	64.2	236.8	74.8
J2333	2.9	93.2	236.8	62.2
J2334	2.9	88.3	236.8	64.4
J2335	2.9	78.7	236.8	68.5
J2336	2.9	75.8	236.8	69.8
J2337	2.9	64.2	236.8	74.8
J2338	2.9	61.2	236.8	76.1
J2339	2.9	59.5	236.8	76.8
J234	2.9	304	507.7	88.2
J2340	2.9	61	236.8	76.2

J2341	2.9	60.7	236.8	76.3
J2342	2.9	58.3	236.8	77.3
J2343	2.9	57	236.8	77.9
J2344	2.9	57.7	236.8	77.6
J2345	2.9	59.6	236.8	76.8
J2346	2.9	63.4	236.8	75.2
J2347	2.9	133.9	236.8	44.6
J2348	2.9	108.6	236.8	55.6
J2349	2.9	58.7	236.8	77.2
J235	2.9	290.7	508	94.1
J2350	2.9	57.3	236.8	77.8
J2351	2.9	57.7	236.8	77.6
J2352	2.9	64.8	236.8	74.5
J2353	2.9	63.2	236.8	75.2
J2354	2.9	63.6	236.8	75
J2355	2.9	65.2	236.8	74.4
J2356	2.9	59.4	236.8	76.9
J2357	2.9	60	236.8	76.6
J2358	2.9	66.7	236.8	73.7
J2359	2.9	69	236.8	72.7
J236	2.9	313.2	507.7	84.3
J2360	2.9	83.5	236.8	66.4
J2361	2.9	70	236.8	72.3
J2362	2.9	62.5	237	75.6
J2363	2.9	61.6	237	76
J2364	2.9	66.5	237	73.9
J2365	2.9	58.4	236.9	77.4
J2366	2.9	62	237	75.8
J2367	2.9	61.6	237	76
J2368	2.9	60.8	237	76.4
J2369	2.9	61.3	237	76.1
J237	2.9	307.4	507.7	86.8
J2370	2.9	58.8	237	77.2
J2371	2.9	58.1	237	77.5
J2372	2.9	57.4	236.9	77.8
J2373	2.9	56.4	236.9	78.2
J2374	2.9	100.7	236.8	59
J2375	2.9	93.1	236.8	62.2
J2376	2.9	77.2	236.8	69.1
J2377	2.9	58.5	236.7	77.2
J2378	2.9	48.3	236.7	81.6
J2379	2.9	72.7	236.7	71.1
J238	2.9	294.3	507.8	92.5
J2380	2.9	58.1	236.7	77.4
J2381	2.9	47.6	236.7	82

J2382	2.9	49.1	236.7	81.3
J2383	2.9	63.6	236.7	75
J2384	2.9	72.5	236.7	71.1
J2385	2.9	93.7	236.7	62
J2386	2.9	98.3	236.7	60
J2387	2.9	116.5	236.7	52.1
J2388	2.9	106.2	236.7	56.6
J2389	2.9	90.6	236.8	63.3
J2390	2.9	79.9	236.7	68
J2391	2.9	92.6	236.8	62.5
J2392	2.9	90.5	236.9	63.4
J2393	2.9	161.6	237.1	32.7
J2394	2.9	152.5	237	36.6
J2395	0	188.8	237.5	21.1
J2396	2.9	187.3	355.9	73.1
J2397	3.1	184.6	355.9	74.2
J2398	0	197.1	237.8	17.7
J2399	0	189.2	237.8	21.1
J24	2.9	402.2	509.7	46.6
J2400	0	170.9	237.8	29
J2401	0	171.6	355.9	79.9
J2402	2.9	164.9	355.9	82.8
J2403	2.9	156.8	355.9	86.3
J2404	2.9	140.2	355.9	93.5
J2405	2.9	194.9	355.9	69.8
J2406	2.9	76	236.7	69.6
J2407	2.9	70.3	236.7	72.1
J2408	2.9	66.6	236.7	73.7
J2409	2.9	75.7	236.7	69.8
J2410	2.9	99.9	236.7	59.3
J2411	2.9	101.9	236.7	58.4
J2412	2.9	117.3	236.7	51.7
J2413	2.9	133.1	236.7	44.9
J2414	2.9	101.6	236.7	58.5
J2415	2.9	100.6	236.7	59
J2416	2.9	100.9	236.7	58.9
J2417	2.9	100.8	236.7	58.9
J2418	2.9	100.7	236.7	58.9
J2419	2.9	97.6	236.7	60.3
J2420	2.9	100.2	236.7	59.2
J2421	2.9	100.1	236.7	59.2
J2422	2.9	104	236.7	57.5
J2423	2.9	110.1	236.7	54.9
J2424	2.9	89.7	236.7	63.7
J2425	2.9	84.6	236.7	65.9

J2426	2.9	110.6	236.7	54.6
J2427	2.9	92.2	236.7	62.6
J2428	2.9	88.9	236.7	64.1
J2429	2.9	43.2	236.7	83.8
J2430	2.9	96.6	236.7	60.7
J2431	2.9	106.2	236.7	56.6
J2432	2.9	105.7	236.7	56.8
J2433	2.9	104.7	236.7	57.2
J2434	2.9	73.2	236.7	70.9
J2435	2.9	78	236.7	68.8
J25	2.9	405.9	509.7	44.9
J2500	0	140	236.8	41.9
J2502	0	225	343.6	51.4
J2503	0	208	344.8	59.3
J2504	0	39	236.6	85.6
J2505	0	36	236.6	86.9
J2506	0	89.7	236.7	63.7
J2507	2.9	45.7	236.6	82.7
J2508	2.9	34	236.6	87.8
J2509	0	360	509.1	64.6
J2510	0	370.8	509.1	59.9
J2511	0	325.9	509.1	79.4
J2512	0	365	509.1	62.4
J2513	2.7	320	508.2	81.5
J2514	2.7	355	508.2	66.4
J2515	2.7	355	508.2	66.4
J2516	2.7	330	508.2	77.2
J2517	2.7	335	508.2	75
J2518	0	148	393.4	106.3
J2520	0	100	236.8	59.3
J2521	0	90	236.7	63.6
J2522	0	150	236.7	37.6
J2523	0	175	236.7	26.7
J2524	0	70	236.7	72.2
J2525	0	208	239.4	13.6
J2526	6.4	210	345.5	58.7
J2527	6.4	175	347.1	74.6
J2528	6.4	200	346.4	63.4
J2529	6.4	225	346.7	52.8
J2530	0	110	349.5	103.8
J2531	6.4	160	347.6	81.3
J2532	0	110	475.1	158.2
J2533	0	230	476.8	107
J2534	6.4	210	476.8	115.6
J2535	6.4	198	476.8	120.8

J2536	6.4	230	476.8	107
J2537	6.4	250	476.8	98.3
J2538	6.4	260	476.8	94
J2539	6.4	240	476.8	102.6
J2540	0	328	509.1	78.5
J2541	0	210	337.4	55.2
J2542	0	322	393.8	31.1
J2543	0	252	540	124.8
J2544	0	256	540	123.1
J2545	0	120	393.4	118.5
J2546	0	120	393.4	118.5
J2547	0	103	236.8	58
J26	0	404.7	509.7	45.5
J27	0	407.5	509.8	44.3
J28	0	406.8	509.8	44.6
J29	0	407.3	509.8	44.4
J3	2.9	325.9	509.1	79.4
J30	0	404.1	509.8	45.8
J3000	0	376	481.8	45.8
J3001	5.3	372	479.9	46.8
J3002	5.3	371	479.7	47.1
J3003	5.3	347.1	478.9	57.1
J3004	5.3	321.8	478.6	67.9
J3005	5.3	316.9	478.4	70
J3006	5.3	300.7	478.3	77
J3007	5.3	297.1	478.3	78.5
J3008	5.3	300.4	478	76.9
J3009	5.3	285.6	477.8	83.3
J3010	5.3	279.6	477.4	85.7
J3011	5.3	335.9	478.9	61.9
J3012	5.3	325.7	478.5	66.2
J3013	5.3	332.7	478.2	63
J3014	5.3	333.1	477.9	62.8
J3015	5.3	339.2	477.8	60.1
J3016	5.3	352.2	477.6	54.3
J3017	5.3	357.2	477.5	52.1
J3018	5.3	364.2	477.6	49.1
J3019	5.3	361	477.6	50.5
J3020	5.3	364	477.6	49.2
J3021	5.3	366	477.6	48.3
J3022	5.3	368	477.6	47.5
J3023	5.3	362	477.6	50.1
J3024	5.3	345.9	477.6	57.1
J3025	5.3	352.5	477.6	54.2
J3026	5.3	362.1	477	49.8

J3027	5.3	348.3	476.4	55.5
J3028	5.3	316	475.9	69.3
J3029	5.3	312	475.7	70.9
J3030	5.3	304.9	475.6	74
J3031	5.3	307	475.6	73.1
J3032	5.3	318.3	477.9	69.2
J3033	5.3	320	477.9	68.4
J3034	5.3	298.2	477.9	77.9
J3035	5.3	283.4	477.9	84.3
J3036	5.3	277.4	477.9	86.9
J3037	5.3	279.6	477.9	85.9
J3038	5.3	275	478	87.9
J3039	5.3	280.9	478	85.4
J3040	5.3	295.4	478	79.1
J3041	5.3	294.7	475.3	78.3
J3042	5.3	281.3	475	83.9
J3043	5.3	282.8	475.1	83.3
J3044	5.3	294.5	474.5	78
J3045	5.3	295.9	474.4	77.4
J3046	5.3	294	474.1	78.1
J3047	5.2	283.4	473.9	82.5
J3048	5.2	248.5	473.3	97.4
J3049	5.3	336.8	477.9	61.2
J3050	5.2	290.1	474.7	80
J3052	5.3	285.8	477.8	83.2
J3053	5.3	282.4	477.8	84.7
J3054	0	306.5	477.8	74.2
J3055	0	288.2	477.8	82.2
J3056	2.4	86.9	475.1	168.2
J3057	5.3	111.7	475.1	157.5
J3058	5.3	157.2	475.5	138
J3059	5.3	167.8	475.7	133.4
J3060	5.3	222.9	476.9	110
J3061	5.3	305.3	477.8	74.7
J3062	0	307.8	477.8	73.7
J31	0	407.5	509.9	44.4
J32	0	406.5	509.9	44.8
J33	0	403.4	509.8	46.1
J34	2.9	404.2	509.7	45.7
J35	2.9	393.8	508.8	49.8
J36	2.9	392.1	508.8	50.6
J37	2.9	393.6	508.8	49.9
J38	2.9	388.5	508.8	52.1
J39	2.9	381.9	508.5	54.9
J4	2.9	370.8	509.1	59.9

J40	2.9	388.8	508.3	51.8
J41	2.9	383.2	508.3	54.2
J42	2.9	391.9	508.2	50.4
J43	2.9	392.4	508.2	50.2
J44	2.9	393.2	508.2	49.8
J45	2.9	391.6	508.2	50.5
J46	2.9	390.8	508.2	50.9
J47	2.9	375.8	508.2	57.3
J48	2.9	368.2	508.2	60.7
J49	2.9	360.9	508.2	63.8
J5	2.9	399.6	509.1	47.4
J50	2.9	361	508.2	63.8
J51	2.9	359.1	508.2	64.6
J52	2.9	370.7	508.2	59.6
J53	2.9	323.5	508.2	80
J54	2.9	313.1	508.2	84.5
J55	2.9	381.2	508.4	55.1
J56	2.9	380.1	508.4	55.6
J57	2.9	370	508.4	60
J58	2.9	371	508.4	59.5
J59	2.9	367	508.4	61.2
J6	2.9	400	509.1	47.3
J60	2.9	370	508.4	60
J61	2.9	371.9	508.4	59.1
J62	2.9	373.7	508.4	58.3
J63	2.9	382.4	508.4	54.6
J64	2.9	372.6	508.4	58.8
J65	2.9	359.9	508.1	64.2
J66	2.9	387.6	508.1	52.2
J67	2.9	384.5	508.1	53.5
J68	2.9	384.9	508.1	53.4
J69	2.9	380.7	508.1	55.2
J7	2.9	400.1	509.1	47.2
J70	2.9	377.1	508.1	56.7
J71	2.9	375.7	508.1	57.4
J72	2.9	375	508.1	57.7
J73	2.9	375.5	508.1	57.4
J74	2.9	376.6	508.1	56.9
J75	2.9	380.2	508	55.4
J76	2.9	373.8	508	58.2
J77	2.9	375.6	508	57.4
J78	2.9	371.6	508	59.1
J79	2.9	367.4	508	60.9
J8	2.9	400.8	509.1	46.9
J80	2.9	368.6	508	60.4

J81	2.9	369.9	507.9	59.8
J82	2.9	366.4	507.9	61.3
J83	2.9	364.8	507.9	62
J84	2.9	354.7	507.9	66.4
J85	2.9	363.7	507.9	62.5
J86	2.9	365.9	507.9	61.5
J87	2.9	351.5	508	67.8
J88	2.9	358	508	65
J89	2.9	356.1	508	65.8
J9	2.9	401	509.1	46.8
J90	2.9	363.9	508	62.4
J91	2.9	363.7	508	62.5
J92	2.9	353.5	507.9	66.9
J93	2.9	360.3	507.9	64
J94	2.9	349.5	507.9	68.7
J95	2.9	354.2	507.9	66.6
J96	2.9	351.6	508	67.7
J97	2.9	350.9	508	68.1
J98	2.9	347.7	508	69.4
J99	2.9	346	508	70.2

2014 Peak Hour Demand Scenario
Existing System- No Improvments

ID	Demand (gpm)	Elevation (ft)	Head (ft)	Pressure (psi)
J1	0	372.8	509.1	59.1
J10	2.9	400.2	509	47.1
J100	2.9	332.2	508	76.1
J1000	0	381.2	394	5.5
J1001	0	360.4	393.9	14.5
J1002	0	277.6	393.7	50.3
J1003	2	267	393.7	54.9
J1004	2	262.4	393.7	56.9
J1005	2	263.5	393.7	56.4
J1006	2	265.1	393.7	55.7
J1007	2	272.7	393.7	52.4
J1008	2	272.3	393.7	52.6
J1009	2	271.7	393.7	52.9
J101	2.9	323.5	508	79.9
J1010	2	277.9	393.7	50.2
J1011	2	288.5	393.7	45.6
J1012	2	272.5	393.7	52.5
J1013	2	274.7	393.7	51.6
J1014	2	265.5	393.7	55.5
J1015	2	278.4	393.7	49.9
J1016	2	279.7	393.7	49.4
J1017	0	315.2	393.7	34
J1018	0	321.1	393.7	31.4
J1019	2	284.4	393.7	47.3
J102	2.9	335.1	508	74.9
J1020	2	286	393.7	46.7
J1021	2.2	298.3	393.7	41.3
J1022	2	300.5	393.8	40.4
J1023	2	305.8	393.8	38.1
J1024	2	309.3	393.8	36.6
J1025	2	311.4	393.8	35.7
J1026	2	301.8	393.8	39.9
J1027	2	302.7	393.8	39.5
J1028	0	371.3	393.9	9.8
J1029	0	380.9	394	5.7
J103	2.9	335.2	507.9	74.9
J1030	0	371.2	393.9	9.9
J1031	0	373.3	393.9	9
J1032	2	304.3	393.7	38.7
J1033	2	301	393.8	40.2
J1034	2	292.7	393.8	43.8
J1035	2	294.4	393.8	43.1
J1036	2	296.8	393.8	42
J1037	2	296.8	393.8	42

J1038	2	295.5	393.8	42.6
J1039	2	295.7	393.8	42.5
J104	2.9	332.5	507.9	76
J1040	2	297.2	393.8	41.9
J1041	2	302.8	393.8	39.4
J1042	2	301.6	393.8	39.9
J1043	2	303.2	393.8	39.2
J1044	2	303.5	393.8	39.1
J1045	2	307.6	393.8	37.3
J1046	2	305.1	393.8	38.4
J1047	2	313.5	393.8	34.8
J1048	2	309.9	393.8	36.3
J1049	2	311.3	393.8	35.7
J105	2.9	317.7	508	82.4
J1050	2	308.1	393.8	37.1
J1051	2	293	393.8	43.7
J1052	2	298.1	393.8	41.5
J1053	2	302.1	393.7	39.7
J1054	2	297.4	393.7	41.7
J1055	2	297.7	393.7	41.6
J1056	2	277.5	393.7	50.4
J1057	2	291.3	393.7	44.4
J1058	2	278.1	393.7	50.1
J1059	2.2	226.7	393.7	72.4
J106	2.9	399.8	508.9	47.3
J1060	2	140.1	393.7	109.9
J1061	2	269.4	393.7	53.9
J1062	2	267.7	393.7	54.6
J1063	2	282.9	393.7	48
J1064	2	265.9	393.7	55.4
J1065	2	263.4	393.7	56.5
J1066	2	264.8	393.7	55.8
J1067	2	262.3	393.7	56.9
J1068	2	272.6	393.7	52.5
J1069	2	260.8	393.7	57.6
J107	2.9	365.6	508.1	61.7
J1070	2	261.1	393.7	57.5
J1071	2	285.2	393.7	47
J1072	2	266	393.7	55.3
J1073	2	235.4	393.5	68.5
J1074	2	232.5	393.5	69.8
J1075	2	264.4	393.6	56
J1076	2	254.8	393.5	60.1
J1077	2	264.5	393.5	55.9
J1078	2	266.5	393.5	55

J1079	2	259.4	393.5	58.1
J108	2.9	382.9	508	54.2
J1080	2	239.6	393.5	66.7
J1081	2	248.9	393.5	62.7
J1082	2	251.1	393.5	61.7
J1083	2	251.5	393.5	61.6
J1084	2	273.9	393.5	51.8
J1085	2	275.4	393.5	51.2
J1086	2	305	393.5	38.4
J1087	2	259.8	393.5	58
J1088	2	270.9	393.6	53.1
J1089	0	297	393.6	41.8
J109	2.9	373.5	508	58.3
J1090	2	195.6	393.5	85.8
J1091	2	196.3	393.5	85.5
J1092	2	193.1	393.5	86.8
J1093	2	183.9	393.5	90.8
J1094	2	182.3	393.5	91.5
J1095	2	224.9	393.5	73.1
J1096	2	224.9	393.5	73.1
J1097	2	220	393.5	75.2
J1098	2	190.2	393.5	88.1
J1099	2	206.1	393.5	81.2
J11	2.9	403.1	509.6	46.1
J110	2.9	336.6	508.3	74.4
J1100	2	208.5	393.5	80.2
J1101	2	165	393.5	99
J1102	2	171.3	393.5	96.3
J1103	2	174.8	393.5	94.8
J1104	2	181	393.5	92.1
J1105	2	180.9	393.5	92.1
J1106	2	161.8	393.5	100.4
J1107	2	164.3	393.5	99.3
J1108	2	152.5	393.5	104.4
J1109	2	161.6	393.5	100.5
J111	2.9	379.7	508.1	55.6
J1110	2	160.7	393.5	100.9
J1111	2	170	393.5	96.9
J1112	2	159.1	393.5	101.6
J1113	2	161.9	393.5	100.4
J1114	2.7	159.8	393.5	101.3
J1116	2	188	393.5	89
J1117	2	187.1	393.5	89.4
J1118	2	186.5	393.4	89.7
J1119	2	184.4	393.4	90.6

J112	2.9	364.3	508.1	62.3
J1120	2	187.1	393.4	89.4
J1121	2	260	393.4	57.8
J1122	2	195.6	393.4	85.7
J1123	2	121.3	393.4	117.9
J1124	2	120.4	393.4	118.3
J1125	2	93	393.4	130.2
J1126	2	106.7	393.4	124.2
J1127	2	118.3	393.4	119.2
J1128	2	101.3	393.4	126.6
J1129	2	139.7	393.4	109.9
J113	2.9	355.7	508.1	66
J1130	2	89.4	393.4	131.7
J1131	2	140.4	393.4	109.6
J1132	2	140	393.4	109.8
J1133	2	142.9	393.4	108.6
J1134	2	162.2	393.4	100.2
J1135	2	160.7	393.4	100.9
J1136	2	170.7	393.5	96.5
J1137	2	161.4	393.4	100.5
J1138	2	156.9	393.4	102.5
J1139	2	134.4	393.4	112.2
J114	2.9	354.8	508	66.4
J1140	2	132.2	393.4	113.2
J1141	2	127.4	393.4	115.3
J1142	2	153.7	393.4	103.9
J1143	2	155.7	393.4	103
J1144	2	185.5	393.5	90.1
J1145	2	192.8	393.5	86.9
J1146	2	207.7	393.5	80.5
J1147	2	237.8	393.5	67.5
J1148	2	238.2	393.5	67.3
J1149	2	231.8	393.5	70.1
J115	2.9	350.4	508	68.3
J1150	2	239.1	393.5	66.9
J1151	2	257.4	393.5	59
J1152	2	279.1	393.5	49.5
J1153	2	273.7	393.5	51.9
J1154	2	223.1	393.5	73.8
J1155	2	211.8	393.5	78.7
J1156	2	206.5	393.5	81
J1157	2	200	393.5	83.8
J1158	2	198.9	393.4	84.3
J1159	2	192.1	393.4	87.3
J116	2.9	348.7	508	69

J1160	2	195.8	393.4	85.6
J1161	2	188.2	393.4	88.9
J1162	2	190.9	393.4	87.8
J1163	2	168.7	393.4	97.4
J1164	2	166.2	393.4	98.5
J1165	2	168.5	393.4	97.5
J1166	2	169.9	393.4	96.8
J1167	2	164.3	393.4	99.3
J1168	2	150.3	393.4	105.4
J1169	2	151.7	393.4	104.7
J117	2.9	348.7	508	69
J1170	2	143.8	393.4	108.2
J1171	2.7	104.4	393.4	125.2
J1172	0	375.1	393.7	8.1
J1173	2	195.2	393.5	85.9
J1174	2	242.5	393.5	65.4
J1175	2	247.8	393.5	63.1
J1176	2	242.7	393.5	65.3
J1177	2	245.8	393.5	64
J1178	2	246.2	393.5	63.8
J1179	2	226.8	393.5	72.2
J118	2.9	346.2	508	70.1
J1180	2	234.8	393.5	68.7
J1181	2	271.7	393.7	52.9
J1182	2	271	393.7	53.2
J119	2.9	351.2	508	67.9
J1191	0	80.9	236.8	67.5
J1192	0	170	237.8	29.4
J1193	0	170	237.8	29.4
J1194	0	170	355.9	80.6
J1195	0	170	356	80.6
J12	2.9	403.7	509.6	45.9
J120	2.9	349.9	508	68.5
J121	2.9	346.4	508	70
J122	2.9	338.7	507.9	73.3
J123	2.9	342.5	507.8	71.6
J124	2.9	341.6	507.8	72
J125	2.9	343.3	507.8	71.3
J126	2.9	331.4	507.8	76.5
J127	3	328.5	507.8	77.7
J128	2.9	326.8	507.8	78.4
J129	2.9	330.2	507.8	77
J13	2.9	401.4	509.6	46.9
J130	2.9	287.7	507.8	95.4
J131	2.9	352.9	508	67.2

J132	2.9	353.7	508	66.9
J133	2.9	347	508	69.7
J134	2.9	372.2	508	58.8
J135	2.9	356.6	508	65.6
J136	2.9	375.7	508	57.3
J137	2.9	349.9	508	68.5
J138	2.9	351.2	508	67.9
J139	2.9	368	508	60.7
J14	2.9	399.5	509.6	47.7
J140	2.9	366.6	508	61.2
J141	2.9	345.7	508	70.3
J142	2.9	355.8	508	65.9
J143	2.9	345.7	508	70.3
J144	2.9	339.4	508	73
J145	2.9	338.2	508	73.6
J146	2.9	337.3	508.3	74.1
J147	2.9	337.9	508	73.7
J148	2.9	345.8	508	70.3
J149	2.9	348.7	508	69
J15	2.9	384.7	509.6	54.1
J150	2.9	352	508	67.6
J151	2.9	329.3	508	77.4
J152	2.9	329.7	508	77.2
J153	2.9	321.7	508	80.7
J154	2.9	314.3	508	83.9
J155	2.9	311.5	508	85.1
J156	2.9	319.6	508	81.6
J157	2.9	302.3	508	89.1
J158	2.9	296.9	508	91.5
J159	2.9	302.9	508	88.9
J16	2.9	379.6	509.6	56.3
J160	2.9	301	508	89.7
J161	2.9	303.4	508	88.7
J162	2.9	311.7	508.1	85.1
J163	2.9	323.6	508.1	79.9
J164	2.9	306.2	508.1	87.5
J165	2.9	303.4	508.1	88.7
J166	2.9	300.2	508.1	90.1
J167	2.9	295.2	508	92.2
J168	2.9	296.5	508	91.6
J169	2.9	292.3	508	93.4
J17	2.9	375.3	509.6	58.2
J170	2.9	294.4	507.9	92.5
J171	2.9	289.3	507.9	94.7
J172	2.9	306.8	507.9	87.1

J173	2.9	308.6	507.9	86.4
J174	2.9	303.3	507.9	88.7
J175	2.9	295.6	507.8	92
J176	2.9	287	507.8	95.7
J177	2.9	276.8	507.7	100.1
J178	2.9	276.7	507.7	100.1
J179	2.9	262	507.7	106.5
J18	2.9	387	509.6	53.1
J180	2.9	259.4	507.7	107.6
J181	2.9	241.6	507.7	115.3
J182	2.9	239.7	507.7	116.1
J183	2.9	234	507.7	118.6
J184	2.9	242.7	507.7	114.8
J185	2.9	218.6	507.7	125.2
J186	2.9	220.5	507.7	124.4
J187	2.9	194.1	507.7	135.9
J188	2.9	228.6	507.7	120.9
J189	2.9	222.1	507.7	123.7
J19	2.9	391.9	509.6	51
J190	2.9	226	507.7	122
J191	2.9	253.9	507.7	110
J192	2.9	257.8	507.7	108.3
J193	2.9	326.3	508	78.7
J194	2.9	335	508	74.9
J195	2.9	333	507.9	75.8
J196	2.9	237.3	507.7	117.1
J197	2.9	242	507.7	115.1
J198	2.9	260.7	507.7	107
J199	2.9	270.5	507.7	102.7
J2	2.9	365.1	509.1	62.4
J20	2.9	391.4	509.6	51.2
J200	2.9	274.2	507.7	101.1
J2000	0	220.7	238	7.5
J2001	0	208.7	238.9	13.1
J2002	0	205.1	240.4	15.3
J2004	5.3	175.7	337.4	70.1
J2005	5.3	171.7	337.4	71.8
J2006	5.3	176.5	337.4	69.7
J2007	5.3	178.5	337.4	68.8
J2008	5.3	193.1	337.4	62.5
J2009	5.3	189.4	337.4	64.1
J201	2.9	273.1	507.7	101.6
J2010	2.9	145.8	238.9	40.3
J2011	2.9	143.4	238.8	41.3
J2012	2.9	142.5	238.8	41.7

J2013	2.9	145.8	238.8	40.3
J2014	2.9	150.9	238.8	38.1
J2015	2.9	152.5	238.8	37.4
J2016	2.9	165.9	238.8	31.6
J2017	2.9	169.5	238.8	30
J2018	2.9	130.3	238.3	46.8
J2019	2.9	95.8	237.2	61.3
J202	2.9	221.3	507.7	124.1
J2020	2.9	93.2	237.1	62.4
J2021	2.9	99.1	237	59.8
J2022	2.9	117.3	236.8	51.8
J2023	2.9	134.7	236.8	44.2
J2024	2.9	122.3	236.7	49.6
J2025	2.9	106.2	236.7	56.6
J2026	2.9	96.2	236.7	60.9
J2027	2.9	84.9	236.7	65.8
J2028	2.9	87.2	236.7	64.8
J2029	2.9	77.3	236.7	69.1
J203	2.9	292	507.7	93.4
J2030	2.9	87.2	236.7	64.8
J2031	2.9	68.4	236.7	72.9
J2032	2.9	69.5	236.7	72.5
J2033	2.9	80.3	236.7	67.8
J2034	2.9	81.7	236.7	67.2
J2035	2.9	87.1	236.7	64.8
J2036	2.9	75.9	236.7	69.7
J2037	2.9	65.3	236.7	74.3
J2038	2.9	58.3	236.7	77.3
J2039	2.9	58	236.7	77.4
J204	2.9	291.9	507.7	93.5
J2040	2.9	58.1	236.7	77.4
J2041	2.9	58.2	236.7	77.3
J2042	2.9	58.6	236.7	77.2
J2043	2.9	58.1	236.7	77.4
J2044	2.9	75	236.7	70.1
J2045	2.9	75.1	236.7	70
J2046	2.9	58.1	236.7	77.4
J2047	2.9	44.2	236.7	83.4
J2048	2.9	20.1	236.7	93.9
J2049	2.9	16.1	236.7	95.6
J205	2.9	285.9	507.7	96.1
J2050	2.9	28.5	236.7	90.2
J2051	3.1	42.2	236.7	84.3
J2052	2.9	41.2	236.7	84.7
J2053	2.9	19.6	236.7	94.1

J2054	2.9	18.7	236.7	94.4
J2055	2.9	43.5	236.7	83.7
J2056	2.9	42.7	236.7	84.1
J2057	2.9	42.2	236.7	84.3
J2058	2.9	44	236.7	83.5
J2059	2.9	43.9	236.7	83.5
J206	2.9	293.7	507.7	92.7
J2060	2.9	48	236.7	81.8
J2061	2.9	52.1	236.7	80
J2062	2.9	53	236.7	79.6
J2063	2.9	54.3	236.7	79
J2064	2.9	55.7	236.7	78.4
J2065	2.9	55.2	236.7	78.6
J2066	2.9	56.4	236.7	78.1
J2067	2.9	82.4	236.7	66.8
J2068	2.9	93.6	236.7	62
J2069	2.9	41.6	236.7	84.5
J207	2.9	331.9	507.7	76.2
J2070	2.9	38.5	236.7	85.9
J2071	2.9	28.9	236.7	90
J2072	2.9	44.8	236.7	83.2
J2073	2.9	44.7	236.7	83.2
J2074	2.9	45.8	236.7	82.7
J2075	2.9	66	236.7	74
J2076	2.9	32.8	236.7	88.3
J2077	2.9	24.1	236.7	92.1
J2078	2.9	61.7	236.8	75.9
J2079	2.9	62.4	236.8	75.5
J208	2.9	321.7	507.7	80.6
J2080	2.9	67	236.8	73.6
J2081	2.9	68.9	236.8	72.7
J2082	2.9	69	236.8	72.7
J2083	2.9	68.2	236.8	73
J2084	2.9	69.2	236.8	72.6
J2085	2.9	77.4	236.8	69.1
J2086	2.9	79.6	236.8	68.1
J2087	2.9	86.2	236.8	65.2
J2088	2.9	87.9	236.8	64.5
J2089	2.9	84.1	236.8	66.1
J209	2.9	324.1	507.7	79.5
J2090	2.9	81.7	236.8	67.2
J2091	2.9	128.9	236.8	46.7
J2092	2.9	59	236.7	77
J2093	2.9	59.4	236.7	76.8
J2094	2.9	57.9	236.7	77.5

J2095	2.9	58.7	236.7	77.1
J2096	2.9	43.1	236.8	83.9
J2097	2.9	41.6	236.8	84.5
J2098	2.9	33.6	236.8	88
J2099	2.9	43.2	236.8	83.9
J21	2.9	380.9	509.6	55.8
J210	2.9	323.8	507.7	79.7
J2100	2.9	24.9	236.7	91.8
J2101	2.9	24.1	236.7	92.1
J2102	2.9	29.3	236.7	89.9
J2103	2.9	26.8	236.7	90.9
J2104	2.9	27.9	236.7	90.5
J2105	2.9	34.8	236.7	87.5
J2106	2.9	41.7	236.7	84.5
J2107	2.9	45.8	236.7	82.7
J2108	2.9	72.3	236.8	71.2
J2109	2.9	93.4	236.8	62.1
J211	2.9	318.7	507.7	81.9
J2110	2.9	90.3	236.8	63.5
J2111	2.9	98.8	236.8	59.8
J2112	2.9	98.4	236.8	60
J2113	2.9	114	236.8	53.2
J2114	2.9	120	236.7	50.6
J2115	2.9	130	236.7	46.2
J2116	2.9	132	236.7	45.4
J2117	2.9	135	236.7	44.1
J2118	2.9	133	236.7	44.9
J2119	2.9	135	236.7	44.1
J212	2.9	310.4	507.7	85.5
J2120	2.9	122	236.7	49.7
J2121	2.9	128	236.7	47.1
J2122	2.9	120	236.7	50.6
J2123	2.9	108.6	236.7	55.5
J2124	2.9	123.2	236.7	49.2
J2125	2.9	110.5	236.7	54.7
J2126	2.9	109.2	236.7	55.3
J2127	2.9	67.4	236.7	73.4
J2128	2.9	62.8	236.7	75.4
J2129	2.9	26.5	236.7	91.1
J213	2.9	293.2	507.8	93
J2130	2.9	27.6	236.7	90.6
J2131	2.9	30.7	236.7	89.3
J2132	2.9	30.2	236.7	89.5
J2133	2.9	41.6	236.7	84.5
J2134	3.1	34.7	236.7	87.5

J2135	2.9	34	236.7	87.8
J2137	2.9	34.2	236.7	87.8
J2138	2.9	38.4	236.7	85.9
J2139	2.9	38.2	236.7	86
J214	2.9	375.9	507.6	57.1
J2140	2.9	41.8	236.8	84.5
J2141	2.9	98.9	236.8	59.8
J2142	2.9	98.9	237	59.8
J2143	2.9	112.9	237	53.7
J2144	2.9	97.9	237	60.3
J2145	2.9	97.5	237	60.5
J2146	2.9	95.9	237.2	61.2
J2147	2.9	104.9	237.2	57.3
J2148	2.9	100.2	237.4	59.5
J2149	2.9	124.6	237.6	49
J215	2.9	379.6	507.6	55.5
J2150	2.9	130.2	237.6	46.5
J2151	2.9	136.5	237.6	43.8
J2152	2.9	113.9	237.6	53.6
J2153	2.9	47.5	236.8	82
J2154	2.9	46.9	236.8	82.3
J2155	2.9	47.6	236.8	82
J2156	2.9	52.5	236.8	79.8
J2157	2.9	49.8	236.8	81
J2158	2.9	65.1	236.8	74.4
J2159	2.9	66.2	236.8	73.9
J216	2.9	392.6	507.6	49.8
J2160	2.9	96.5	236.8	60.8
J2161	2.9	93.6	236.8	62
J2162	2.9	95.6	236.8	61.2
J2163	2.9	53.1	236.8	79.6
J2164	2.9	32.7	236.8	88.4
J2165	2.9	46.7	236.8	82.3
J2166	2.9	84.7	236.8	65.9
J2167	0	194	237.7	19
J2168	2.9	178	237.7	25.9
J2169	2.9	183.4	237.7	23.5
J217	2.9	392.5	507.6	49.9
J2170	0	203	237.9	15.1
J2171	0	209.2	239.4	13.1
J2172	0	209.1	239.3	13.1
J2173	0	159.4	238.3	34.2
J2174	2.9	138.7	237.7	42.9
J2175	2.9	135.6	237.7	44.2
J2176	2.9	139.9	237.3	42.2

J2177	2.9	143.8	237.2	40.5
J2178	2.9	142.6	237	40.9
J2179	2.9	146.1	237	39.4
J218	2.9	392.3	507.6	50
J2180	2.9	156.3	236.8	34.9
J2181	2.9	108.8	236.7	55.4
J2182	2.9	107.8	236.7	55.9
J2183	2.9	92.1	236.7	62.6
J2184	2.9	90.2	236.7	63.5
J2185	2.9	86.5	236.7	65.1
J2186	2.9	104.1	236.7	57.4
J2187	2.9	94.8	236.6	61.4
J2188	2.9	90.3	236.6	63.4
J2189	2.9	79.1	236.6	68.2
J219	2.9	394.7	507.6	48.9
J2190	2.9	37.2	236.5	86.4
J2191	2.9	26.7	236.5	90.9
J2192	2.9	39.1	236.5	85.5
J2193	2.9	30.4	236.5	89.3
J2194	2.9	23.7	236.5	92.2
J2195	2.9	17.8	236.5	94.8
J2196	2.9	17.2	236.5	95
J2197	2.9	21.9	236.5	93
J2198	2.9	19.8	236.5	93.9
J2199	2.9	34.1	236.5	87.7
J22	2.9	374.3	509.6	58.6
J220	2.9	383.7	507.6	53.7
J2200	2.9	70.9	236.5	71.8
J2201	2.9	73.7	236.5	70.5
J2202	2.9	17.8	236.5	94.8
J2203	2.9	20.1	236.5	93.8
J2204	2.9	19.6	236.5	94
J2205	2.9	20.1	236.5	93.8
J2206	2.9	15.3	236.5	95.9
J2207	2.9	18.8	236.6	94.3
J2208	2.9	35.2	236.6	87.2
J2209	2.9	39.1	236.6	85.6
J221	2.9	383.6	507.6	53.7
J2210	2.9	13.1	236.6	96.8
J2211	2.9	12.7	236.6	97
J2212	2.9	15.4	236.6	95.9
J2213	2.9	17.9	236.6	94.8
J2214	2.9	18.9	236.6	94.3
J2215	2.9	23.4	236.6	92.4
J2216	2.9	45.2	236.6	82.9

J2217	2.9	35.4	236.6	87.2
J2218	2.9	36.3	236.6	86.8
J2219	2.9	61.5	236.6	75.9
J222	2.9	372.3	507.6	58.6
J2220	2.9	80.2	236.6	67.8
J2221	2.9	58.9	236.6	77
J2222	2.9	60.2	236.6	76.4
J2223	2.9	71.6	236.6	71.5
J2224	2.9	75	236.6	70
J2225	2.9	67.9	236.6	73.1
J2226	2.9	67.2	236.6	73.4
J2228	2.9	32.7	236.6	88.4
J2229	2.9	41.9	236.6	84.4
J223	2.9	380.4	507.6	55.1
J2230	2.9	55.6	236.6	78.4
J2231	2.9	55.9	236.6	78.3
J2232	2.9	68.5	236.6	72.9
J2233	2.9	68.1	236.6	73
J2234	2.9	48	236.6	81.7
J2235	2.9	47.1	236.7	82.1
J2236	2.9	46.8	236.7	82.3
J2237	2.9	72.5	236.7	71.1
J2238	2.9	74	236.7	70.5
J2239	2.9	86.4	236.7	65.1
J224	2.9	374.3	507.6	57.8
J2240	2.9	91.1	236.7	63.1
J2241	2.9	114.7	236.7	52.9
J2242	2.9	118.6	236.7	51.2
J2243	2.9	120.9	236.7	50.2
J2244	2.9	126.5	236.8	47.8
J2245	2.9	54.3	236.7	79
J2246	2.9	89.4	236.7	63.8
J2247	2.9	92.5	236.7	62.5
J2248	2.9	55.2	236.7	78.6
J2249	2.9	56	236.7	78.3
J225	2.9	379.7	507.6	55.4
J2250	2.9	65.5	236.7	74.2
J2251	2.9	103.2	236.7	57.8
J2252	2.9	105.2	236.8	57
J2253	2.9	108	236.8	55.8
J2254	2.9	108.5	236.8	55.6
J2255	2.9	115.4	236.8	52.6
J2256	2.9	128.4	236.8	47
J2257	2.9	117.7	236.8	51.6
J2258	2.9	118.4	236.9	51.3

J2259	2.9	124.8	237	48.6
J226	2.9	376.1	507.6	57
J2260	2.9	112.9	236.8	53.7
J2261	2.9	108.7	236.8	55.5
J2262	2.9	108.9	236.8	55.4
J2263	2.9	100.5	236.7	59
J2264	2.9	110	236.8	54.9
J2265	2.9	137.1	237.6	43.6
J2266	2.9	131.8	237.1	45.7
J2267	2.9	41.2	236.7	84.7
J2268	2.9	43.5	236.7	83.7
J2269	2.9	19.7	236.7	94
J227	2.9	373.2	507.6	58.3
J2270	2.9	19.5	236.7	94.1
J2271	2.9	13.7	236.7	96.6
J2272	2.9	19	236.7	94.3
J2273	2.9	14.3	236.7	96.4
J2274	2.9	12.8	236.7	97
J2275	2.9	18.9	236.7	94.4
J2276	2.9	19.7	236.7	94
J2277	2.9	20.1	236.7	93.9
J2278	2.9	19.8	236.7	94
J2279	2.9	33.5	236.7	88
J228	2.9	360.1	507.6	63.9
J2280	2.9	41.6	236.7	84.5
J2281	2.9	59.8	236.7	76.7
J2282	2.9	70.5	236.7	72
J2285	2.9	81.4	236.7	67.3
J2286	2.9	22.1	236.7	93
J2287	2.9	48.3	236.7	81.6
J2288	2.9	55.5	236.7	78.5
J2289	2.9	93.9	236.7	61.9
J229	2.9	342.3	507.7	71.6
J2290	2.9	93.7	236.7	62
J2291	2.9	94	236.7	61.8
J2292	2.9	111.4	236.7	54.3
J2293	2.9	114.2	236.7	53.1
J2294	2.9	120	236.7	50.6
J2295	2.9	113.5	236.7	53.4
J2296	2.9	100.5	236.8	59.1
J2297	2.9	107.9	236.8	55.8
J2298	2.9	104.5	236.8	57.3
J2299	2.9	99.5	236.8	59.5
J23	2.9	404.2	509.7	45.7
J230	2.9	359	507.6	64.4

J2300	2.9	99.4	236.8	59.6
J2301	2.9	102.9	236.8	58
J2302	2.9	122.7	236.8	49.4
J2303	2.9	129.5	236.8	46.5
J2304	2.9	99.7	236.8	59.4
J2305	2.9	49.7	236.8	81.1
J2306	2.9	50.9	236.8	80.5
J2307	2.9	53.9	236.8	79.3
J2308	2.9	53	236.8	79.6
J2309	3.1	61.9	236.8	75.8
J231	2.9	360.5	507.6	63.7
J2310	2.9	56.6	236.8	78.1
J2311	2.9	55	236.8	78.8
J2312	2.9	56.1	236.8	78.3
J2313	2.9	51.5	236.8	80.3
J2314	2.9	55.4	236.8	78.6
J2315	2.9	63.7	236.8	75
J2316	2.9	68.9	236.8	72.7
J2317	3.1	55.6	236.8	78.5
J2318	2.9	68.8	236.8	72.8
J2319	2.9	65.7	236.8	74.2
J232	2.9	355.9	507.6	65.8
J2320	2.9	64.3	236.8	74.7
J2321	2.9	66.9	236.8	73.6
J2322	2.9	68	236.8	73.2
J2323	2.9	72.7	236.8	71.1
J2324	2.9	75.4	236.8	69.9
J2325	2.9	61	236.8	76.2
J2326	2.9	55.5	236.8	78.5
J2327	2.9	55.5	236.8	78.6
J2328	2.9	54.8	236.8	78.9
J2329	2.9	53.3	236.8	79.5
J233	2.9	354.1	507.7	66.5
J2330	2.9	84.1	236.8	66.2
J2331	2.9	67.1	236.8	73.5
J2332	2.9	64.2	236.8	74.8
J2333	2.9	93.2	236.8	62.2
J2334	2.9	88.3	236.8	64.4
J2335	2.9	78.7	236.8	68.5
J2336	2.9	75.8	236.8	69.8
J2337	2.9	64.2	236.8	74.8
J2338	2.9	61.2	236.8	76.1
J2339	2.9	59.5	236.8	76.8
J234	2.9	304	507.7	88.2
J2340	2.9	61	236.8	76.2

J2341	2.9	60.7	236.8	76.3
J2342	2.9	58.3	236.8	77.3
J2343	2.9	57	236.8	77.9
J2344	2.9	57.7	236.8	77.6
J2345	2.9	59.6	236.8	76.8
J2346	2.9	63.4	236.8	75.2
J2347	2.9	133.9	236.8	44.6
J2348	2.9	108.6	236.8	55.6
J2349	2.9	58.7	236.8	77.2
J235	2.9	290.7	508	94.1
J2350	2.9	57.3	236.8	77.8
J2351	2.9	57.7	236.8	77.6
J2352	2.9	64.8	236.8	74.5
J2353	2.9	63.2	236.8	75.2
J2354	2.9	63.6	236.8	75
J2355	2.9	65.2	236.8	74.4
J2356	2.9	59.4	236.8	76.9
J2357	2.9	60	236.8	76.6
J2358	2.9	66.7	236.8	73.7
J2359	2.9	69	236.8	72.7
J236	2.9	313.2	507.7	84.3
J2360	2.9	83.5	236.8	66.4
J2361	2.9	70	236.8	72.3
J2362	2.9	62.5	237	75.6
J2363	2.9	61.6	237	76
J2364	2.9	66.5	237	73.9
J2365	2.9	58.4	236.9	77.4
J2366	2.9	62	237	75.8
J2367	2.9	61.6	237	76
J2368	2.9	60.8	237	76.4
J2369	2.9	61.3	237	76.1
J237	2.9	307.4	507.7	86.8
J2370	2.9	58.8	237	77.2
J2371	2.9	58.1	237	77.5
J2372	2.9	57.4	236.9	77.8
J2373	2.9	56.4	236.9	78.2
J2374	2.9	100.7	236.8	59
J2375	2.9	93.1	236.8	62.2
J2376	2.9	77.2	236.8	69.1
J2377	2.9	58.5	236.7	77.2
J2378	2.9	48.3	236.7	81.6
J2379	2.9	72.7	236.7	71.1
J238	2.9	294.3	507.8	92.5
J2380	2.9	58.1	236.7	77.4
J2381	2.9	47.6	236.7	82

J2382	2.9	49.1	236.7	81.3
J2383	2.9	63.6	236.7	75
J2384	2.9	72.5	236.7	71.1
J2385	2.9	93.7	236.7	62
J2386	2.9	98.3	236.7	60
J2387	2.9	116.5	236.7	52.1
J2388	2.9	106.2	236.7	56.6
J2389	2.9	90.6	236.8	63.3
J2390	2.9	79.9	236.7	68
J2391	2.9	92.6	236.8	62.5
J2392	2.9	90.5	236.9	63.4
J2393	2.9	161.6	237.1	32.7
J2394	2.9	152.5	237	36.6
J2395	0	188.8	237.5	21.1
J2396	2.9	187.3	355.9	73.1
J2397	3.1	184.6	355.9	74.2
J2398	0	197.1	237.8	17.7
J2399	0	189.2	237.8	21.1
J24	2.9	402.2	509.7	46.6
J2400	0	170.9	237.8	29
J2401	0	171.6	355.9	79.9
J2402	2.9	164.9	355.9	82.8
J2403	2.9	156.8	355.9	86.3
J2404	2.9	140.2	355.9	93.5
J2405	2.9	194.9	355.9	69.8
J2406	2.9	76	236.7	69.6
J2407	2.9	70.3	236.7	72.1
J2408	2.9	66.6	236.7	73.7
J2409	2.9	75.7	236.7	69.8
J2410	2.9	99.9	236.7	59.3
J2411	2.9	101.9	236.7	58.4
J2412	2.9	117.3	236.7	51.7
J2413	2.9	133.1	236.7	44.9
J2414	2.9	101.6	236.7	58.5
J2415	2.9	100.6	236.7	59
J2416	2.9	100.9	236.7	58.9
J2417	2.9	100.8	236.7	58.9
J2418	2.9	100.7	236.7	58.9
J2419	2.9	97.6	236.7	60.3
J2420	2.9	100.2	236.7	59.2
J2421	2.9	100.1	236.7	59.2
J2422	2.9	104	236.7	57.5
J2423	2.9	110.1	236.7	54.9
J2424	2.9	89.7	236.7	63.7
J2425	2.9	84.6	236.7	65.9

J2426	2.9	110.6	236.7	54.6
J2427	2.9	92.2	236.7	62.6
J2428	2.9	88.9	236.7	64.1
J2429	2.9	43.2	236.7	83.8
J2430	2.9	96.6	236.7	60.7
J2431	2.9	106.2	236.7	56.6
J2432	2.9	105.7	236.7	56.8
J2433	2.9	104.7	236.7	57.2
J2434	2.9	73.2	236.7	70.9
J2435	2.9	78	236.7	68.8
J25	2.9	405.9	509.7	44.9
J2500	0	140	236.8	41.9
J2502	0	225	343.6	51.4
J2503	0	208	344.8	59.3
J2504	0	39	236.6	85.6
J2505	0	36	236.6	86.9
J2506	0	89.7	236.7	63.7
J2507	2.9	45.7	236.6	82.7
J2508	2.9	34	236.6	87.8
J2509	0	360	509.1	64.6
J2510	0	370.8	509.1	59.9
J2511	0	325.9	509.1	79.4
J2512	0	365	509.1	62.4
J2513	2.7	320	508.2	81.5
J2514	2.7	355	508.2	66.4
J2515	2.7	355	508.2	66.4
J2516	2.7	330	508.2	77.2
J2517	2.7	335	508.2	75
J2518	0	148	393.4	106.3
J2520	0	100	236.8	59.3
J2521	0	90	236.7	63.6
J2522	0	150	236.7	37.6
J2523	0	175	236.7	26.7
J2524	0	70	236.7	72.2
J2525	0	208	239.4	13.6
J2526	6.4	210	345.5	58.7
J2527	6.4	175	347.1	74.6
J2528	6.4	200	346.4	63.4
J2529	6.4	225	346.7	52.8
J2530	0	110	349.5	103.8
J2531	6.4	160	347.6	81.3
J2532	0	110	475.1	158.2
J2533	0	230	476.8	107
J2534	6.4	210	476.8	115.6
J2535	6.4	198	476.8	120.8

J2536	6.4	230	476.8	107
J2537	6.4	250	476.8	98.3
J2538	6.4	260	476.8	94
J2539	6.4	240	476.8	102.6
J2540	0	328	509.1	78.5
J2541	0	210	337.4	55.2
J2542	0	322	393.8	31.1
J2543	0	252	540	124.8
J2544	0	256	540	123.1
J2545	0	120	393.4	118.5
J2546	0	120	393.4	118.5
J2547	0	103	236.8	58
J26	0	404.7	509.7	45.5
J27	0	407.5	509.8	44.3
J28	0	406.8	509.8	44.6
J29	0	407.3	509.8	44.4
J3	2.9	325.9	509.1	79.4
J30	0	404.1	509.8	45.8
J3000	0	376	481.8	45.8
J3001	5.3	372	479.9	46.8
J3002	5.3	371	479.7	47.1
J3003	5.3	347.1	478.9	57.1
J3004	5.3	321.8	478.6	67.9
J3005	5.3	316.9	478.4	70
J3006	5.3	300.7	478.3	77
J3007	5.3	297.1	478.3	78.5
J3008	5.3	300.4	478	76.9
J3009	5.3	285.6	477.8	83.3
J3010	5.3	279.6	477.4	85.7
J3011	5.3	335.9	478.9	61.9
J3012	5.3	325.7	478.5	66.2
J3013	5.3	332.7	478.2	63
J3014	5.3	333.1	477.9	62.8
J3015	5.3	339.2	477.8	60.1
J3016	5.3	352.2	477.6	54.3
J3017	5.3	357.2	477.5	52.1
J3018	5.3	364.2	477.6	49.1
J3019	5.3	361	477.6	50.5
J3020	5.3	364	477.6	49.2
J3021	5.3	366	477.6	48.3
J3022	5.3	368	477.6	47.5
J3023	5.3	362	477.6	50.1
J3024	5.3	345.9	477.6	57.1
J3025	5.3	352.5	477.6	54.2
J3026	5.3	362.1	477	49.8

J3027	5.3	348.3	476.4	55.5
J3028	5.3	316	475.9	69.3
J3029	5.3	312	475.7	70.9
J3030	5.3	304.9	475.6	74
J3031	5.3	307	475.6	73.1
J3032	5.3	318.3	477.9	69.2
J3033	5.3	320	477.9	68.4
J3034	5.3	298.2	477.9	77.9
J3035	5.3	283.4	477.9	84.3
J3036	5.3	277.4	477.9	86.9
J3037	5.3	279.6	477.9	85.9
J3038	5.3	275	478	87.9
J3039	5.3	280.9	478	85.4
J3040	5.3	295.4	478	79.1
J3041	5.3	294.7	475.3	78.3
J3042	5.3	281.3	475	83.9
J3043	5.3	282.8	475.1	83.3
J3044	5.3	294.5	474.5	78
J3045	5.3	295.9	474.4	77.4
J3046	5.3	294	474.1	78.1
J3047	5.2	283.4	473.9	82.5
J3048	5.2	248.5	473.3	97.4
J3049	5.3	336.8	477.9	61.2
J3050	5.2	290.1	474.7	80
J3052	5.3	285.8	477.8	83.2
J3053	5.3	282.4	477.8	84.7
J3054	0	306.5	477.8	74.2
J3055	0	288.2	477.8	82.2
J3056	2.4	86.9	475.1	168.2
J3057	5.3	111.7	475.1	157.5
J3058	5.3	157.2	475.5	138
J3059	5.3	167.8	475.7	133.4
J3060	5.3	222.9	476.9	110
J3061	5.3	305.3	477.8	74.7
J3062	0	307.8	477.8	73.7
J31	0	407.5	509.9	44.4
J32	0	406.5	509.9	44.8
J33	0	403.4	509.8	46.1
J34	2.9	404.2	509.7	45.7
J35	2.9	393.8	508.8	49.8
J36	2.9	392.1	508.8	50.6
J37	2.9	393.6	508.8	49.9
J38	2.9	388.5	508.8	52.1
J39	2.9	381.9	508.5	54.9
J4	2.9	370.8	509.1	59.9

J40	2.9	388.8	508.3	51.8
J41	2.9	383.2	508.3	54.2
J42	2.9	391.9	508.2	50.4
J43	2.9	392.4	508.2	50.2
J44	2.9	393.2	508.2	49.8
J45	2.9	391.6	508.2	50.5
J46	2.9	390.8	508.2	50.9
J47	2.9	375.8	508.2	57.3
J48	2.9	368.2	508.2	60.7
J49	2.9	360.9	508.2	63.8
J5	2.9	399.6	509.1	47.4
J50	2.9	361	508.2	63.8
J51	2.9	359.1	508.2	64.6
J52	2.9	370.7	508.2	59.6
J53	2.9	323.5	508.2	80
J54	2.9	313.1	508.2	84.5
J55	2.9	381.2	508.4	55.1
J56	2.9	380.1	508.4	55.6
J57	2.9	370	508.4	60
J58	2.9	371	508.4	59.5
J59	2.9	367	508.4	61.2
J6	2.9	400	509.1	47.3
J60	2.9	370	508.4	60
J61	2.9	371.9	508.4	59.1
J62	2.9	373.7	508.4	58.3
J63	2.9	382.4	508.4	54.6
J64	2.9	372.6	508.4	58.8
J65	2.9	359.9	508.1	64.2
J66	2.9	387.6	508.1	52.2
J67	2.9	384.5	508.1	53.5
J68	2.9	384.9	508.1	53.4
J69	2.9	380.7	508.1	55.2
J7	2.9	400.1	509.1	47.2
J70	2.9	377.1	508.1	56.7
J71	2.9	375.7	508.1	57.4
J72	2.9	375	508.1	57.7
J73	2.9	375.5	508.1	57.4
J74	2.9	376.6	508.1	56.9
J75	2.9	380.2	508	55.4
J76	2.9	373.8	508	58.2
J77	2.9	375.6	508	57.4
J78	2.9	371.6	508	59.1
J79	2.9	367.4	508	60.9
J8	2.9	400.8	509.1	46.9
J80	2.9	368.6	508	60.4

J81	2.9	369.9	507.9	59.8
J82	2.9	366.4	507.9	61.3
J83	2.9	364.8	507.9	62
J84	2.9	354.7	507.9	66.4
J85	2.9	363.7	507.9	62.5
J86	2.9	365.9	507.9	61.5
J87	2.9	351.5	508	67.8
J88	2.9	358	508	65
J89	2.9	356.1	508	65.8
J9	2.9	401	509.1	46.8
J90	2.9	363.9	508	62.4
J91	2.9	363.7	508	62.5
J92	2.9	353.5	507.9	66.9
J93	2.9	360.3	507.9	64
J94	2.9	349.5	507.9	68.7
J95	2.9	354.2	507.9	66.6
J96	2.9	351.6	508	67.7
J97	2.9	350.9	508	68.1
J98	2.9	347.7	508	69.4
J99	2.9	346	508	70.2

2020 Peak Hour Demand Scenario
Existing System- No Improvments

ID	Demand (gpm)	Elevation (ft)	Head (ft)	Pressure (psi)
J1	0	372.8	508.7	58.9
J10	3.6	400.2	508.5	46.9
J100	3.6	332.2	507.1	75.8
J1000	0	381.2	393.9	5.5
J1001	0	360.4	393.8	14.5
J1002	0	277.6	393.7	50.3
J1003	1.8	267	393.7	54.9
J1004	1.8	262.4	393.7	56.9
J1005	1.8	263.5	393.7	56.4
J1006	1.8	265.1	393.6	55.7
J1007	1.8	272.7	393.7	52.4
J1008	1.8	272.3	393.7	52.6
J1009	1.8	271.7	393.7	52.8
J101	3.6	323.5	507.1	79.6
J1010	1.8	277.9	393.7	50.2
J1011	1.8	288.5	393.7	45.6
J1012	1.8	272.5	393.6	52.5
J1013	1.8	274.7	393.6	51.5
J1014	1.8	265.5	393.6	55.5
J1015	1.8	278.4	393.6	49.9
J1016	1.8	279.7	393.6	49.4
J1017	0	315.2	393.6	34
J1018	0	321.1	393.6	31.4
J1019	1.8	284.4	393.6	47.3
J102	3.6	335.1	507.1	74.5
J1020	1.8	286	393.6	46.6
J1021	1.8	298.3	393.7	41.3
J1022	1.8	300.5	393.7	40.4
J1023	1.8	305.8	393.7	38.1
J1024	1.8	309.3	393.7	36.6
J1025	1.8	311.4	393.7	35.7
J1026	1.8	301.8	393.7	39.8
J1027	1.8	302.7	393.7	39.4
J1028	0	371.3	393.9	9.8
J1029	0	380.9	393.9	5.6
J103	3.6	335.2	507.1	74.5
J1030	0	371.2	393.9	9.8
J1031	0	373.3	393.9	8.9
J1032	1.8	304.3	393.7	38.7
J1033	1.8	301	393.7	40.2
J1034	1.8	292.7	393.7	43.8
J1035	1.8	294.4	393.7	43
J1036	1.8	296.8	393.7	42
J1037	1.8	296.8	393.7	42

ID	Demand (gpm)	Elevation (ft)	Head (ft)	Pressure (psi)
J1038	1.8	295.5	393.7	42.5
J1039	1.8	295.7	393.7	42.5
J104	3.6	332.5	507.1	75.6
J1040	1.8	297.2	393.7	41.8
J1041	1.8	302.8	393.7	39.4
J1042	1.8	301.6	393.7	39.9
J1043	1.8	303.2	393.7	39.2
J1044	1.8	303.5	393.7	39.1
J1045	1.8	307.6	393.7	37.3
J1046	1.8	305.1	393.7	38.4
J1047	1.8	313.5	393.7	34.7
J1048	1.8	309.9	393.7	36.3
J1049	1.8	311.3	393.7	35.7
J105	3.6	317.7	507.1	82.1
J1050	1.8	308.1	393.7	37.1
J1051	1.8	293	393.7	43.6
J1052	1.8	298.1	393.7	41.4
J1053	1.8	302.1	393.7	39.7
J1054	1.8	297.4	393.7	41.7
J1055	1.8	297.7	393.7	41.6
J1056	1.8	277.5	393.7	50.3
J1057	1.8	291.3	393.7	44.4
J1058	1.8	278.1	393.7	50.1
J1059	1.8	226.7	393.7	72.4
J106	3.6	399.8	508.4	47.1
J1060	1.8	140.1	393.7	109.9
J1061	1.8	269.4	393.7	53.8
J1062	1.8	267.7	393.7	54.6
J1063	1.8	282.9	393.7	48
J1064	1.8	265.9	393.7	55.4
J1065	1.8	263.4	393.7	56.5
J1066	1.8	264.8	393.7	55.8
J1067	1.8	262.3	393.7	56.9
J1068	1.8	272.6	393.7	52.5
J1069	1.8	260.8	393.7	57.6
J107	3.6	365.6	507.2	61.4
J1070	1.8	261.1	393.7	57.4
J1071	1.8	285.2	393.7	47
J1072	1.8	266	393.7	55.3
J1073	1.8	235.4	393.5	68.5
J1074	1.8	232.5	393.5	69.8
J1075	1.8	264.4	393.6	56
J1076	1.8	254.8	393.5	60.1
J1077	1.8	264.5	393.5	55.9

ID	Demand (gpm)	Elevation (ft)	Head (ft)	Pressure (psi)
J1078	1.8	266.5	393.5	55
J1079	1.8	259.4	393.5	58.1
J108	3.6	382.9	507.2	53.9
J1080	1.8	239.6	393.5	66.7
J1081	1.8	248.9	393.5	62.7
J1082	1.8	251.1	393.5	61.7
J1083	1.8	251.5	393.5	61.6
J1084	1.8	273.9	393.5	51.8
J1085	1.8	275.4	393.5	51.2
J1086	1.8	305	393.5	38.4
J1087	1.8	259.8	393.5	57.9
J1088	1.8	270.9	393.6	53.1
J1089	0	297	393.6	41.8
J109	3.6	373.5	507.1	57.9
J1090	1.8	195.6	393.5	85.8
J1091	1.8	196.3	393.5	85.5
J1092	1.8	193.1	393.5	86.8
J1093	1.8	183.9	393.5	90.8
J1094	1.8	182.3	393.5	91.5
J1095	1.8	224.9	393.5	73.1
J1096	1.8	224.9	393.5	73.1
J1097	1.8	220	393.5	75.2
J1098	1.8	190.2	393.5	88.1
J1099	1.8	206.1	393.5	81.2
J11	3.6	403.1	509.4	46
J110	3.6	336.6	507.6	74.1
J1100	1.8	208.5	393.5	80.2
J1101	1.8	165	393.5	99
J1102	1.8	171.3	393.5	96.3
J1103	1.8	174.8	393.5	94.8
J1104	1.8	181	393.5	92.1
J1105	1.8	180.9	393.5	92.1
J1106	1.8	161.8	393.5	100.4
J1107	1.8	164.3	393.5	99.3
J1108	1.8	152.5	393.5	104.4
J1109	1.8	161.6	393.5	100.5
J111	3.6	379.7	507.2	55.3
J1110	1.8	160.7	393.5	100.9
J1111	1.8	170	393.5	96.9
J1112	1.8	159.1	393.5	101.6
J1113	1.8	161.9	393.5	100.4
J1114	2.3	159.8	393.5	101.3
J1116	1.8	188	393.5	89
J1117	1.8	187.1	393.5	89.4

ID	Demand (gpm)	Elevation (ft)	Head (ft)	Pressure (psi)
J1118	1.8	186.5	393.5	89.7
J1119	1.8	184.4	393.5	90.6
J112	3.6	364.3	507.2	62
J1120	1.8	187.1	393.5	89.4
J1121	1.8	260	393.4	57.8
J1122	1.8	195.6	393.4	85.7
J1123	1.8	121.3	393.4	117.9
J1124	1.8	120.4	393.4	118.3
J1125	1.8	93	393.4	130.2
J1126	1.8	106.7	393.4	124.2
J1127	1.8	118.3	393.5	119.2
J1128	1.8	101.3	393.5	126.6
J1129	1.8	139.7	393.5	109.9
J113	3.6	355.7	507.2	65.7
J1130	1.8	89.4	393.5	131.7
J1131	1.8	140.4	393.5	109.6
J1132	1.8	140	393.5	109.8
J1133	1.8	142.9	393.5	108.6
J1134	1.8	162.2	393.5	100.2
J1135	1.8	160.7	393.5	100.9
J1136	1.8	170.7	393.5	96.5
J1137	1.8	161.4	393.5	100.6
J1138	1.8	156.9	393.5	102.5
J1139	1.8	134.4	393.5	112.2
J114	3.6	354.8	507.2	66
J1140	1.8	132.2	393.5	113.2
J1141	1.8	127.4	393.5	115.3
J1142	1.8	153.7	393.5	103.9
J1143	1.8	155.7	393.5	103
J1144	1.8	185.5	393.5	90.1
J1145	1.8	192.8	393.5	86.9
J1146	1.8	207.7	393.5	80.5
J1147	1.8	237.8	393.5	67.5
J1148	1.8	238.2	393.5	67.3
J1149	1.8	231.8	393.5	70.1
J115	3.6	350.4	507.1	67.9
J1150	1.8	239.1	393.5	66.9
J1151	1.8	257.4	393.5	59
J1152	1.8	279.1	393.5	49.5
J1153	1.8	273.7	393.5	51.9
J1154	1.8	223.1	393.5	73.8
J1155	1.8	211.8	393.5	78.7
J1156	1.8	206.5	393.5	81
J1157	1.8	200	393.5	83.8

ID	Demand (gpm)	Elevation (ft)	Head (ft)	Pressure (psi)
J1158	1.8	198.9	393.5	84.3
J1159	1.8	192.1	393.5	87.3
J116	3.6	348.7	507.1	68.6
J1160	1.8	195.8	393.5	85.6
J1161	1.8	188.2	393.5	88.9
J1162	1.8	190.9	393.5	87.8
J1163	1.8	168.7	393.5	97.4
J1164	1.8	166.2	393.5	98.5
J1165	1.8	168.5	393.5	97.5
J1166	1.8	169.9	393.5	96.8
J1167	1.8	164.3	393.5	99.3
J1168	1.8	150.3	393.5	105.4
J1169	1.8	151.7	393.5	104.7
J117	3.6	348.7	507.1	68.6
J1170	1.8	143.8	393.5	108.2
J1171	2.3	104.4	393.5	125.3
J1172	0	375.1	393.7	8
J1173	1.8	195.2	393.5	85.9
J1174	1.8	242.5	393.5	65.4
J1175	1.8	247.8	393.5	63.1
J1176	1.8	242.7	393.5	65.3
J1177	1.8	245.8	393.5	64
J1178	1.8	246.2	393.5	63.8
J1179	1.8	226.8	393.5	72.2
J118	3.6	346.2	507.1	69.7
J1180	1.8	234.8	393.5	68.7
J1181	1.8	271.7	393.7	52.8
J1182	1.8	271	393.7	53.2
J119	3.6	351.2	507.1	67.5
J1191	0	80.9	236.3	67.4
J1192	0	170	237.4	29.2
J1193	0	170	237.4	29.2
J1194	0	170	355.5	80.4
J1195	0	170	355.5	80.4
J12	3.6	403.7	509.4	45.8
J120	3.6	349.9	507.1	68.1
J121	3.6	346.4	507.1	69.6
J122	3.6	338.7	507	72.9
J123	3.6	342.5	506.9	71.2
J124	3.6	341.6	506.9	71.6
J125	3.6	343.3	506.9	70.9
J126	3.6	331.4	506.9	76
J127	3.6	328.5	506.9	77.3
J128	3.6	326.8	506.9	78

ID	Demand (gpm)	Elevation (ft)	Head (ft)	Pressure (psi)
J129	3.6	330.2	506.9	76.6
J13	3.6	401.4	509.4	46.8
J130	3.6	287.7	506.9	95
J131	3.6	352.9	507.1	66.8
J132	3.6	353.7	507.1	66.5
J133	3.6	347	507.1	69.4
J134	3.6	372.2	507.1	58.4
J135	3.6	356.6	507.1	65.2
J136	3.6	375.7	507.1	56.9
J137	3.6	349.9	507.1	68.1
J138	3.6	351.2	507.1	67.5
J139	3.6	368	507.1	60.3
J14	3.6	399.5	509.4	47.6
J140	3.6	366.6	507.1	60.9
J141	3.6	345.7	507.1	69.9
J142	3.6	355.8	507.1	65.5
J143	3.6	345.7	507.1	69.9
J144	3.6	339.4	507.1	72.6
J145	3.6	338.2	507.1	73.2
J146	3.6	337.3	507.6	73.8
J147	3.6	337.9	507.1	73.3
J148	3.6	345.8	507.1	69.9
J149	3.6	348.7	507.1	68.6
J15	3.6	384.7	509.4	54
J150	3.6	352	507.1	67.2
J151	3.6	329.3	507.1	77
J152	3.6	329.7	507.1	76.8
J153	3.6	321.7	507.1	80.3
J154	3.6	314.3	507.1	83.5
J155	3.6	311.5	507.2	84.8
J156	3.6	319.6	507.2	81.3
J157	3.6	302.3	507.2	88.8
J158	3.6	296.9	507.1	91.1
J159	3.6	302.9	507.2	88.5
J16	3.6	379.6	509.4	56.2
J160	3.6	301	507.2	89.3
J161	3.6	303.4	507.2	88.3
J162	3.6	311.7	507.3	84.7
J163	3.6	323.6	507.3	79.6
J164	3.6	306.2	507.3	87.1
J165	3.6	303.4	507.3	88.3
J166	3.6	300.2	507.3	89.7
J167	3.6	295.2	507.1	91.8
J168	3.6	296.5	507.1	91.3

ID	Demand (gpm)	Elevation (ft)	Head (ft)	Pressure (psi)
J169	3.6	292.3	507.1	93.1
J17	3.6	375.3	509.4	58.1
J170	3.6	294.4	507.1	92.1
J171	3.6	289.3	507	94.3
J172	3.6	306.8	507	86.7
J173	3.6	308.6	507	86
J174	3.6	303.3	507	88.3
J175	3.6	295.6	506.9	91.5
J176	3.6	287	506.9	95.3
J177	3.6	276.8	506.8	99.6
J178	3.6	276.7	506.8	99.7
J179	3.6	262	506.8	106
J18	3.6	387	509.4	53
J180	3.6	259.4	506.8	107.2
J181	3.6	241.6	506.7	114.9
J182	3.6	239.7	506.7	115.7
J183	3.6	234	506.7	118.2
J184	3.6	242.7	506.7	114.4
J185	3.6	218.6	506.7	124.8
J186	3.6	220.5	506.7	124
J187	3.6	194.1	506.7	135.5
J188	3.6	228.6	506.6	120.5
J189	3.6	222.1	506.7	123.3
J19	3.6	391.9	509.4	50.9
J190	3.6	226	506.6	121.6
J191	3.6	253.9	506.6	109.5
J192	3.6	257.8	506.6	107.8
J193	3.6	326.3	507.1	78.3
J194	3.6	335	507.1	74.6
J195	3.6	333	507.1	75.4
J196	3.6	237.3	506.6	116.7
J197	3.6	242	506.6	114.7
J198	3.6	260.7	506.6	106.6
J199	3.6	270.5	506.6	102.3
J2	3.6	365.1	508.7	62.2
J20	3.6	391.4	509.4	51.2
J200	3.6	274.2	506.6	100.7
J2000	0	220.7	237.6	7.3
J2001	0	208.7	238.7	13
J2002	0	205.1	240.2	15.2
J2004	8.5	175.7	337	69.9
J2005	8.5	171.7	337	71.6
J2006	8.5	176.5	337	69.5
J2007	8.5	178.5	337	68.7

ID	Demand (gpm)	Elevation (ft)	Head (ft)	Pressure (psi)
J2008	8.5	193.1	337	62.4
J2009	8.5	189.4	337	64
J201	3.6	273.1	506.6	101.2
J2010	3	145.8	238.6	40.2
J2011	3	143.4	238.5	41.2
J2012	3	142.5	238.5	41.6
J2013	3	145.8	238.5	40.1
J2014	3	150.9	238.5	37.9
J2015	3	152.5	238.5	37.2
J2016	3	165.9	238.5	31.4
J2017	3	169.5	238.5	29.9
J2018	3	130.3	238	46.7
J2019	3	95.8	236.8	61.1
J202	3.6	221.3	506.7	123.6
J2020	3	93.2	236.7	62.2
J2021	3	99.1	236.6	59.6
J2022	3	117.3	236.4	51.6
J2023	3	134.7	236.3	44
J2024	3	122.3	236.3	49.4
J2025	3	106.2	236.3	56.4
J2026	3	96.2	236.3	60.7
J2027	3	84.9	236.3	65.6
J2028	3	87.2	236.3	64.6
J2029	3	77.3	236.3	68.9
J203	3.6	292	506.6	93
J2030	3	87.2	236.3	64.6
J2031	3	68.4	236.3	72.7
J2032	3	69.5	236.3	72.3
J2033	3	80.3	236.3	67.6
J2034	3	81.7	236.3	67
J2035	3	87.1	236.3	64.7
J2036	3	75.9	236.3	69.5
J2037	3	65.3	236.3	74.1
J2038	3	58.3	236.3	77.1
J2039	3	58	236.3	77.2
J204	3.6	291.9	506.6	93.1
J2040	3	58.1	236.3	77.2
J2041	3	58.2	236.3	77.2
J2042	3	58.6	236.3	77
J2043	3	58.1	236.3	77.2
J2044	3	75	236.3	69.9
J2045	3	75.1	236.3	69.8
J2046	3	58.1	236.3	77.2
J2047	3	44.2	236.3	83.2

ID	Demand (gpm)	Elevation (ft)	Head (ft)	Pressure (psi)
J2048	3	20.1	236.3	93.7
J2049	3	16.1	236.3	95.4
J205	3.6	285.9	506.6	95.6
J2050	3	28.5	236.3	90
J2051	3	42.2	236.3	84.1
J2052	3	41.2	236.3	84.5
J2053	3	19.6	236.3	93.9
J2054	3	18.7	236.3	94.3
J2055	3	43.5	236.3	83.5
J2056	3	42.7	236.3	83.9
J2057	3	42.2	236.3	84.1
J2058	3	44	236.3	83.3
J2059	3	43.9	236.3	83.4
J206	3.6	293.7	506.6	92.3
J2060	3	48	236.3	81.6
J2061	3	52.1	236.3	79.8
J2062	3	53	236.3	79.4
J2063	3	54.3	236.3	78.8
J2064	3	55.7	236.3	78.2
J2065	3	55.2	236.3	78.5
J2066	3	56.4	236.3	77.9
J2067	3	82.4	236.3	66.7
J2068	3	93.6	236.3	61.8
J2069	3	41.6	236.3	84.3
J207	3.6	331.9	506.7	75.7
J2070	3	38.5	236.3	85.7
J2071	3	28.9	236.3	89.9
J2072	3	44.8	236.3	83
J2073	3	44.7	236.3	83
J2074	3	45.8	236.3	82.5
J2075	3	66	236.3	73.8
J2076	3	32.8	236.3	88.1
J2077	3	24.1	236.3	91.9
J2078	3	61.7	236.3	75.7
J2079	3	62.4	236.3	75.4
J208	3.6	321.7	506.7	80.2
J2080	3	67	236.3	73.4
J2081	3	68.9	236.4	72.5
J2082	3	69	236.4	72.5
J2083	3	68.2	236.4	72.9
J2084	3	69.2	236.3	72.4
J2085	3	77.4	236.3	68.9
J2086	3	79.6	236.4	67.9
J2087	3	86.2	236.3	65.1

ID	Demand (gpm)	Elevation (ft)	Head (ft)	Pressure (psi)
J2088	3	87.9	236.3	64.3
J2089	3	84.1	236.3	66
J209	3.6	324.1	506.7	79.1
J2090	3	81.7	236.3	67
J2091	3	128.9	236.3	46.6
J2092	3	59	236.3	76.8
J2093	3	59.4	236.3	76.6
J2094	3	57.9	236.3	77.3
J2095	3	58.7	236.3	76.9
J2096	3	43.1	236.3	83.7
J2097	3	41.6	236.3	84.4
J2098	3	33.6	236.3	87.8
J2099	3	43.2	236.3	83.7
J21	3.6	380.9	509.4	55.7
J210	3.6	323.8	506.7	79.2
J2100	3	24.9	236.3	91.6
J2101	3	24.1	236.3	91.9
J2102	3	29.3	236.3	89.7
J2103	3	26.8	236.3	90.8
J2104	3	27.9	236.3	90.3
J2105	3	34.8	236.3	87.3
J2106	3	41.7	236.3	84.3
J2107	3	45.8	236.3	82.5
J2108	3	72.3	236.3	71.1
J2109	3	93.4	236.3	61.9
J211	3.6	318.7	506.7	81.5
J2110	3	90.3	236.3	63.3
J2111	3	98.8	236.4	59.6
J2112	3	98.4	236.4	59.8
J2113	3	114	236.3	53
J2114	3	120	236.3	50.4
J2115	3	130	236.3	46.1
J2116	3	132	236.3	45.2
J2117	3	135	236.3	43.9
J2118	3	133	236.3	44.8
J2119	3	135	236.3	43.9
J212	3.6	310.4	506.7	85.1
J2120	3	122	236.3	49.5
J2121	3	128	236.3	46.9
J2122	3	120	236.3	50.4
J2123	3	108.6	236.3	55.3
J2124	3	123.2	236.3	49
J2125	3	110.5	236.3	54.5
J2126	3	109.2	236.3	55.1

ID	Demand (gpm)	Elevation (ft)	Head (ft)	Pressure (psi)
J2127	3	67.4	236.3	73.2
J2128	3	62.8	236.3	75.2
J2129	3	26.5	236.3	90.9
J213	3.6	293.2	506.8	92.5
J2130	3	27.6	236.3	90.4
J2131	3	30.7	236.3	89.1
J2132	3	30.2	236.3	89.3
J2133	3	41.6	236.3	84.4
J2134	3	34.7	236.3	87.4
J2135	3	34	236.3	87.6
J2137	3	34.2	236.3	87.6
J2138	3	38.4	236.3	85.8
J2139	3	38.2	236.3	85.8
J214	3.6	375.9	506.6	56.6
J2140	3	41.8	236.4	84.3
J2141	3	98.9	236.4	59.6
J2142	3	98.9	236.5	59.7
J2143	3	112.9	236.5	53.6
J2144	3	97.9	236.6	60.1
J2145	3	97.5	236.6	60.3
J2146	3	95.9	236.8	61.1
J2147	3	104.9	236.8	57.1
J2148	3	100.2	237	59.3
J2149	3	124.6	237.2	48.8
J215	3.6	379.6	506.6	55
J2150	3	130.2	237.2	46.4
J2151	3	136.5	237.2	43.6
J2152	3	113.9	237.2	53.4
J2153	3	47.5	236.4	81.8
J2154	3	46.9	236.4	82.1
J2155	3	47.6	236.3	81.8
J2156	3	52.5	236.3	79.7
J2157	3	49.8	236.3	80.8
J2158	3	65.1	236.3	74.2
J2159	3	66.2	236.3	73.7
J216	3.6	392.6	506.6	49.4
J2160	3	96.5	236.3	60.6
J2161	3	93.6	236.3	61.8
J2162	3	95.6	236.3	61
J2163	3	53.1	236.3	79.4
J2164	3	32.7	236.3	88.2
J2165	3	46.7	236.3	82.2
J2166	3	84.7	236.3	65.7
J2167	0	194	237.3	18.8

ID	Demand (gpm)	Elevation (ft)	Head (ft)	Pressure (psi)
J2168	3	178	237.3	25.7
J2169	3	183.4	237.3	23.4
J217	3.6	392.5	506.6	49.5
J2170	0	203	237.5	15
J2171	0	209.2	239.2	13
J2172	0	209.1	239.1	13
J2173	0	159.4	238	34
J2174	3	138.7	237.3	42.7
J2175	3	135.6	237.3	44.1
J2176	3	139.9	237	42.1
J2177	3	143.8	236.8	40.3
J2178	3	142.6	236.6	40.7
J2179	3	146.1	236.6	39.2
J218	3.6	392.3	506.6	49.5
J2180	3	156.3	236.3	34.7
J2181	3	108.8	236.3	55.2
J2182	3	107.8	236.3	55.7
J2183	3	92.1	236.2	62.4
J2184	3	90.2	236.2	63.3
J2185	3	86.5	236.2	64.9
J2186	3	104.1	236.3	57.3
J2187	3	94.8	236.2	61.2
J2188	3	90.3	236.2	63.2
J2189	3	79.1	236.1	68.1
J219	3.6	394.7	506.6	48.5
J2190	3	37.2	236.1	86.2
J2191	3	26.7	236.1	90.7
J2192	3	39.1	236.1	85.4
J2193	3	30.4	236.1	89.1
J2194	3	23.7	236.1	92
J2195	3	17.8	236.1	94.6
J2196	3	17.2	236.1	94.8
J2197	3	21.9	236.1	92.8
J2198	3	19.8	236.1	93.7
J2199	3	34.1	236.1	87.5
J22	3.6	374.3	509.4	58.6
J220	3.6	383.7	506.6	53.3
J2200	3	70.9	236.1	71.6
J2201	3	73.7	236.1	70.3
J2202	3	17.8	236.1	94.6
J2203	3	20.1	236.1	93.6
J2204	3	19.6	236.1	93.8
J2205	3	20.1	236.1	93.6
J2206	3	15.3	236.1	95.7

ID	Demand (gpm)	Elevation (ft)	Head (ft)	Pressure (psi)
J2207	3	18.8	236.1	94.2
J2208	3	35.2	236.1	87.1
J2209	3	39.1	236.1	85.4
J221	3.6	383.6	506.6	53.3
J2210	3	13.1	236.2	96.7
J2211	3	12.7	236.2	96.8
J2212	3	15.4	236.2	95.7
J2213	3	17.9	236.2	94.6
J2214	3	18.9	236.2	94.1
J2215	3	23.4	236.2	92.2
J2216	3	45.2	236.2	82.8
J2217	3	35.4	236.2	87
J2218	3	36.3	236.2	86.6
J2219	3	61.5	236.2	75.7
J222	3.6	372.3	506.6	58.2
J2220	3	80.2	236.2	67.6
J2221	3	58.9	236.2	76.8
J2222	3	60.2	236.2	76.3
J2223	3	71.6	236.2	71.3
J2224	3	75	236.2	69.8
J2225	3	67.9	236.2	72.9
J2226	3	67.2	236.2	73.2
J2228	3	32.7	236.2	88.2
J2229	3	41.9	236.2	84.2
J223	3.6	380.4	506.6	54.7
J2230	3	55.6	236.2	78.3
J2231	3	55.9	236.2	78.1
J2232	3	68.5	236.2	72.7
J2233	3	68.1	236.2	72.9
J2234	3	48	236.2	81.6
J2235	3	47.1	236.2	81.9
J2236	3	46.8	236.3	82.1
J2237	3	72.5	236.2	71
J2238	3	74	236.2	70.3
J2239	3	86.4	236.2	64.9
J224	3.6	374.3	506.6	57.3
J2240	3	91.1	236.2	62.9
J2241	3	114.7	236.3	52.7
J2242	3	118.6	236.3	51
J2243	3	120.9	236.3	50
J2244	3	126.5	236.3	47.6
J2245	3	54.3	236.3	78.9
J2246	3	89.4	236.3	63.7
J2247	3	92.5	236.3	62.3

ID	Demand (gpm)	Elevation (ft)	Head (ft)	Pressure (psi)
J2248	3	55.2	236.3	78.5
J2249	3	56	236.3	78.1
J225	3.6	379.7	506.6	55
J2250	3	65.5	236.3	74
J2251	3	103.2	236.3	57.7
J2252	3	105.2	236.3	56.8
J2253	3	108	236.3	55.6
J2254	3	108.5	236.4	55.4
J2255	3	115.4	236.4	52.4
J2256	3	128.4	236.4	46.8
J2257	3	117.7	236.4	51.5
J2258	3	118.4	236.5	51.1
J2259	3	124.8	236.6	48.4
J226	3.6	376.1	506.6	56.6
J2260	3	112.9	236.4	53.5
J2261	3	108.7	236.3	55.3
J2262	3	108.9	236.3	55.2
J2263	3	100.5	236.3	58.9
J2264	3	110	236.3	54.7
J2265	3	137.1	237.3	43.4
J2266	3	131.8	236.7	45.5
J2267	3	41.2	236.3	84.5
J2268	3	43.5	236.3	83.5
J2269	3	19.7	236.3	93.8
J227	3.6	373.2	506.6	57.8
J2270	3	19.5	236.3	93.9
J2271	3	13.7	236.3	96.4
J2272	3	19	236.3	94.1
J2273	3	14.3	236.3	96.2
J2274	3	12.8	236.3	96.8
J2275	3	18.9	236.3	94.2
J2276	3	19.7	236.3	93.8
J2277	3	20.1	236.3	93.7
J2278	3	19.8	236.3	93.8
J2279	3	33.5	236.3	87.9
J228	3.6	360.1	506.6	63.5
J2280	3	41.6	236.3	84.4
J2281	3	59.8	236.3	76.5
J2282	3	70.5	236.3	71.8
J2285	3	81.4	236.3	67.1
J2286	3	22.1	236.3	92.8
J2287	3	48.3	236.3	81.5
J2288	3	55.5	236.3	78.3
J2289	3	93.9	236.3	61.7

ID	Demand (gpm)	Elevation (ft)	Head (ft)	Pressure (psi)
J229	3.6	342.3	506.6	71.2
J2290	3	93.7	236.3	61.8
J2291	3	94	236.3	61.6
J2292	3	111.4	236.3	54.1
J2293	3	114.2	236.3	52.9
J2294	3	120	236.3	50.4
J2295	3	113.5	236.3	53.2
J2296	3	100.5	236.4	58.9
J2297	3	107.9	236.4	55.7
J2298	3	104.5	236.4	57.1
J2299	3	99.5	236.4	59.3
J23	3.6	404.2	509.5	45.6
J230	3.6	359	506.6	64
J2300	3	99.4	236.4	59.4
J2301	3	102.9	236.4	57.8
J2302	3	122.7	236.4	49.2
J2303	3	129.5	236.4	46.3
J2304	3	99.7	236.4	59.2
J2305	3	49.7	236.3	80.9
J2306	3	50.9	236.3	80.3
J2307	3	53.9	236.3	79.1
J2308	3	53	236.3	79.4
J2309	2.5	61.9	236.3	75.6
J231	3.6	360.5	506.6	63.3
J2310	3	56.6	236.4	77.9
J2311	3	55	236.4	78.6
J2312	3	56.1	236.4	78.1
J2313	3	51.5	236.4	80.1
J2314	3	55.4	236.4	78.4
J2315	3	63.7	236.4	74.8
J2316	3	68.9	236.4	72.6
J2317	3	55.6	236.4	78.3
J2318	3	68.8	236.4	72.6
J2319	3	65.7	236.4	74
J232	3.6	355.9	506.6	65.3
J2320	3	64.3	236.4	74.6
J2321	3	66.9	236.4	73.4
J2322	3	68	236.4	73
J2323	3	72.7	236.4	70.9
J2324	3	75.4	236.4	69.8
J2325	3	61	236.4	76
J2326	3	55.5	236.4	78.4
J2327	3	55.5	236.4	78.4
J2328	3	54.8	236.4	78.7

ID	Demand (gpm)	Elevation (ft)	Head (ft)	Pressure (psi)
J2329	3	53.3	236.4	79.3
J233	3.6	354.1	506.6	66.1
J2330	3	84.1	236.4	66
J2331	3	67.1	236.4	73.4
J2332	3	64.2	236.4	74.6
J2333	3	93.2	236.4	62
J2334	3	88.3	236.4	64.2
J2335	3	78.7	236.4	68.3
J2336	3	75.8	236.4	69.6
J2337	3	64.2	236.4	74.6
J2338	3	61.2	236.4	75.9
J2339	3	59.5	236.4	76.6
J234	3.6	304	506.7	87.8
J2340	3	61	236.4	76
J2341	3	60.7	236.4	76.1
J2342	3	58.3	236.4	77.2
J2343	3	57	236.4	77.7
J2344	3	57.7	236.4	77.4
J2345	3	59.6	236.4	76.6
J2346	3	63.4	236.4	75
J2347	3	133.9	236.4	44.4
J2348	3	108.6	236.4	55.4
J2349	3	58.7	236.4	77
J235	3.6	290.7	507.1	93.8
J2350	3	57.3	236.4	77.6
J2351	3	57.7	236.4	77.4
J2352	3	64.8	236.4	74.3
J2353	3	63.2	236.4	75
J2354	3	63.6	236.4	74.8
J2355	3	65.2	236.4	74.2
J2356	3	59.4	236.4	76.7
J2357	3	60	236.4	76.4
J2358	3	66.7	236.4	73.5
J2359	3	69	236.4	72.5
J236	3.6	313.2	506.7	83.8
J2360	3	83.5	236.4	66.2
J2361	3	70	236.4	72.1
J2362	3	62.5	236.6	75.4
J2363	3	61.6	236.6	75.8
J2364	3	66.5	236.6	73.7
J2365	3	58.4	236.5	77.2
J2366	3	62	236.6	75.6
J2367	3	61.6	236.6	75.8
J2368	3	60.8	236.6	76.2

ID	Demand (gpm)	Elevation (ft)	Head (ft)	Pressure (psi)
J2369	3	61.3	236.6	76
J237	3.6	307.4	506.7	86.4
J2370	3	58.8	236.6	77
J2371	3	58.1	236.5	77.3
J2372	3	57.4	236.5	77.6
J2373	3	56.4	236.4	78
J2374	3	100.7	236.4	58.8
J2375	3	93.1	236.3	62.1
J2376	3	77.2	236.3	68.9
J2377	3	58.5	236.3	77
J2378	3	48.3	236.3	81.5
J2379	3	72.7	236.3	70.9
J238	3.6	294.3	506.8	92.1
J2380	3	58.1	236.3	77.2
J2381	3	47.6	236.3	81.8
J2382	3	49.1	236.3	81.1
J2383	3	63.6	236.3	74.8
J2384	3	72.5	236.3	71
J2385	3	93.7	236.3	61.8
J2386	3	98.3	236.3	59.8
J2387	3	116.5	236.3	51.9
J2388	3	106.2	236.3	56.4
J2389	3	90.6	236.3	63.2
J2390	3	79.9	236.3	67.8
J2391	3	92.6	236.4	62.3
J2392	3	90.5	236.4	63.2
J2393	3	161.6	236.7	32.5
J2394	3	152.5	236.6	36.4
J2395	0	188.8	237.1	20.9
J2396	3	187.3	355.5	72.9
J2397	3	184.6	355.5	74
J2398	0	197.1	237.4	17.5
J2399	0	189.2	237.4	20.9
J24	3.6	402.2	509.5	46.5
J2400	0	170.9	237.4	28.8
J2401	0	171.6	355.5	79.7
J2402	3	164.9	355.5	82.6
J2403	3	156.8	355.5	86.1
J2404	3	140.2	355.5	93.3
J2405	3	194.9	355.5	69.6
J2406	3	76	236.3	69.5
J2407	3	70.3	236.3	71.9
J2408	3	66.6	236.3	73.5
J2409	3	75.7	236.3	69.6

ID	Demand (gpm)	Elevation (ft)	Head (ft)	Pressure (psi)
J2410	3	99.9	236.3	59.1
J2411	3	101.9	236.3	58.2
J2412	3	117.3	236.3	51.5
J2413	3	133.1	236.3	44.7
J2414	3	101.6	236.3	58.3
J2415	3	100.6	236.3	58.8
J2416	3	100.9	236.3	58.7
J2417	3	100.8	236.3	58.7
J2418	3	100.7	236.3	58.8
J2419	3	97.6	236.3	60.1
J2420	3	100.2	236.3	59
J2421	3	100.1	236.3	59
J2422	3	104	236.3	57.3
J2423	3	110.1	236.3	54.7
J2424	3	89.7	236.3	63.5
J2425	3	84.6	236.3	65.7
J2426	3	110.6	236.3	54.5
J2427	3	92.2	236.3	62.5
J2428	3	88.9	236.3	63.9
J2429	3	43.2	236.3	83.7
J2430	3	96.6	236.3	60.5
J2431	3	106.2	236.3	56.4
J2432	3	105.7	236.3	56.6
J2433	3	104.7	236.3	57
J2434	3	73.2	236.3	70.7
J2435	3	78	236.3	68.6
J25	3.6	405.9	509.5	44.9
J2500	0	140	236.3	41.7
J2502	0	225	343.5	51.3
J2503	0	208	344.7	59.2
J2504	0	39	236.2	85.4
J2505	0	36	236.2	86.7
J2506	0	89.7	236.3	63.5
J2507	4.6	45.7	236.2	82.5
J2508	4.6	34	236.2	87.6
J2509	0	360	508.7	64.4
J2510	0	370.8	508.7	59.8
J2511	0	325.9	508.7	79.2
J2512	0	365	508.7	62.3
J2513	3.5	320	507.4	81.2
J2514	3.5	355	507.4	66
J2515	3.5	355	507.4	66
J2516	3.5	330	507.4	76.9
J2517	3.5	335	507.4	74.7

ID	Demand (gpm)	Elevation (ft)	Head (ft)	Pressure (psi)
J2518	0	148	393.5	106.4
J2520	0	100	236.4	59.1
J2521	0	90	236.3	63.4
J2522	0	150	236.3	37.4
J2523	0	175	236.3	26.5
J2524	0	70	236.3	72
J2525	0	208	239.1	13.5
J2526	2.9	210	345.5	58.7
J2527	2.9	175	347.1	74.6
J2528	2.9	200	346.4	63.4
J2529	2.9	225	346.8	52.8
J2530	0	110	349.5	103.8
J2531	2.9	160	347.7	81.3
J2532	0	110	472.8	157.2
J2533	0	230	474.7	106
J2534	2.9	210	474.7	114.7
J2535	2.9	198	474.7	119.9
J2536	2.9	230	474.7	106
J2537	2.9	250	474.7	97.4
J2538	2.9	260	474.7	93
J2539	2.9	240	474.7	101.7
J2540	0	328	508.7	78.3
J2541	0	210	337	55
J2542	0	322	393.8	31.1
J2543	0	252	540	124.8
J2544	0	256	540	123.1
J2545	0	120	393.5	118.5
J2546	0	120	393.5	118.5
J2547	0	103	236.4	57.8
J26	0	404.7	509.6	45.5
J27	0	407.5	509.7	44.3
J28	0	406.8	509.7	44.6
J29	0	407.3	509.7	44.4
J3	3.6	325.9	508.7	79.2
J30	0	404.1	509.7	45.8
J3000	0	376	480.5	45.3
J3001	8.5	372	478.2	46
J3002	8.5	371	477.9	46.3
J3003	8.5	347.1	477	56.3
J3004	8.5	321.8	476.5	67
J3005	8.5	316.9	476.4	69.1
J3006	8.5	300.7	476.2	76.1
J3007	8.5	297.1	476.2	77.6
J3008	8.5	300.4	475.8	76

ID	Demand (gpm)	Elevation (ft)	Head (ft)	Pressure (psi)
J3009	8.5	285.6	475.6	82.4
J3010	8.5	279.6	475.2	84.8
J3011	8.5	335.9	476.9	61.1
J3012	8.5	325.7	476.4	65.3
J3013	8.5	332.7	476	62.1
J3014	8.5	333.1	475.7	61.8
J3015	8.5	339.2	475.6	59.1
J3016	8.5	352.2	475.3	53.3
J3017	8.5	357.2	475.2	51.1
J3018	8.5	364.2	475.3	48.1
J3019	8.5	361	475.3	49.5
J3020	8.5	364	475.3	48.2
J3021	8.5	366	475.3	47.3
J3022	8.5	368	475.3	46.5
J3023	8.5	362	475.3	49.1
J3024	8.5	345.9	475.3	56.1
J3025	8.5	352.5	475.3	53.2
J3026	8.5	362.1	474.7	48.8
J3027	8.5	348.3	473.9	54.4
J3028	8.5	316	473.4	68.2
J3029	8.5	312	473.2	69.8
J3030	8.5	304.9	473.1	72.9
J3031	8.5	307	473.1	72
J3032	8.5	318.3	475.7	68.2
J3033	8.5	320	475.7	67.5
J3034	8.5	298.2	475.7	76.9
J3035	8.5	283.4	475.7	83.3
J3036	8.5	277.4	475.8	85.9
J3037	8.5	279.6	475.8	85
J3038	8.5	275	475.8	87
J3039	8.5	280.9	475.8	84.4
J3040	8.5	295.4	475.8	78.2
J3041	8.5	294.7	472.7	77.2
J3042	8.5	281.3	472.4	82.8
J3043	8.5	282.8	472.5	82.2
J3044	8.5	294.5	471.8	76.8
J3045	8.5	295.9	471.8	76.2
J3046	8.5	294	471.5	76.9
J3047	8.5	283.4	471.2	81.4
J3048	8.5	248.5	470.6	96.3
J3049	8.5	336.8	475.7	60.2
J3050	8.5	290.1	472.1	78.9
J3052	8.5	285.8	475.6	82.2
J3053	8.5	282.4	475.6	83.7

ID	Demand (gpm)	Elevation (ft)	Head (ft)	Pressure (psi)
J3054	0	306.5	475.6	73.3
J3055	0	288.2	475.6	81.2
J3056	13.6	86.9	472.8	167.2
J3057	8.5	111.7	472.8	156.5
J3058	8.5	157.2	473.3	137
J3059	8.5	167.8	473.5	132.5
J3060	8.5	222.9	474.7	109.1
J3061	8.5	305.3	475.6	73.8
J3062	0	307.8	475.6	72.7
J31	0	407.5	509.8	44.3
J32	0	406.5	509.9	44.8
J33	0	403.4	509.7	46
J34	3.6	404.2	509.5	45.6
J35	3.6	393.8	508.3	49.6
J36	3.6	392.1	508.3	50.3
J37	3.6	393.6	508.3	49.7
J38	3.6	388.5	508.3	51.9
J39	3.6	381.9	507.9	54.6
J4	3.6	370.8	508.7	59.7
J40	3.6	388.8	507.6	51.5
J41	3.6	383.2	507.6	53.9
J42	3.6	391.9	507.5	50.1
J43	3.6	392.4	507.5	49.9
J44	3.6	393.2	507.5	49.5
J45	3.6	391.6	507.4	50.2
J46	3.6	390.8	507.5	50.5
J47	3.6	375.8	507.4	57
J48	3.6	368.2	507.4	60.3
J49	3.6	360.9	507.4	63.5
J5	3.6	399.6	508.7	47.3
J50	3.6	361	507.4	63.4
J51	3.6	359.1	507.4	64.3
J52	3.6	370.7	507.4	59.2
J53	3.6	323.5	507.4	79.7
J54	3.6	313.1	507.4	84.2
J55	3.6	381.2	507.8	54.8
J56	3.6	380.1	507.7	55.3
J57	3.6	370	507.7	59.7
J58	3.6	371	507.7	59.2
J59	3.6	367	507.7	60.9
J6	3.6	400	508.7	47.1
J60	3.6	370	507.7	59.7
J61	3.6	371.9	507.7	58.8
J62	3.6	373.7	507.7	58

ID	Demand (gpm)	Elevation (ft)	Head (ft)	Pressure (psi)
J63	3.6	382.4	507.7	54.3
J64	3.6	372.6	507.7	58.5
J65	3.6	359.9	507.3	63.8
J66	3.6	387.6	507.3	51.9
J67	3.6	384.5	507.2	53.2
J68	3.6	384.9	507.2	53
J69	3.6	380.7	507.2	54.8
J7	3.6	400.1	508.7	47.1
J70	3.6	377.1	507.2	56.4
J71	3.6	375.7	507.2	57
J72	3.6	375	507.2	57.3
J73	3.6	375.5	507.2	57.1
J74	3.6	376.6	507.2	56.6
J75	3.6	380.2	507.2	55
J76	3.6	373.8	507.1	57.8
J77	3.6	375.6	507.1	57
J78	3.6	371.6	507.1	58.7
J79	3.6	367.4	507.1	60.6
J8	3.6	400.8	508.7	46.8
J80	3.6	368.6	507.1	60
J81	3.6	369.9	507.1	59.4
J82	3.6	366.4	507.1	61
J83	3.6	364.8	507.1	61.6
J84	3.6	354.7	507.1	66
J85	3.6	363.7	507.1	62.1
J86	3.6	365.9	507.1	61.2
J87	3.6	351.5	507.1	67.4
J88	3.6	358	507.1	64.6
J89	3.6	356.1	507.1	65.4
J9	3.6	401	508.7	46.7
J90	3.6	363.9	507.1	62
J91	3.6	363.7	507.1	62.1
J92	3.6	353.5	507.1	66.6
J93	3.6	360.3	507.1	63.6
J94	3.6	349.5	507.1	68.3
J95	3.6	354.2	507.1	66.2
J96	3.6	351.6	507.1	67.4
J97	3.6	350.9	507.1	67.7
J98	3.6	347.7	507.1	69.1
J99	3.6	346	507.1	69.8

2034 Peak Hour Demand Scenario
Existing System- No Improvments

ID	Demand (gpm)	Elevation (ft)	Head (ft)	Pressure (psi)
J1	0.7	372.8	507.6	58.4
J10	4.4	400.2	507.3	46.4
J100	4.4	332.2	505.1	74.9
J1000	0	381.2	392.6	4.9
J1001	0	360.4	392.3	13.8
J1002	0.7	277.6	391.6	49.4
J1003	2	267	391.6	54
J1004	2	262.4	391.5	56
J1005	2	263.5	391.5	55.5
J1006	2	265.1	391.4	54.7
J1007	2	272.7	391.4	51.4
J1008	2	272.3	391.4	51.6
J1009	2	271.7	391.4	51.9
J101	4.4	323.5	505.1	78.7
J1010	2	277.9	391.4	49.2
J1011	2	288.5	391.4	44.6
J1012	2	272.5	391.1	51.4
J1013	2	274.7	391	50.4
J1014	2	265.5	391	54.4
J1015	2	278.4	390.8	48.7
J1016	2	279.7	390.8	48.2
J1017	0	315.2	390.8	32.8
J1018	0	321.1	390.8	30.2
J1019	2	284.4	390.7	46
J102	4.4	335.1	505.1	73.7
J1020	2	286	390.6	45.3
J1021	2	298.3	390.6	40
J1022	2	300.5	390.6	39
J1023	2	305.8	390.6	36.7
J1024	2	309.3	390.6	35.2
J1025	2	311.4	390.6	34.3
J1026	2	301.8	390.6	38.5
J1027	2	302.7	390.6	38.1
J1028	0	371.3	390.6	8.4
J1029	0	380.9	390.6	4.2
J103	4.4	335.2	505.1	73.6
J1030	0	371.2	390.6	8.4
J1031	0	373.3	390.6	7.5
J1032	2	304.3	391.5	37.8
J1033	2	301	390.6	38.8
J1034	2	292.7	390.6	42.4
J1035	2	294.4	390.6	41.7
J1036	2	296.8	390.6	40.6
J1037	2	296.8	390.6	40.6

ID	Demand (gpm)	Elevation (ft)	Head (ft)	Pressure (psi)
J1038	2	295.5	390.6	41.2
J1039	2	295.7	390.6	41.1
J104	4.4	332.5	505.1	74.8
J1040	2	297.2	390.6	40.5
J1041	2	302.8	390.6	38
J1042	2	301.6	390.6	38.6
J1043	2	303.2	390.6	37.9
J1044	2	303.5	390.6	37.7
J1045	2	307.6	390.6	36
J1046	2	305.1	390.6	37.1
J1047	2	313.5	390.6	33.4
J1048	2	309.9	390.6	34.9
J1049	2	311.3	390.6	34.4
J105	4.4	317.7	505.1	81.2
J1050	2	308.1	390.6	35.7
J1051	2	293	390.6	42.3
J1052	2	298.1	390.6	40.1
J1053	2	302.1	390.6	38.3
J1054	2	297.4	390.6	40.4
J1055	2	297.7	390.6	40.3
J1056	2	277.5	390.6	49
J1057	2	291.3	390.6	43
J1058	2	278.1	390.6	48.7
J1059	2	226.7	390.6	71
J106	4.4	399.8	507.2	46.5
J1060	2	140.1	390.6	108.5
J1061	2	269.4	390.6	52.5
J1062	2	267.7	390.6	53.3
J1063	2	282.9	390.6	46.6
J1064	2	265.9	390.6	54
J1065	2	263.4	390.6	55.1
J1066	2	264.8	390.6	54.5
J1067	2	262.3	390.6	55.6
J1068	2	272.6	390.6	51.1
J1069	2	260.8	390.6	56.2
J107	4.4	365.6	505.4	60.6
J1070	2	261.1	390.6	56.1
J1071	2	285.2	390.6	45.7
J1072	2	266	390.6	54
J1073	2	235.4	391.4	67.6
J1074	2	232.5	391.4	68.9
J1075	2	264.4	391.4	55
J1076	2	254.8	391.4	59.2
J1077	2	264.5	391.4	55

ID	Demand (gpm)	Elevation (ft)	Head (ft)	Pressure (psi)
J1078	2	266.5	391.4	54.1
J1079	2	259.4	391.4	57.2
J108	4.4	382.9	505.3	53
J1080	2	239.6	391.4	65.8
J1081	2	248.9	391.4	61.8
J1082	2	251.1	391.4	60.8
J1083	2	251.5	391.4	60.6
J1084	2	273.9	391.4	50.9
J1085	2	275.4	391.4	50.3
J1086	2	305	391.4	37.4
J1087	2	259.8	391.5	57
J1088	2	270.9	391.5	52.3
J1089	0.7	297	391.5	41
J109	4.4	373.5	505.2	57.1
J1090	2	195.6	391.4	84.9
J1091	2	196.3	391.4	84.5
J1092	2	193.1	391.4	85.9
J1093	2	183.9	391.4	89.9
J1094	2	182.3	391.4	90.6
J1095	2	224.9	391.4	72.1
J1096	2	224.9	391.4	72.2
J1097	2	220	391.4	74.3
J1098	2	190.2	391.4	87.2
J1099	2	206.1	391.4	80.3
J11	4.4	403.1	508.6	45.7
J110	4.4	336.6	505.9	73.4
J1100	2	208.5	391.4	79.2
J1101	2	165	391.3	98.1
J1102	2	171.3	391.3	95.4
J1103	2	174.8	391.3	93.8
J1104	2	181	391.3	91.1
J1105	2	180.9	391.3	91.2
J1106	2	161.8	391.4	99.5
J1107	2	164.3	391.4	98.4
J1108	2	152.5	391.4	103.5
J1109	2	161.6	391.4	99.6
J111	4.4	379.7	505.4	54.5
J1110	2	160.7	391.4	100
J1111	2	170	391.4	95.9
J1112	2	159.1	391.4	100.6
J1113	2	161.9	391.4	99.5
J1114	2.8	159.8	391.4	100.4
J1116	2	188	391.4	88.1
J1117	2	187.1	391.4	88.5

ID	Demand (gpm)	Elevation (ft)	Head (ft)	Pressure (psi)
J1118	2	186.5	391.3	88.8
J1119	2	184.4	391.3	89.7
J112	4.4	364.3	505.4	61.1
J1120	2	187.1	391.3	88.5
J1121	2	260	391.3	56.9
J1122	2	195.6	391.3	84.8
J1123	2	121.3	391.3	117
J1124	2	120.4	391.3	117.4
J1125	2	93	391.3	129.3
J1126	2	106.7	391.3	123.3
J1127	2	118.3	391.3	118.3
J1128	2	101.3	391.3	125.7
J1129	2	139.7	391.3	109
J113	4.4	355.7	505.4	64.8
J1130	2	89.4	391.3	130.8
J1131	2	140.4	391.3	108.7
J1132	2	140	391.3	108.9
J1133	2	142.9	391.3	107.7
J1134	2	162.2	391.3	99.3
J1135	2	160.7	391.3	99.9
J1136	2	170.7	391.3	95.6
J1137	2	161.4	390.7	99.4
J1138	2	156.9	390.6	101.3
J1139	2	134.4	390.5	111
J114	4.4	354.8	505.3	65.2
J1140	2	132.2	390.5	111.9
J1141	2	127.4	390.6	114
J1142	2	153.7	390.5	102.6
J1143	2	155.7	390.5	101.8
J1144	2	185.5	390.5	88.9
J1145	2	192.8	390.5	85.7
J1146	2	207.7	390.5	79.2
J1147	2	237.8	390.5	66.2
J1148	2	238.2	390.5	66
J1149	2	231.8	390.5	68.8
J115	4.4	350.4	505.2	67.1
J1150	2	239.1	390.5	65.6
J1151	2	257.4	390.5	57.7
J1152	2	279.1	390.5	48.3
J1153	2	273.7	390.5	50.6
J1154	2	223.1	390.5	72.6
J1155	2	211.8	390.5	77.4
J1156	2	206.5	390.5	79.7
J1157	2	200	390.5	82.5

ID	Demand (gpm)	Elevation (ft)	Head (ft)	Pressure (psi)
J1158	2	198.9	390.5	83
J1159	2	192.1	390.5	86
J116	4.4	348.7	505.2	67.8
J1160	2	195.8	390.5	84.4
J1161	2	188.2	390.5	87.7
J1162	2	190.9	390.5	86.5
J1163	2	168.7	390.5	96.1
J1164	2	166.2	390.5	97.2
J1165	2	168.5	390.5	96.2
J1166	2	169.9	390.5	95.6
J1167	2	164.3	390.5	98
J1168	2	150.3	390.5	104.1
J1169	2	151.7	390.5	103.5
J117	4.4	348.7	505.2	67.8
J1170	2	143.8	390.5	106.9
J1171	2.8	104.4	390.5	124
J1172	0	375.1	391.9	7.3
J1173	2	195.2	391.4	85
J1174	2	242.5	390.5	64.1
J1175	2	247.8	390.5	61.9
J1176	2	242.7	390.5	64
J1177	2	245.8	390.5	62.7
J1178	2	246.2	390.5	62.5
J1179	2	226.8	390.5	70.9
J118	4.4	346.2	505.1	68.9
J1180	2	234.8	390.5	67.5
J1181	2	271.7	391.6	51.9
J1182	2	271	391.5	52.2
J119	4.4	351.2	505.2	66.7
J1191	0	80.9	235.1	66.8
J1192	0	170	236.5	28.8
J1193	0	170	236.4	28.8
J1194	0	170	353.8	79.6
J1195	0	170	353.8	79.7
J12	4.4	403.7	508.6	45.4
J120	4.4	349.9	505.1	67.3
J121	4.4	346.4	505.1	68.8
J122	4.4	338.7	505	72.1
J123	4.4	342.5	504.9	70.4
J124	4.4	341.6	504.8	70.7
J125	4.4	343.3	504.8	70
J126	4.4	331.4	504.8	75.2
J127	4.4	328.5	504.8	76.4
J128	4.4	326.8	504.8	77.1

ID	Demand (gpm)	Elevation (ft)	Head (ft)	Pressure (psi)
J129	4.4	330.2	504.8	75.7
J13	4.4	401.4	508.6	46.4
J130	4.4	287.7	504.8	94.1
J131	4.4	352.9	505.2	66
J132	4.4	353.7	505.2	65.7
J133	4.4	347	505.2	68.5
J134	4.4	372.2	505.2	57.6
J135	4.4	356.6	505.2	64.4
J136	4.4	375.7	505.2	56.1
J137	4.4	349.9	505.2	67.3
J138	4.4	351.2	505.2	66.7
J139	4.4	368	505.2	59.4
J14	4.4	399.5	508.6	47.3
J140	4.4	366.6	505.2	60
J141	4.4	345.7	505.1	69.1
J142	4.4	355.8	505.1	64.7
J143	4.4	345.7	505.1	69.1
J144	4.4	339.4	505.1	71.8
J145	4.4	338.2	505.1	72.3
J146	4.4	337.3	505.9	73.1
J147	4.4	337.9	505.1	72.5
J148	4.4	345.8	505.1	69
J149	4.4	348.7	505.1	67.8
J15	4.4	384.7	508.6	53.7
J150	4.4	352	505.1	66.3
J151	4.4	329.3	505.1	76.2
J152	4.4	329.7	505.2	76
J153	4.4	321.7	505.2	79.5
J154	4.4	314.3	505.2	82.7
J155	4.4	311.5	505.3	84
J156	4.4	319.6	505.3	80.4
J157	4.4	302.3	505.3	88
J158	4.4	296.9	505.2	90.3
J159	4.4	302.9	505.3	87.7
J16	4.4	379.6	508.6	55.9
J160	4.4	301	505.3	88.5
J161	4.4	303.4	505.3	87.5
J162	4.4	311.7	505.4	83.9
J163	4.4	323.6	505.4	78.8
J164	4.4	306.2	505.4	86.3
J165	4.4	303.4	505.4	87.5
J166	4.4	300.2	505.4	88.9
J167	4.4	295.2	505.2	91
J168	4.4	296.5	505.1	90.4

ID	Demand (gpm)	Elevation (ft)	Head (ft)	Pressure (psi)
J169	4.4	292.3	505.2	92.2
J17	4.4	375.3	508.6	57.7
J170	4.4	294.4	505.1	91.3
J171	4.4	289.3	505.1	93.5
J172	4.4	306.8	505	85.9
J173	4.4	308.6	505	85.1
J174	4.4	303.3	505	87.4
J175	4.4	295.6	504.8	90.7
J176	4.4	287	504.8	94.4
J177	4.4	276.8	504.7	98.7
J178	4.4	276.7	504.7	98.8
J179	4.4	262	504.7	105.1
J18	4.4	387	508.6	52.7
J180	4.4	259.4	504.7	106.3
J181	4.4	241.6	504.6	113.9
J182	4.4	239.7	504.6	114.8
J183	4.4	234	504.6	117.2
J184	4.4	242.7	504.5	113.5
J185	4.4	218.6	504.5	123.9
J186	4.4	220.5	504.5	123.1
J187	4.4	194.1	504.6	134.5
J188	4.4	228.6	504.5	119.5
J189	4.4	222.1	504.5	122.4
J19	4.4	391.9	508.6	50.6
J190	4.4	226	504.5	120.7
J191	4.4	253.9	504.5	108.6
J192	4.4	257.8	504.5	106.9
J193	4.4	326.3	505.2	77.5
J194	4.4	335	505.1	73.7
J195	4.4	333	505.1	74.6
J196	4.4	237.3	504.5	115.8
J197	4.4	242	504.5	113.7
J198	4.4	260.7	504.5	105.6
J199	4.4	270.5	504.5	101.4
J2	0	365.1	507.6	61.7
J20	4.4	391.4	508.7	50.8
J200	4.4	274.2	504.5	99.8
J2000	0	220.7	236.7	6.9
J2001	0	208.7	238.2	12.8
J2002	0	205.1	239.5	14.9
J2004	13.9	175.7	336.1	69.5
J2005	13.9	171.7	336	71.2
J2006	13.9	176.5	336	69.1
J2007	13.9	178.5	336	68.3

ID	Demand (gpm)	Elevation (ft)	Head (ft)	Pressure (psi)
J2008	13.9	193.1	336	61.9
J2009	13.9	189.4	336	63.5
J201	4.4	273.1	504.5	100.3
J2010	3.4	145.8	237.6	39.8
J2011	3.4	143.4	237.5	40.8
J2012	3.4	142.5	237.5	41.2
J2013	3.4	145.8	237.5	39.7
J2014	3.4	150.9	237.5	37.5
J2015	3.4	152.5	237.5	36.8
J2016	3.4	165.9	237.5	31
J2017	3.4	169.5	237.5	29.5
J2018	3.4	130.3	236.9	46.2
J2019	3.4	95.8	235.6	60.6
J202	4.4	221.3	504.5	122.7
J2020	3.4	93.2	235.5	61.6
J2021	3.4	99.1	235.3	59
J2022	3.4	117.3	235.1	51
J2023	3.4	134.7	235	43.5
J2024	3.4	122.3	235	48.8
J2025	3.4	106.2	235	55.8
J2026	3.4	96.2	234.9	60.1
J2027	3.4	84.9	234.9	65
J2028	3.4	87.2	234.9	64
J2029	3.4	77.3	234.9	68.3
J203	4.4	292	504.5	92.1
J2030	3.4	87.2	234.9	64
J2031	3.4	68.4	234.9	72.1
J2032	3.4	69.5	234.9	71.7
J2033	3.4	80.3	234.9	67
J2034	3.4	81.7	234.9	66.4
J2035	3.4	87.1	234.9	64.1
J2036	3.4	75.9	234.9	68.9
J2037	3.4	65.3	234.9	73.5
J2038	3.4	58.3	234.9	76.5
J2039	3.4	58	234.9	76.7
J204	4.4	291.9	504.5	92.1
J2040	3.4	58.1	234.9	76.6
J2041	3.4	58.2	234.9	76.6
J2042	3.4	58.6	235	76.4
J2043	3.4	58.1	234.9	76.6
J2044	3.4	75	234.9	69.3
J2045	3.4	75.1	235	69.2
J2046	3.4	58.1	235	76.6
J2047	3.4	44.2	234.9	82.7

ID	Demand (gpm)	Elevation (ft)	Head (ft)	Pressure (psi)
J2048	3.4	20.1	234.9	93.1
J2049	3.4	16.1	234.9	94.8
J205	4.4	285.9	504.5	94.7
J2050	3.4	28.5	234.9	89.4
J2051	3.4	42.2	234.9	83.5
J2052	3.4	41.2	234.9	83.9
J2053	3.4	19.6	234.9	93.3
J2054	3.4	18.7	234.9	93.7
J2055	3.4	43.5	234.9	82.9
J2056	3.4	42.7	234.9	83.3
J2057	3.4	42.2	234.9	83.5
J2058	3.4	44	234.9	82.7
J2059	3.4	43.9	234.9	82.8
J206	4.4	293.7	504.5	91.3
J2060	3.4	48	234.9	81
J2061	3.4	52.1	234.9	79.2
J2062	3.4	53	234.9	78.8
J2063	3.4	54.3	234.9	78.3
J2064	3.4	55.7	234.9	77.6
J2065	3.4	55.2	234.9	77.9
J2066	3.4	56.4	234.9	77.4
J2067	3.4	82.4	234.9	66.1
J2068	3.4	93.6	234.9	61.2
J2069	3.4	41.6	234.9	83.8
J207	4.4	331.9	504.5	74.8
J2070	3.4	38.5	234.9	85.1
J2071	3.4	28.9	234.9	89.3
J2072	3.4	44.8	234.9	82.4
J2073	3.4	44.7	234.9	82.4
J2074	3.4	45.8	234.9	82
J2075	3.4	66	234.9	73.2
J2076	3.4	32.8	234.9	87.6
J2077	3.4	24.1	234.9	91.3
J2078	3.4	61.7	235	75.1
J2079	3.4	62.4	235	74.8
J208	4.4	321.7	504.5	79.2
J2080	3.4	67	235	72.8
J2081	3.4	68.9	235	72
J2082	3.4	69	235.1	72
J2083	3.4	68.2	235	72.3
J2084	3.4	69.2	235	71.8
J2085	3.4	77.4	235	68.3
J2086	3.4	79.6	235	67.4
J2087	3.4	86.2	235	64.5

ID	Demand (gpm)	Elevation (ft)	Head (ft)	Pressure (psi)
J2088	3.4	87.9	235	63.8
J2089	3.4	84.1	235	65.4
J209	4.4	324.1	504.5	78.2
J2090	3.4	81.7	235	66.4
J2091	3.4	128.9	235	46
J2092	3.4	59	234.9	76.2
J2093	3.4	59.4	234.9	76.1
J2094	3.4	57.9	234.9	76.7
J2095	3.4	58.7	234.9	76.4
J2096	3.4	43.1	235	83.2
J2097	3.4	41.6	235	83.8
J2098	3.4	33.6	235	87.3
J2099	3.4	43.2	235	83.1
J21	4.4	380.9	508.7	55.4
J210	4.4	323.8	504.6	78.3
J2100	3.4	24.9	235	91
J2101	3.4	24.1	235	91.4
J2102	3.4	29.3	235	89.1
J2103	3.4	26.8	235	90.2
J2104	3.4	27.9	235	89.7
J2105	3.4	34.8	235	86.7
J2106	3.4	41.7	235	83.8
J2107	3.4	45.8	235	82
J2108	3.4	72.3	235	70.5
J2109	3.4	93.4	235	61.4
J211	4.4	318.7	504.6	80.5
J2110	3.4	90.3	235	62.7
J2111	3.4	98.8	235.1	59.1
J2112	3.4	98.4	235.1	59.2
J2113	3.4	114	235	52.4
J2114	3.4	120	235	49.8
J2115	3.4	130	235	45.5
J2116	3.4	132	235	44.6
J2117	3.4	135	235	43.3
J2118	3.4	133	235	44.2
J2119	3.4	135	235	43.3
J212	4.4	310.4	504.6	84.1
J2120	3.4	122	235	48.9
J2121	3.4	128	235	46.3
J2122	3.4	120	235	49.8
J2123	3.4	108.6	235	54.8
J2124	3.4	123.2	235	48.4
J2125	3.4	110.5	235	53.9
J2126	3.4	109.2	235	54.5

ID	Demand (gpm)	Elevation (ft)	Head (ft)	Pressure (psi)
J2127	3.4	67.4	235	72.6
J2128	3.4	62.8	235	74.6
J2129	3.4	26.5	235	90.3
J213	4.4	293.2	504.7	91.6
J2130	3.4	27.6	235	89.9
J2131	3.4	30.7	235	88.5
J2132	3.4	30.2	235	88.7
J2133	3.4	41.6	235	83.8
J2134	3.4	34.7	235	86.8
J2135	3.4	34	235	87.1
J2137	3.4	34.2	235	87
J2138	3.4	38.4	235	85.2
J2139	3.4	38.2	235	85.3
J214	4.4	375.9	504.5	55.7
J2140	3.4	41.8	235.1	83.8
J2141	3.4	98.9	235.1	59
J2142	3.4	98.9	235.3	59.1
J2143	3.4	112.9	235.3	53
J2144	3.4	97.9	235.4	59.6
J2145	3.4	97.5	235.4	59.8
J2146	3.4	95.9	235.6	60.6
J2147	3.4	104.9	235.6	56.6
J2148	3.4	100.2	235.9	58.8
J2149	3.4	124.6	236.1	48.3
J215	4.4	379.6	504.5	54.1
J2150	3.4	130.2	236.2	45.9
J2151	3.4	136.5	236.2	43.2
J2152	3.4	113.9	236.2	53
J2153	3.4	47.5	235.1	81.3
J2154	3.4	46.9	235.1	81.5
J2155	3.4	47.6	235.1	81.2
J2156	3.4	52.5	235.1	79.1
J2157	3.4	49.8	235.1	80.3
J2158	3.4	65.1	235.1	73.6
J2159	3.4	66.2	235.1	73.2
J216	4.4	392.6	504.5	48.5
J2160	3.4	96.5	235.1	60
J2161	3.4	93.6	235.1	61.3
J2162	3.4	95.6	235.1	60.4
J2163	3.4	53.1	235.1	78.8
J2164	3.4	32.7	235.1	87.7
J2165	3.4	46.7	235.1	81.6
J2166	3.4	84.7	235.1	65.1
J2167	0	194	236.3	18.4

ID	Demand (gpm)	Elevation (ft)	Head (ft)	Pressure (psi)
J2168	3.4	178	236.3	25.3
J2169	3.4	183.4	236.3	22.9
J217	4.4	392.5	504.5	48.5
J2170	0	203	236.5	14.5
J2171	0	209.2	238.9	12.9
J2172	0	209.1	238.8	12.9
J2173	0.7	159.4	237.3	33.7
J2174	3.4	138.7	236.4	42.3
J2175	3.4	135.6	236.4	43.7
J2176	3.4	139.9	235.9	41.6
J2177	3.4	143.8	235.7	39.8
J2178	3.4	142.6	235.4	40.2
J2179	3.4	146.1	235.4	38.7
J218	4.4	392.3	504.5	48.6
J2180	3.4	156.3	235.1	34.1
J2181	3.4	108.8	235	54.7
J2182	3.4	107.8	235	55.1
J2183	3.4	92.1	234.9	61.9
J2184	3.4	90.2	234.9	62.7
J2185	3.4	86.5	234.9	64.3
J2186	3.4	104.1	235	56.7
J2187	3.4	94.8	234.9	60.7
J2188	3.4	90.3	234.9	62.6
J2189	3.4	79.1	234.8	67.5
J219	4.4	394.7	504.5	47.6
J2190	3.4	37.2	234.8	85.6
J2191	3.4	26.7	234.7	90.2
J2192	3.4	39.1	234.7	84.8
J2193	3.4	30.4	234.7	88.5
J2194	3.4	23.7	234.7	91.5
J2195	3.4	17.8	234.7	94
J2196	3.4	17.2	234.7	94.2
J2197	3.4	21.9	234.7	92.2
J2198	3.4	19.8	234.7	93.1
J2199	3.4	34.1	234.7	86.9
J22	4.4	374.3	508.6	58.2
J220	4.4	383.7	504.5	52.3
J2200	3.4	70.9	234.7	71
J2201	3.4	73.7	234.7	69.8
J2202	3.4	17.8	234.7	94
J2203	3.4	20.1	234.7	93
J2204	3.4	19.6	234.7	93.2
J2205	3.4	20.1	234.7	93
J2206	3.4	15.3	234.7	95.1

ID	Demand (gpm)	Elevation (ft)	Head (ft)	Pressure (psi)
J2207	3.4	18.8	234.8	93.6
J2208	3.4	35.2	234.8	86.5
J2209	3.4	39.1	234.8	84.8
J221	4.4	383.6	504.5	52.4
J2210	3.4	13.1	234.8	96.1
J2211	3.4	12.7	234.8	96.2
J2212	3.4	15.4	234.8	95.1
J2213	3.4	17.9	234.8	94
J2214	3.4	18.9	234.8	93.6
J2215	3.4	23.4	234.8	91.6
J2216	3.4	45.2	234.8	82.2
J2217	3.4	35.4	234.9	86.4
J2218	3.4	36.3	234.9	86
J2219	3.4	61.5	234.8	75.1
J222	4.4	372.3	504.5	57.3
J2220	3.4	80.2	234.8	67
J2221	3.4	58.9	234.9	76.2
J2222	3.4	60.2	234.9	75.7
J2223	3.4	71.6	234.9	70.7
J2224	3.4	75	234.9	69.3
J2225	3.4	67.9	234.9	72.3
J2226	3.4	67.2	234.9	72.7
J2228	3.4	32.7	234.8	87.6
J2229	3.4	41.9	234.8	83.6
J223	4.4	380.4	504.5	53.8
J2230	3.4	55.6	234.9	77.7
J2231	3.4	55.9	234.9	77.6
J2232	3.4	68.5	234.9	72.1
J2233	3.4	68.1	234.9	72.3
J2234	3.4	48	234.9	81
J2235	3.4	47.1	234.9	81.4
J2236	3.4	46.8	234.9	81.5
J2237	3.4	72.5	234.9	70.4
J2238	3.4	74	234.9	69.7
J2239	3.4	86.4	234.9	64.4
J224	4.4	374.3	504.5	56.4
J2240	3.4	91.1	234.9	62.3
J2241	3.4	114.7	235	52.2
J2242	3.4	118.6	235	50.4
J2243	3.4	120.9	235	49.4
J2244	3.4	126.5	235.1	47
J2245	3.4	54.3	235	78.3
J2246	3.4	89.4	235	63.1
J2247	3.4	92.5	235	61.7

ID	Demand (gpm)	Elevation (ft)	Head (ft)	Pressure (psi)
J2248	3.4	55.2	235	77.9
J2249	3.4	56	235	77.5
J225	4.4	379.7	504.5	54.1
J2250	3.4	65.5	235	73.5
J2251	3.4	103.2	235	57.1
J2252	3.4	105.2	235	56.3
J2253	3.4	108	235.1	55
J2254	3.4	108.5	235.1	54.8
J2255	3.4	115.4	235.1	51.9
J2256	3.4	128.4	235.1	46.2
J2257	3.4	117.7	235.2	50.9
J2258	3.4	118.4	235.2	50.6
J2259	3.4	124.8	235.4	47.9
J226	4.4	376.1	504.5	55.6
J2260	3.4	112.9	235.1	53
J2261	3.4	108.7	235.1	54.8
J2262	3.4	108.9	235.1	54.7
J2263	3.4	100.5	235	58.3
J2264	3.4	110	235.1	54.2
J2265	3.4	137.1	236.4	43
J2266	3.4	131.8	235.6	45
J2267	3.4	41.2	235	84
J2268	3.4	43.5	235	83
J2269	3.4	19.7	235	93.3
J227	4.4	373.2	504.5	56.9
J2270	3.4	19.5	235	93.4
J2271	3.4	13.7	235	95.9
J2272	3.4	19	235	93.6
J2273	3.4	14.3	235	95.6
J2274	3.4	12.8	235	96.3
J2275	3.4	18.9	235	93.6
J2276	3.4	19.7	235	93.3
J2277	3.4	20.1	235	93.1
J2278	3.4	19.8	235	93.2
J2279	3.4	33.5	235	87.3
J228	4.4	360.1	504.5	62.6
J2280	3.4	41.6	235	83.8
J2281	3.4	59.8	235	75.9
J2282	3.4	70.5	235	71.3
J2285	3.4	81.4	235	66.5
J2286	3.4	22.1	235	92.3
J2287	3.4	48.3	235	80.9
J2288	3.4	55.5	235	77.8
J2289	3.4	93.9	235	61.1

ID	Demand (gpm)	Elevation (ft)	Head (ft)	Pressure (psi)
J229	4.4	342.3	504.5	70.3
J2290	3.4	93.7	235	61.2
J2291	3.4	94	235	61.1
J2292	3.4	111.4	235	53.6
J2293	3.4	114.2	235	52.3
J2294	3.4	120	235	49.8
J2295	3.4	113.5	235	52.7
J2296	3.4	100.5	235.1	58.3
J2297	3.4	107.9	235.1	55.1
J2298	3.4	104.5	235.1	56.6
J2299	3.4	99.5	235.1	58.8
J23	4.4	404.2	508.8	45.3
J230	4.4	359	504.5	63
J2300	3.4	99.4	235.1	58.8
J2301	3.4	102.9	235.1	57.3
J2302	3.4	122.7	235.1	48.7
J2303	3.4	129.5	235.1	45.8
J2304	3.4	99.7	235.1	58.7
J2305	3.4	49.7	235.1	80.3
J2306	3.4	50.9	235.1	79.8
J2307	3.4	53.9	235.1	78.5
J2308	3.4	53	235.1	78.9
J2309	3.2	61.9	235.1	75
J231	4.4	360.5	504.5	62.4
J2310	3.4	56.6	235.1	77.3
J2311	3.4	55	235.1	78
J2312	3.4	56.1	235.1	77.6
J2313	3.4	51.5	235.1	79.5
J2314	3.4	55.4	235.1	77.9
J2315	3.4	63.7	235.1	74.3
J2316	3.4	68.9	235.1	72
J2317	3.4	55.6	235.1	77.8
J2318	3.4	68.8	235.1	72.1
J2319	3.4	65.7	235.1	73.4
J232	4.4	355.9	504.5	64.4
J2320	3.4	64.3	235.1	74
J2321	3.4	66.9	235.1	72.9
J2322	3.4	68	235.1	72.4
J2323	3.4	72.7	235.1	70.4
J2324	3.4	75.4	235.1	69.2
J2325	3.4	61	235.1	75.4
J2326	3.4	55.5	235.1	77.8
J2327	3.4	55.5	235.1	77.8
J2328	3.4	54.8	235.1	78.1

ID	Demand (gpm)	Elevation (ft)	Head (ft)	Pressure (psi)
J2329	3.4	53.3	235.1	78.8
J233	4.4	354.1	504.5	65.2
J2330	3.4	84.1	235.1	65.4
J2331	3.4	67.1	235.1	72.8
J2332	3.4	64.2	235.1	74
J2333	3.4	93.2	235.1	61.5
J2334	3.4	88.3	235.1	63.6
J2335	3.4	78.7	235.1	67.8
J2336	3.4	75.8	235.1	69
J2337	3.4	64.2	235.1	74.1
J2338	3.4	61.2	235.1	75.4
J2339	3.4	59.5	235.1	76.1
J234	4.4	304	504.5	86.9
J2340	3.4	61	235.1	75.4
J2341	3.4	60.7	235.1	75.6
J2342	3.4	58.3	235.1	76.6
J2343	3.4	57	235.1	77.2
J2344	3.4	57.7	235.1	76.9
J2345	3.4	59.6	235.1	76.1
J2346	3.4	63.4	235.1	74.4
J2347	3.4	133.9	235.1	43.9
J2348	3.4	108.6	235.1	54.8
J2349	3.4	58.7	235.1	76.4
J235	4.4	290.7	505.1	92.9
J2350	3.4	57.3	235.1	77
J2351	3.4	57.7	235.1	76.9
J2352	3.4	64.8	235.1	73.8
J2353	3.4	63.2	235.1	74.5
J2354	3.4	63.6	235.1	74.3
J2355	3.4	65.2	235.1	73.6
J2356	3.4	59.4	235.1	76.1
J2357	3.4	60	235.1	75.9
J2358	3.4	66.7	235.1	73
J2359	3.4	69	235.1	72
J236	4.4	313.2	504.6	82.9
J2360	3.4	83.5	235.1	65.7
J2361	3.4	70	235.1	71.5
J2362	3.4	62.5	235.4	74.9
J2363	3.4	61.6	235.3	75.3
J2364	3.4	66.5	235.3	73.2
J2365	3.4	58.4	235.2	76.6
J2366	3.4	62	235.4	75.1
J2367	3.4	61.6	235.4	75.3
J2368	3.4	60.8	235.4	75.7

ID	Demand (gpm)	Elevation (ft)	Head (ft)	Pressure (psi)
J2369	3.4	61.3	235.4	75.4
J237	4.4	307.4	504.6	85.4
J2370	3.4	58.8	235.3	76.5
J2371	3.4	58.1	235.3	76.8
J2372	3.4	57.4	235.2	77.1
J2373	3.4	56.4	235.2	77.5
J2374	3.4	100.7	235.1	58.2
J2375	3.4	93.1	235	61.5
J2376	3.4	77.2	235	68.4
J2377	3.4	58.5	235	76.5
J2378	3.4	48.3	235	80.9
J2379	3.4	72.7	235	70.3
J238	4.4	294.3	504.7	91.2
J2380	3.4	58.1	235	76.7
J2381	3.4	47.6	235	81.2
J2382	3.4	49.1	235	80.6
J2383	3.4	63.6	235	74.3
J2384	3.4	72.5	235	70.4
J2385	3.4	93.7	235	61.2
J2386	3.4	98.3	235	59.2
J2387	3.4	116.5	235	51.3
J2388	3.4	106.2	235	55.8
J2389	3.4	90.6	235	62.6
J2390	3.4	79.9	235	67.2
J2391	3.4	92.6	235.1	61.8
J2392	3.4	90.5	235.2	62.7
J2393	3.4	161.6	235.5	32
J2394	3.4	152.5	235.4	35.9
J2395	0	188.8	236	20.4
J2396	3.4	187.3	353.8	72.1
J2397	3.4	184.6	353.8	73.3
J2398	0	197.1	236.5	17.1
J2399	0	189.2	236.5	20.5
J24	4.4	402.2	508.8	46.2
J2400	0	170.9	236.5	28.4
J2401	0.8	171.6	353.8	78.9
J2402	3.4	164.9	353.8	81.8
J2403	3.4	156.8	353.8	85.3
J2404	3.4	140.2	353.8	92.5
J2405	3.4	194.9	353.8	68.8
J2406	3.4	76	235	68.9
J2407	3.4	70.3	235	71.3
J2408	3.4	66.6	235	73
J2409	3.4	75.7	235	69

ID	Demand (gpm)	Elevation (ft)	Head (ft)	Pressure (psi)
J2410	3.4	99.9	235	58.5
J2411	3.4	101.9	235	57.7
J2412	3.4	117.3	235	51
J2413	3.4	133.1	235	44.1
J2414	3.4	101.6	235	57.8
J2415	3.4	100.6	235	58.2
J2416	3.4	100.9	235	58.1
J2417	3.4	100.8	235	58.2
J2418	3.4	100.7	235	58.2
J2419	3.4	97.6	235	59.5
J2420	3.4	100.2	235	58.4
J2421	3.4	100.1	235	58.4
J2422	3.4	104	235	56.8
J2423	3.4	110.1	235	54.1
J2424	3.4	89.7	235	63
J2425	3.4	84.6	235	65.2
J2426	3.4	110.6	235	53.9
J2427	3.4	92.2	235	61.9
J2428	3.4	88.9	235	63.3
J2429	3.4	43.2	235	83.1
J2430	3.4	96.6	235	59.9
J2431	3.4	106.2	235	55.8
J2432	3.4	105.7	235	56
J2433	3.4	104.7	235	56.5
J2434	3.4	73.2	235	70.1
J2435	3.4	78	235	68
J25	4.4	405.9	508.8	44.6
J2500	0	140	235.1	41.2
J2502	0	225	342.9	51.1
J2503	0	208	344.2	59
J2504	0	39	234.8	84.9
J2505	0	36	234.8	86.2
J2506	0	89.7	235	63
J2507	5.3	45.7	234.9	82
J2508	5.3	34	234.9	87
J2509	0.7	360	507.6	63.9
J2510	0	370.8	507.6	59.3
J2511	0	325.9	507.6	78.7
J2512	0	365	507.6	61.8
J2513	4.4	320	505.6	80.4
J2514	4.4	355	505.6	65.2
J2515	4.4	355	505.6	65.2
J2516	4.4	330	505.6	76.1
J2517	4.4	335	505.6	73.9

ID	Demand (gpm)	Elevation (ft)	Head (ft)	Pressure (psi)
J2518	0	148	390.5	105.1
J2520	0	100	235.1	58.5
J2521	0	90	234.9	62.8
J2522	0	150	234.9	36.8
J2523	0	175	234.9	26
J2524	0	70	234.9	71.5
J2525	0	208	238.6	13.2
J2526	6	210	345.1	58.5
J2527	6	175	346.8	74.4
J2528	6	200	346	63.3
J2529	6	225	346.4	52.6
J2530	0	110	349.5	103.8
J2531	6	160	347.4	81.2
J2532	0	110	463.1	153
J2533	0	230	465.2	101.9
J2534	6	210	465.2	110.6
J2535	6	198	465.2	115.8
J2536	6	230	465.2	101.9
J2537	6	250	465.2	93.3
J2538	6	260	465.2	88.9
J2539	6	240	465.2	97.6
J2540	0	328	507.6	77.8
J2541	0	210	336.1	54.7
J2542	0	322	390.6	29.7
J2543	0	252	540	124.8
J2544	0	256	540	123.1
J2545	0	120	390.5	117.2
J2546	0	120	390.5	117.2
J2547	0	103	235.1	57.2
J26	0.7	404.7	508.8	45.1
J27	0.7	407.5	509.1	44
J28	0.7	406.8	509.1	44.3
J29	0.7	407.3	509.1	44.1
J3	4.4	325.9	507.6	78.7
J30	0.7	404.1	509.1	45.5
J3000	0.9	376	473.6	42.3
J3001	13.9	372	470.2	42.6
J3002	13.9	371	469.8	42.8
J3003	13.9	347.1	468.4	52.6
J3004	13.9	321.8	467.8	63.2
J3005	13.9	316.9	467.5	65.2
J3006	13.9	300.7	467.3	72.2
J3007	13.9	297.1	467.2	73.7
J3008	13.9	300.4	466.7	72.1

ID	Demand (gpm)	Elevation (ft)	Head (ft)	Pressure (psi)
J3009	13.9	285.6	466.5	78.4
J3010	13.9	279.6	465.9	80.7
J3011	13.9	335.9	468.3	57.4
J3012	13.9	325.7	467.6	61.5
J3013	13.9	332.7	467	58.2
J3014	13.9	333.1	466.6	57.8
J3015	13.9	339.2	466.4	55.1
J3016	13.9	352.2	466	49.3
J3017	13.9	357.2	465.8	47
J3018	13.9	364.2	465.9	44.1
J3019	13.9	361	465.9	45.5
J3020	13.9	364	465.9	44.2
J3021	13.9	366	465.9	43.3
J3022	13.9	368	465.9	42.4
J3023	13.9	362	465.9	45
J3024	13.9	345.9	465.9	52
J3025	13.9	352.5	465.9	49.2
J3026	13.9	362.1	465.2	44.7
J3027	13.9	348.3	464.2	50.2
J3028	13.9	316	463.5	63.9
J3029	13.9	312	463.3	65.6
J3030	13.9	304.9	463.2	68.6
J3031	13.9	307	463.2	67.7
J3032	13.9	318.3	466.6	64.3
J3033	13.9	320	466.6	63.5
J3034	13.9	298.2	466.6	73
J3035	13.9	283.4	466.6	79.4
J3036	13.9	277.4	466.6	82
J3037	13.9	279.6	466.6	81
J3038	13.9	275	466.6	83
J3039	13.9	280.9	466.7	80.5
J3040	13.9	295.4	466.7	74.2
J3041	13.9	294.7	462.8	72.9
J3042	13.9	281.3	462.4	78.4
J3043	13.9	282.8	462.5	77.9
J3044	13.9	294.5	461.7	72.5
J3045	13.9	295.9	461.6	71.8
J3046	13.9	294	461.3	72.5
J3047	13.9	283.4	461.1	77
J3048	13.9	248.5	460.4	91.8
J3049	13.9	336.8	466.6	56.2
J3050	13.9	290.1	462	74.5
J3052	13.9	285.8	466.4	78.3
J3053	13.9	282.4	466.4	79.7

ID	Demand (gpm)	Elevation (ft)	Head (ft)	Pressure (psi)
J3054	0.9	306.5	466.4	69.3
J3055	0.9	288.2	466.4	77.2
J3056	12.3	86.9	463.1	163
J3057	13.9	111.7	463.1	152.2
J3058	13.9	157.2	463.6	132.8
J3059	13.9	167.8	463.9	128.3
J3060	13.9	222.9	465.3	105
J3061	13.9	305.3	466.4	69.8
J3062	0.9	307.8	466.4	68.7
J31	0.7	407.5	509.2	44.1
J32	0.7	406.5	509.4	44.6
J33	0.7	403.4	509	45.7
J34	4.4	404.2	508.8	45.3
J35	4.4	393.8	506.9	49
J36	4.4	392.1	506.9	49.7
J37	4.4	393.6	506.9	49.1
J38	4.4	388.5	506.9	51.3
J39	4.4	381.9	506.3	53.9
J4	4.4	370.8	507.6	59.3
J40	4.4	388.8	505.9	50.8
J41	4.4	383.2	505.9	53.2
J42	4.4	391.9	505.8	49.3
J43	4.4	392.4	505.7	49.1
J44	4.4	393.2	505.7	48.8
J45	4.4	391.6	505.7	49.4
J46	4.4	390.8	505.7	49.8
J47	4.4	375.8	505.6	56.2
J48	4.4	368.2	505.6	59.6
J49	4.4	360.9	505.6	62.7
J5	4.4	399.6	507.6	46.8
J50	4.4	361	505.6	62.7
J51	4.4	359.1	505.6	63.5
J52	4.4	370.7	505.6	58.5
J53	4.4	323.5	505.6	78.9
J54	4.4	313.1	505.6	83.4
J55	4.4	381.2	506.2	54.1
J56	4.4	380.1	506.1	54.6
J57	4.4	370	506.1	59
J58	4.4	371	506	58.5
J59	4.4	367	506	60.2
J6	4.4	400	507.6	46.6
J60	4.4	370	506	59
J61	4.4	371.9	506	58.1
J62	4.4	373.7	506	57.3

ID	Demand (gpm)	Elevation (ft)	Head (ft)	Pressure (psi)
J63	4.4	382.4	506	53.6
J64	4.4	372.6	506	57.8
J65	4.4	359.9	505.4	63
J66	4.4	387.6	505.4	51.1
J67	4.4	384.5	505.4	52.4
J68	4.4	384.9	505.4	52.2
J69	4.4	380.7	505.3	54
J7	4.4	400.1	507.6	46.6
J70	4.4	377.1	505.4	55.6
J71	4.4	375.7	505.4	56.2
J72	4.4	375	505.4	56.5
J73	4.4	375.5	505.3	56.2
J74	4.4	376.6	505.3	55.8
J75	4.4	380.2	505.3	54.2
J76	4.4	373.8	505.2	57
J77	4.4	375.6	505.2	56.1
J78	4.4	371.6	505.2	57.9
J79	4.4	367.4	505.2	59.7
J8	4.4	400.8	507.6	46.3
J80	4.4	368.6	505.1	59.2
J81	4.4	369.9	505.1	58.6
J82	4.4	366.4	505.1	60.1
J83	4.4	364.8	505.1	60.8
J84	4.4	354.7	505.1	65.2
J85	4.4	363.7	505.1	61.3
J86	4.4	365.9	505.1	60.3
J87	4.4	351.5	505.1	66.6
J88	4.4	358	505.1	63.7
J89	4.4	356.1	505.1	64.6
J9	4.4	401	507.5	46.2
J90	4.4	363.9	505.2	61.2
J91	4.4	363.7	505.1	61.3
J92	4.4	353.5	505.1	65.7
J93	4.4	360.3	505.1	62.8
J94	4.4	349.5	505.1	67.4
J95	4.4	354.2	505.1	65.4
J96	4.4	351.6	505.1	66.5
J97	4.4	350.9	505.1	66.8
J98	4.4	347.7	505.1	68.2
J99	4.4	346	505.1	69

APPENDIX F

COLIFORM MONITORING PLAN, DBP MONITORING PLAN, AND NOTIFICATION LETTERS

Coliform Monitoring Plan

Coliform Monitoring Plan for: City of Poulsbo-Public Works

A. System Information

Plan Date: 9-18-14

Water System Name **City of Poulsbo-Public Works**	**County** **Kitsap**	**System I.D. Number** **691506**
Name of Plan Preparer **Keith Svarthumle**	**Position** **Utilities Foreman**	**Daytime Phone #** **360-394-9755**
Sources: DOH Source Number, Source Name, Well Depth, Pumping Capacity	S02-Lincoln Well-299'-475gpm S04-Big Valley #1-302'-200gpm S05-Pugh Well-280'-480gpm S06-Big Valley #2-455'-520gpm S08-Westside Well-610'-500gpm	S01-Non active Spring S07-Finn Hill/Nike Well 108' 100gpm Non-Active
Storage: List and Describe	Finn Hill Tank 508,000 gal / 4th Ave Tanks 2@ 125,000 gal each Wilderness Park Tank 1,036,000 gal / Raab Park Tank 150,000 gal Caldart Tanks 2@ 75,000 gal each / Pugh Rd Tank 1,000,000 gal Olhava Tank 993,000 gal	
Treatment: Source Number & Process	All sources chlorinated / fluoridated	
Pressure Zones: Number and name	#244 Low Zone / #396 Middle Zone #514 East High Zone / #492 West High Zone	
Population by Pressure Zone:	n/a	
Number of Routine Samples Required Monthly by Regulation: 15 (10 per month June/July/Aug)	**Number of Sample Sites Needed to Represent the Distribution System: 18**	
***Request DOH Approval of Triggered Source Monitoring Plan?**	**Yes** ☒ **No** ☐	

*If approval is requested a fee will be charged for the review.

B. Laboratory Information

Laboratory Name: **Twiss Analytical**	**Office Phone #** **360-779-5141**
Address: 26276 12 Trees Ln NW, Poulsbo, WA 98370	**After Hours #** **360-536-3979**
Hours of Operation: **8:00am-5:00pm Monday-Friday**	
Contact Name: **Dianna Temple**	
Emergency Laboratory Name: **Same as above**	

C. Wholesaling of Groundwater

	Yes	No
We are a consecutive system and purchase groundwater from another water system.	☐	☒
If yes, Water System Name: _____ Contact Name: _____ Telephone Numbers: _____		
We sell groundwater to other public water systems.	☐	☒
If yes, Water System Name: _____ Contact Name: _____ Telephone Numbers: _____		
Water System Name: _____ Contact Name: _____ Telephone Numbers: _____		
Water System Name: _____ Contact Name: _____ Telephone Numbers: _____		
Water System Name: _____ Contact Name: _____ Telephone Number: _____		
Water System Name: _____ Contact Name: _____ Telephone Numbers: _____		

D. Routine, Repeat, and Triggered Source Sample Locations*

Location/Address for **Routine Sample Sites**	Location/Address for **Repeat Sample Sites**	Sources for **Triggered Sample Sites****
X1.	**1-1. 2138 Mesford St.**	**S02**
LDS Church	**1-2. 19225 23rd Ave.**	**S05**
2138 Mesford St.	**1-3. 2111 Mesford St.**	
	1-4. S02-S05	
X2.	**2-1. 18360 Caldart Ave**	**S02**
NK School Admin	**2-2. 18400 Caldart Ave**	**S05**
18360 Caldart Ave	**2-3. 18349 Caldart Ave**	
	2-4. S02-S05	
X3.	**3-1. 1779 Hostmark St**	**S02**
North Point Church	**3-2. 2003 Hostmark St**	**S05**
1779 Hostmark St	**3-3. 1780 Hostmark St**	
	3-4. S02-S05	

Location/Address for **Routine Sample Sites**	Location/Address for **Repeat Sample Sites**	Sources for **Triggered Sample Sites****
X4.	**4-1. 19953 Kevos Pnd D.**	**S02**
19953 Kevos Pond Dr	**4-2. 2692 Kevos Pnd DR**	**S05**
	4-3. 19951 Noll RD	
	4-4. S02-S05	
X5.	**5-1. 20002 Caldart Ave**	**S02**
City Cemetary	**5-2. 19880 Mosjon Circ.**	**S05**
20002 Caldart Ave	**5-3. 1515 Nordic PL**	
	5-4. S02-S05	
X6.	**6-1. 1040 Hostmark St**	**S02**
Olympic Place 1	**6-2. 18771 11th Ave**	**S05**
1040 Hostmark St	**6-3. 1050 Hostmark St**	
	6-4. S02-S05	

Location/Address for **Routine Sample Sites**	Location/Address for **Repeat Sample Sites**	Sources for **Triggered Sample Sites****
X7.	**7-1.** 19472 Powder Hill RD	**S02**
19472 Powder Hill RD	**7-2. 1250 Lincoln RD**	**S05**
	7-3. 19245 10th Ave	
	7-4. S02-S05	
X8.	**8-1.** 18943 Caldart Ave	**S02**
St Olaf Church	**8-2. 18825 Caldart Ave**	**S05**
18943 Caldart Ave	**8-3. 19201 Caldart Ave**	
	8-4. S02-S05	
X9.	**9-1.** 19917 7th Ave	**S02**
Creekside BLD.	**9-2. 19880 7th Ave**	**S05**
19917 7th Ave	**9-3. 19950 7th Ave**	**S04**
	9-4. S02-S05-S04-S06	**S06**

Location/Address for **Routine Sample Sites**	Location/Address for **Repeat Sample Sites**	Sources for **Triggered Sample Sites****
X10.	**10-1. 200 NE Moe St**	**S02**
City Hall	**10-2. 19032 Jensen Way**	**S05**
200 NE Moe St	**10-3. 18970 3rd Ave**	**S04**
	10-4. S02-S05-S04-S06	**S06**
X11.	**11-1.** 20201 Front St	**S02**
Lindvig Station	**11-2. 225 Lindvig Way**	**S05**
20201 Front St	**11-3. 19781 Front St**	**S04**
	11-4. S02-S05-S04-S06	**S06**
X12.	**12-1.** 20441 Viking Ave	**S02**
Red Apple Market	**12-2. 20377 Viking Ave**	**S05**
20441 Viking Ave	**12-3. 20487 Viking Ave**	**S04**
	12-4. S02-S05-S04-S06	**S06**

Location/Address for **Routine Sample Sites**	Location/Address for **Repeat Sample Sites**	Sources for **Triggered Sample Sites****
X13.	**13-1.** 1020 Forest Rock LN	**S02**
M&M Market	**13-2. 20350 Little Valley**	**S05**
1020 Forest Rock LN	**13-3. 1016 Forest Rock L**	**S04**
	13-4. S02-S05-S04-S06	**S06**
X14.	**14-1.** 17791 Fjord Dr	**S02**
Liberty Bay Marina	**14-2. 17749 Fjord Dr**	**S05**
17791 Fjord Dr	**14-3. Oyster Plant Park**	**S04**
	14-4. S02-S05-S04-S06	**S06**
X15.	**15-1.** 19360 Viking Ave	**S02**
Liberty Shores	**15-2. 19467 Viking Ave**	**S05**
19360 Viking Ave	**15-3. 19410 Viking Ave**	**S04**
	15-4. S02-S05-S04-S06	**S06**

Location/Address for **Routine Sample Sites**	Location/Address for **Repeat Sample Sites**	Sources for **Triggered Sample Sites****
X16.	**16-1.** 21505 Market PL	**S08**
21505 Market PL	**16-2. 21599 Market pl**	
	16-3. 21200 Olhava way	
	16-4. S08	
X17.	**17-1.** 21553 Olhava Way	**S08**
21553 Olhava Way	**17-2. 21505 Market Pl**	
	17-3. 21599 Market Pl	
	17-4. S08	
X18.	**18-1. Stendahl Park**	**S08**
Stendahl Park	**18-2. 709 Rasmussen ct**	
	18-3. 701 Rasmussen Ct	
	18-4. S08	

*NOTE: If you need more than three routine samples to cover the distribution system, attach additional sheets as needed.

**** When you collect the repeats, you must sample every source that was in use when the original routine sample was collected.**

Important Notes for Sample Collector:

_____

_____

_____

_____

_____

_____

E. Reduced Triggered Source Monitoring Justification (add sheets as needed):

F. Routine Sample Rotation Schedule

Month	Routine Site(s)	Month	Routine Site(s)
January	1,2,6,12,16,14,13,9,11,17,8,7,5, 15,18	July	1,2,6,12,16,7,5,15,18, 9
February	1,2,6,12,16,14,13,9,11,17,8,7,5, 15,18	August	13,9,11,17,8,7,5,15, 18,2
March	1,2,6,12,16,14,13,9,11,17,8,7,5, 15,18	September	1,2,6,12,16,14,13,9, 11,17,8,7,5,15,18
April	1,2,6,12,16,14,13,9,11,17,8,7,5, 15,18	October	1,2,6,12,16,14,13,9, 11,17,8,7,5,15,18
May	1,2,6,12,16,14,13,9,11,17,8,7,5, 15,18	November	1,2,6,12,16,14,13,9, 11,17,8,7,5,15,18
June	1,2,6,12,16,14,13,9,11,17	December	1,2,6,12,16,14,13,9, 11,17,8,7,5,15,18

G. Five Routine Sample Locations – Month after an Unsatisfactory Sample

Location/Address for Routine Sample Site(s) Unsatisfactory the Previous Month	Location/Address for the five Routine Sample Sites
X1.	1.
Not applicable as we collect More than five routine samples Per month.	2. 3. 4. 5.
X2.	1. 2. 3. 4. 5.
X3.	1. 2. 3. 4. 5.

H. *E. coli*-Present Sample Response

Distribution System *E. coli* Response Checklist				
Background Information	**Yes**	**No**	**N/A**	**To Do List**
We inform staff members about activities within the distribution system that could affect water quality.	☒	☐	☐	☐
We document all water main breaks, construction & repair activities, and low pressure and outage incidents.	☒	☐	☐	☐
We can easily access and review documentation on water main breaks, construction & repair activities, low pressure and outage incidents.	☒	☐	☐	☐
Our Cross-Connection Control Program is up-to-date.	☒	☐	☐	☒
We test all cross-connection control devices annually as required, with easy access to the proper documentation.	☒	☐	☐	☒
We routinely inspect all treatment facilities for proper operation.	☒	☐	☐	☐
We have procedures in place for disinfecting and flushing the water system if it becomes necessary.	☒	☐	☐	☐
We can activate an emergency intertie with an adjacent water system in an emergency.	☒	☐	☐	☐
We have a map of our service area boundaries.	☒	☐	☐	☐
We have consumers who may not have access to bottled or boiled water.	☒	☐	☐	☐
There is a sufficient supply of bottled water immediately available to our customers who are unable to boil their water.	☒	☐	☐	☐
We have identified the contact person at each day care, school, medical facility, food service, and other customers who may have difficulty responding to a Health Advisory.	☐	☐	☐	☒
We have messages prepared and translated into different languages to ensure our consumers will understand them.	☐	☐	☐	☒
We have the capacity to print and distribute the required number of notices in a short time period.	☒	☐	☐	☐
Policy Direction	**Yes**	**No**	**N/A**	**To Do List**
We have discussed the issue of *E. coli*-present sample results with our policy makers.	☒	☐	☐	☐
If we find *E. coli* in a routine distribution sample, the policy makers want to wait until repeat test results are available before issuing advice to water system customers.	☒	☐	☐	☐
(Cont.)				

Distribution System *E. coli* Response Checklist				
Potential Public Notice Delivery Methods	**Yes**	**No**	**N/A**	**To Do List**
It is feasible to deliver a notice going door-to-door.	☒	☐	☐	☐
We have a list of all of our customers' addresses.	☒	☐	☐	☐
We have a list of customer telephone numbers or access to a Reverse 9-1-1 system.	☒	☐	☐	☐
We have a list of customer email addresses.	☐	☒	☐	☐
We encourage our customers to remain in contact with us using social media.	☐	☐	☐	☒
We have an active website we can quickly update to include important messages.	☒	☐	☐	☐
Our customers drive by a single location where we could post an advisory and expect everyone to see it.	☐	☒	☐	☐
We need a news release to supplement our public notification process.	☒	☐	☐	☐

E. coli-Present Triggered Source Sample Response Checklist – All Sources				
Background Information	**Yes**	**No**	**N/A**	**To Do List**
We review our sanitary survey results and respond to any recommendations affecting the microbial quality of our water supply.	☒	☐	☐	☐
We address any significant deficiencies identified during a sanitary survey.	☒	☐	☐	☐
There are contaminant sources within our Wellhead Protection Area that could affect the microbial quality of our source water, and If yes, we can eliminate them.	☒ ☒	☐ ☐	☐ ☐	☐ ☐
We routinely inspect our well site(s).	☒	☐	☐	☐
We have a good raw water sample tap installed at each source.	☒	☐	☐	☐
After we complete work on a source, we disinfect the source, flush, and collect an investigative sample.	☒	☐	☐	☐
(Cont.)				

***E. coli*-Present Triggered Source Sample Response Checklist – All Sources**				
Public Notice	**Yes**	**No**	**N/A**	**To Do List**
We discussed the requirement for immediate public notice of an *E. coli*-present source sample result with our water system's governing body (board of directors or commissioners) and received direction from them on our response plan.	☐	☐	☐	☒
We discussed the requirement for immediate public notice of an *E. coli*-present source sample result with our wholesale customers and encouraged them to develop a response plan.	☐	☐	☒	☐
We have prepared templates and a communications plan that will help us quickly distribute our messages.	☒	☐	☐	☐

E. coli-Present Triggered Source Sample Response Checklist–Source S2				
Alternate Sources	**Yes**	**No**	**N/A**	**To Do List**
We can stop using this source and still provide reliable water service to our customers.	☒	☐	☐	☐
We have an emergency intertie with a neighboring water system that we can use until corrective action is complete (perhaps for several months).	☐	☒	☐	☐
We can provide bottled water to all or part of the distribution system for an indefinite period.	☒	☐	☐	☐
We can quickly replace our existing source of supply with a more protected new source.	☐	☒	☐	☐
Temporary Treatment	**Yes**	**No**	**N/A**	**To Do List**
This source is continuously chlorinated, and our existing facilities can provide 4-log virus treatment (CT = 6) before the first customer. If yes, at what concentration? .60 mg/L	☒	☐	☐	☐
We can quickly introduce chlorine into the water system and take advantage of the existing contact time to provide 4-log virus treatment to a large portion of the distribution system.	☒	☐	☐	☐
We can reduce the production capacity of our pumps or alter the configuration of our storage quantities (operational storage) to increase the amount of time the water stays in the system before the first customer to achieve CT = 6.	☒	☐	☐	☐
We can alter the demand for drinking water (maximum day or peak hour) through conservation messages to increase the time the water is in the system prior to the first customer in order to achieve 4-log virus treatment with chlorine.	☒	☐	☐	☐

*NOTE: If your system has multiple sources, you may want to complete a separate checklist for each source.

E. coli-Present Triggered Source Sample Response Checklist–Source S4				
Alternate Sources	**Yes**	**No**	**N/A**	**To Do List**
We can stop using this source and still provide reliable water service to our customers.	☒	☐	☐	☐
We have an emergency intertie with a neighboring water system that we can use until corrective action is complete (perhaps for several months).	☒	☐	☐	☐
We can provide bottled water to all or part of the distribution system for an indefinite period.	☒	☐	☐	☐
We can quickly replace our existing source of supply with a more protected new source.	☐	☒	☐	☐
Temporary Treatment	**Yes**	**No**	**N/A**	**To Do List**
This source is continuously chlorinated, and our existing facilities can provide 4-log virus treatment (CT = 6) before the first customer. If yes, at what concentration? .60 mg/L	☒	☐	☐	☐
We can quickly introduce chlorine into the water system and take advantage of the existing contact time to provide 4-log virus treatment to a large portion of the distribution system.	☒	☐	☐	☐
We can reduce the production capacity of our pumps or alter the configuration of our storage quantities (operational storage) to increase the amount of time the water stays in the system before the first customer to achieve CT = 6.	☒	☐	☐	☐
We can alter the demand for drinking water (maximum day or peak hour) through conservation messages to increase the time the water is in the system prior to the first customer in order to achieve 4-log virus treatment with chlorine.	☒	☐	☐	☐

E. coli-Present Triggered Source Sample Response Checklist–Source S5				
Alternate Sources	**Yes**	**No**	**N/A**	**To Do List**
We can stop using this source and still provide reliable water service to our customers.	☒	☐	☐	☐
We have an emergency intertie with a neighboring water system that we can use until corrective action is complete (perhaps for several months).	☐	☒	☐	☐
We can provide bottled water to all or part of the distribution system for an indefinite period.	☒	☐	☐	☐
We can quickly replace our existing source of supply with a	☐	☒	☐	☐

more protected new source.				
Temporary Treatment	**Yes**	**No**	**N/A**	**To Do List**
This source is continuously chlorinated, and our existing facilities can provide 4-log virus treatment (CT = 6) before the first customer. If yes, at what concentration? .60 mg/L	☒	☐	☐	☐
We can quickly introduce chlorine into the water system and take advantage of the existing contact time to provide 4-log virus treatment to a large portion of the distribution system.	☒	☐	☐	☐
We can reduce the production capacity of our pumps or alter the configuration of our storage quantities (operational storage) to increase the amount of time the water stays in the system before the first customer to achieve CT = 6.	☒	☐	☐	☐
We can alter the demand for drinking water (maximum day or peak hour) through conservation messages to increase the time the water is in the system prior to the first customer in order to achieve 4-log virus treatment with chlorine.	☒	☐	☐	☐

E. coli-Present Triggered Source Sample Response Checklist–Source S6				
Alternate Sources	**Yes**	**No**	**N/A**	**To Do List**
We can stop using this source and still provide reliable water service to our customers.	☒	☐	☐	☐
We have an emergency intertie with a neighboring water system that we can use until corrective action is complete (perhaps for several months).	☒	☐	☐	☐
We can provide bottled water to all or part of the distribution system for an indefinite period.	☒	☐	☐	☐
We can quickly replace our existing source of supply with a more protected new source.	☐	☒	☐	☐
Temporary Treatment	**Yes**	**No**	**N/A**	**To Do List**
This source is continuously chlorinated, and our existing facilities can provide 4-log virus treatment (CT = 6) before the first customer. If yes, at what concentration? .60 mg/L	☒	☐	☐	☐
We can quickly introduce chlorine into the water system and take advantage of the existing contact time to provide 4-log virus treatment to a large portion of the distribution system.	☒	☐	☐	☐
We can reduce the production capacity of our pumps or alter the configuration of our storage quantities (operational storage) to increase the amount of time the water stays in the system before the first customer to achieve CT = 6.	☒	☐	☐	☐

We can alter the demand for drinking water (maximum day or peak hour) through conservation messages to increase the time the water is in the system prior to the first customer in order to achieve 4-log virus treatment with chlorine.	☒	☐	☐	☐

E. coli-Present Triggered Source Sample Response Checklist–Source S8				
Alternate Sources	**Yes**	**No**	**N/A**	**To Do List**
We can stop using this source and still provide reliable water service to our customers.	☐	☒	☐	☐
We have an emergency intertie with a neighboring water system that we can use until corrective action is complete (perhaps for several months).	☒	☐	☐	☐
We can provide bottled water to all or part of the distribution system for an indefinite period.	☒	☐	☐	☐
We can quickly replace our existing source of supply with a more protected new source.	☐	☒	☐	☐
Temporary Treatment	**Yes**	**No**	**N/A**	**To Do List**
This source is continuously chlorinated, and our existing facilities can provide 4-log virus treatment (CT = 6) before the first customer. If yes, at what concentration? .60 mg/L	☒	☐	☐	☐
We can quickly introduce chlorine into the water system and take advantage of the existing contact time to provide 4-log virus treatment to a large portion of the distribution system.	☒	☐	☐	☐
We can reduce the production capacity of our pumps or alter the configuration of our storage quantities (operational storage) to increase the amount of time the water stays in the system before the first customer to achieve CT = 6.	☒	☐	☐	☐
We can alter the demand for drinking water (maximum day or peak hour) through conservation messages to increase the time the water is in the system prior to the first customer in order to achieve 4-log virus treatment with chlorine.	☒	☐	☐	☐

Distribution System *E. coli* Response Plan

If we have *E. coli* in our distribution system we will immediately:

1. Call DOH.
2. Collect repeat and triggered source samples per Part D. Collect additional investigative samples as necessary.
3. Inspect our water system facilities, including treatment plants for proper operation.
4. Interview staff to determine whether anything unusual was happening in the water system service area, especially since the previous month's sample(s).
5. Review new construction activities, water main breaks, and pressure outages that may have occurred during the previous month.
6. Review Cross-Connection Control Program status.
7. Discuss with DOH whether to issue a Health Advisory based on the findings of steps 3-6.

E. coli-Present Triggered Source Sample Response Plan – Source ___

If we have *E. coli* in Source ___ water we will immediately:

1. Call DOH.
2. Distribute required notice.
3. Interview staff.
4. In concert with DOH, begin work on corrective action plan. Corrective action options: discontinue use of the contaminated source; provide 4-log virus treatment of the source.

Disinfection Byproducts Monitoring Plan

System Name	City of Poulsbo	**Type and Population of System**	GW only >10,000
PWSID#	691506		
Date	11/18/2008		
Completed by	Keith Svarthumle-Utilities Foreman		

Monitoring requirements are additive; for example a system using ozone and chlorine, or chlorine with conventional filtration must meet the monitoring requirements for both.

Treatment Provided

Chlorine (gas, hypochlorite, etc) or Chloramines

Identify the number of "Treatment Plants" serving your system

A "Treatment Plant" or "TP" may be:

- A single surface water source
- A single well source
- A combination of multiple, individual sources (if all of the water is blended prior to distribution)

4

Enter Description of Treatment Plant Below

TP1	Lincoln Well-Groundwater Source-450 G.P.M. Water Right-2600 NE Lincoln RD NE
TP2	Pugh RD Well-Groundwater Source-590 G.P.M. Water Permit-20230 Pugh RD NE
TP3	Big Valley #1 #2 Combined Groundwater Source-Well #1 200 G.P.M. Well #2 600 G.P.M.22727 Big Valley Rd
TP4	Westside Well 600 G.P.M Groundwater Source- 22900 Viking Ave NW

Disinfectant Monitoring

Required:

Chlorine residuals must be measured at the same time and place as routine or repeat coliform samples
MRDL for chlorine and chloramines = 4.0 mg/l as Cl2

Compliance

Compliance is based on the running annual average (RAA) of 12 consecutive months
DOH will determine compliance for chlorine MRDL
Daily residual measurements will / will not be included in the compliance calculations (circle one)

Byproduct Monitoring

Required:

TTHM & HAA5 - 1 sample per quarter per treatment plant (four samples total)
[samples should be collected at MRT relative to each treatment plant]
TTHM MCL = 0.080 mg/l, HAA5 MCL = 0.060 mg/l

Compliance

Compliance is based on the Running Annual Average (RAA) of quarterly results or averages
Any RAA of quarterly averages that exceeds the MCL is a violation
DOH will determine compliance for TTHM & HAA5 based on data submitted by the lab

Specify sampling location(s) for:

TTHM & HAA5	Enter Sampling Locations	Enter sampling schedule
TP1 (MRT)	Baywatch Hydrant	Annually-July
TP2 (MRT)	Baywatch Hydrant	Annually-July
TP3 (MRT)	Liberty Shores Retirement Center	Annually-July
TP4 (MRT)	725 Rasmussen Ct	Annually-July

No information needed here

Attach a distribution map with sample locations

Reduced Monitoring

To qualify for reduced monitoring the following criteria must be met (and State must approve)
TTHM RAA < 0.040 mg/l AND HAA5 RAA < 0.030 mg/l for two consecutive years
Monitoring may then be reduced to 1 sample per treatment plant per year
during month of warmest water temperature

Coliform Monitoring Sample Sites

No.	Pressure Zone	Routine Sample Site	Repeat Sample Sites	
			Upstream	Downstream
1	East High	LDS Church, 2138 Mesford St.	19225 23rd Ave.	2111 Mesford St.
2	East High	NK School Admin. 18360 Caldart Ave.	18400 Caldart Ave	Raab Park 18349 Caldart Ave
3	East High	North Point 1779 Hostmark	middle school 2003 Hostmark	NK High School. 1780 Hostmark
4	East High	Alasund Meadows 19953 Kevos Pnd Dr	2692 Kevos Pnd Dr	19951 Noll RD
5	Middle	City Cemetery, Caldart Ave.	19880 Mosjon Circle	1515 Nordic Place
6	Middle	Olympic Place I at 1040 Hostmark St.	18771 11th Ave.	1050 Hostmark
7	Middle	19472 Powder Hill	Emeritus 1250 Linclon	19245 10th ave.
8	Middle	St Olaf Church 18943 Caldart Ave	18825 Caldart Ave	19201 Caldart Ave
9	Lower	Creekside Bldg. at 19917 7th Ave.	19880 7th Ave.	19950 7th Ave.
10	Lower	200 Moe	19032 Jensen	18970 3rd Ave
11	Lower	Lindvig Lift Station at 20201 Front St.	225 Lindvig Way NW	19781 Front St. NE
12	Lower	Red Apple 20441 Viking Ave.	20377 Viking Ave.	20487 Viking Ave.
13	Lower	M&M Market 1020 Forest Rock LN	20350 Little Valley RD	1016 Forest Rock Ln
14	Lower	Liberty Bay Marina 17791 Fjord Dr	17749 Fjord Dr	Oyster Plant Park
15	Lower	Liberty Shores 19360 Viking Ave>	19467 Viking	19410 Viking
16	West High	21505 Market Place	21599 Market PL	21200 Olhava Way
17	West High	21553 Olhava Way	21505 Market Place	21599 Market Pl.
18	West High	Stendahl Park	709 Rasmussen Ct	701 Rasmussen Ct

Column Descriptions

Pressure Zone - Enter High, Middle, or Low for the City's three different pressure zones
Routine Sample Site - Enter address of routine sampling location
Repeat Sample Sites - Enter address of one sample site within 5 service connections upstream and address of one sample site within 5 service connections downstream of routine sample site.

Water Quality Monitoring Schedule

System: POULSBO, CITY OF
Contact: KEITH A SVARTHUMLE

PWS ID: 69150 6
Group: A - Comm

Region: SOUTHWEST
County: KITSAP

NOTE: To receive credit for compliance samples, you must fill out laboratory and sample paperwork completely, send your samples to a laboratory accredited by Washington State to conduct the analyses, AND ensure the results are submitted to DOH Office of Drinking Water. There is often a lag time between when you collect your sample, when we credit your system with meeting the monitoring requirement, and when we generate the new monitoring requirement.

Coliform Monitoring Requirements

	Jul 2014	Aug 2014	Sep 2014	Oct 2014	Nov 2014	Dec 2014	Jan 2015	Feb 2015	Mar 2015	Apr 2015	May 2015	Jun 2015
Coliform Monitoring Population	10940	10940	13840	13840	13840	13840	13840	13840	13840	13840	13840	10940
Number of Routine Samples Required	10	10	15	15	15	15	15	15	15	15	15	10

- Collect samples from representative points throughout the distribution system.
- Collect required repeat samples following an unsatisfactory sample. In addition, collect a sample from each operating groundwater source.
- Collect no less than 5 routine samples in the month following one or more unsatisfactory samples, in accordance with your system's Coliform Monitoring Plan.
- For systems that chlorinate, record chlorine residual (measured when the coliform sample is collected) on the coliform lab slip.

Chemical Monitoring Requirements

Distribution Monitoring

Test Panel/Analyte	# Samples Required	Compliance Period	Frequency	Last Sample Date	Next Sample Due
Lead and Copper	30	Jan 2013 - Dec 2015	standard - 3 year	08/22/2012	Aug 2015
Total Trihalomethane (THM)	4	Apr 2014 - Jun 2014	Initial - Quarterly	07/29/2013	***Apr 2014***
Total Trihalomethane (THM)	4	Jul 2014 - Sep 2014	Initial - Quarterly	07/29/2013	***Jul 2014***
Total Trihalomethane (THM)	4	Oct 2014 - Dec 2014	Initial - Quarterly	07/29/2013	***Oct 2014***
Halo-Acetic Acids (HAA5)	4	Apr 2014 - Jun 2014	Initial - Quarterly	07/29/2013	***Apr 2014***
Halo-Acetic Acids (HAA5)	4	Jul 2014 - Sep 2014	Initial - Quarterly	07/29/2013	***Jul 2014***
Halo-Acetic Acids (HAA5)	4	Oct 2014 - Dec 2014	Initial - Quarterly	07/29/2013	***Oct 2014***

Notes on Distribution System Chemical Monitoring

For *Lead and Copper*:
- Collect samples from indoor faucets after the water has sat unused in the pipes for at least 6 hours, but no more than 12 hours.
- Flush sample faucets with cold water the evening prior to collecting the sample.
- If your sampling frequency is annual or once every 3 years, collect samples between June 1 and September 30.

For *Disinfection Byproducts (HAA5 and THM):* Collect the samples at the locations identified in your Disinfection Byproducts (DBP) monitoring plan.

Source Monitoring

- Collect 'source' chemical monitoring samples from a tap after all treatment (if any), but before entering the distribution system.
- Washington State grants monitoring waivers for various test panels or analytes. Please note that we may require some monitoring as a condition of some waivers. We have granted complete waivers for dioxin, endothal, glyphosate, diquat, and insecticides.
- If "R&C" is listed in a monitoring requirement's frequency, the requirements are based on detections which are reliably and consistently below the health standard.

Source S02 LINCOLN WELL AAB481 Well Use - Permanent Susceptility - Low

Test Panel/Analyte	# Samples Required	Compliance Period	Frequency	Last Sample Date	Next Sample Due
Nitrate	1	Jan 2014 - Dec 2014	standard - 1 year	10/10/2013	***Oct 2014***
Complete Inorganic (IOC)	1	Jan 2011 - Dec 2019	waiver - 9 year	09/20/2010	Sep 2019
Volatile Organics (VOC)	1	Jan 2014 - Dec 2019	waiver - 6 year	10/10/2013	Oct 2019
Herbicides	1	Jan 2014 - Dec 2022	waiver - 9 year	04/22/2009	Apr 2021
Pesticides	1	Jan 2014 - Dec 2022	waiver - 9 year	04/22/2009	Apr 2021
Soil Fumigants	0	Jan 2014 - Dec 2016	waiver - 3 year		
Gross alpha	1	Jan 2014 - Dec 2019	standard - 6 year	10/07/2009	Oct 2015
Radium 228	1	Jan 2014 - Dec 2019	standard - 6 year	10/07/2009	Oct 2015

Source S04	*BIG VALLEY USGS 1 AAB254*	*Well*	*Use - Permanent*	*Susceptility - Moderate*	
Test Panel/Analyte	*# Samples Required*	*Compliance Period*	*Frequency*	*Last Sample Date*	*Next Sample Due*
Nitrate	1	Jan 2014 - Dec 2014	standard - 1 year	10/10/2013	***Oct 2014***
Complete Inorganic (IOC)	1	Jan 2011 - Dec 2019	waiver - 9 year	09/20/2010	Sep 2019
Volatile Organics (VOC)	1	Jan 2014 - Dec 2019	waiver - 6 year	06/11/2012	Jun 2018
Herbicides	1	Jan 2014 - Dec 2022	waiver - 9 year	04/22/2009	Apr 2018
Pesticides	1	Jan 2014 - Dec 2022	waiver - 9 year	04/22/2009	Apr 2018
Soil Fumigants	0	Jan 2014 - Dec 2016	waiver - 3 year		
Gross alpha	1	Jan 2014 - Dec 2019	standard - 6 year	10/07/2009	Oct 2015
Radium 228	1	Jan 2014 - Dec 2019	standard - 6 year	10/07/2009	Oct 2015

Source S05	*PUGH WELL AAB482*	*Well*	*Use - Permanent*	*Susceptility - Moderate*	
Test Panel/Analyte	*# Samples Required*	*Compliance Period*	*Frequency*	*Last Sample Date*	*Next Sample Due*
Nitrate	1	Jan 2014 - Dec 2014	standard - 1 year	10/10/2013	***Oct 2014***
Complete Inorganic (IOC)	1	Jan 2011 - Dec 2019	waiver - 9 year	09/20/2010	Sep 2019
Volatile Organics (VOC)	1	Jan 2014 - Dec 2019	waiver - 6 year	04/10/2012	Apr 2018
Herbicides	1	Jan 2014 - Dec 2022	waiver - 9 year	04/22/2009	Apr 2018
Pesticides	1	Jan 2014 - Dec 2022	waiver - 9 year	04/22/2009	Apr 2018
Soil Fumigants	0	Jan 2014 - Dec 2016	waiver - 3 year		
Gross alpha	1	Jan 2014 - Dec 2016	Initial - 3 Year	10/07/2009	Oct 2015
Radium 228	1	Jan 2014 - Dec 2019	standard - 6 year	10/07/2009	Oct 2015

Source S06	*BIG VALLEY #2 AAC682*	*Well*	*Use - Permanent*	*Susceptility - Low*	
Test Panel/Analyte	*# Samples Required*	*Compliance Period*	*Frequency*	*Last Sample Date*	*Next Sample Due*
Nitrate	1	Jan 2014 - Dec 2014	standard - 1 year	10/10/2013	***Oct 2014***
Complete Inorganic (IOC)	1	Jan 2011 - Dec 2019	waiver - 9 year	09/20/2010	Sep 2019
Volatile Organics (VOC)	1	Jan 2014 - Dec 2019	waiver - 6 year	07/10/2012	Jul 2018
Herbicides	1	Jan 2014 - Dec 2022	waiver - 9 year	04/30/2012	Apr 2021
Pesticides	1	Jan 2014 - Dec 2022	waiver - 9 year	04/10/2012	Apr 2021
Soil Fumigants	0	Jan 2014 - Dec 2016	waiver - 3 year		

Source S06	*BIG VALLEY #2 AAC682*	*Well*	*Use - Permanent*	*Susceptility - Low*	
Test Panel/Analyte	*# Samples Required*	*Compliance Period*	*Frequency*	*Last Sample Date*	*Next Sample Due*
Gross alpha	1	Jan 2014 - Dec 2016	Initial - 3 Year	10/07/2009	Oct 2015
Radium 228	1	Jan 2014 - Dec 2019	standard - 6 year	10/07/2009	Oct 2015

Source S07	*FINN HILL/NIKE WELL AAB480*	*Well*	*Use - Permanent*	*Susceptility - Low*	
Test Panel/Analyte	*# Samples Required*	*Compliance Period*	*Frequency*	*Last Sample Date*	*Next Sample Due*
Nitrate	1	Jan 2014 - Dec 2014	standard - 1 year	07/25/2013	***Jul 2014***
Complete Inorganic (IOC)	1	Jan 2011 - Dec 2019	waiver - 9 year	07/02/2010	Jul 2019
Volatile Organics (VOC)	1	Jan 2014 - Dec 2019	waiver - 6 year	10/18/2012	Oct 2018
Herbicides	1	Jan 2014 - Dec 2016	standard - 3 year	04/30/2012	Mar 2015
Herbicides	1	Jan 2014 - Dec 2016	standard - 3 year	04/30/2012	Oct 2016
Pesticides	1	Jan 2014 - Dec 2016	standard - 3 year	06/06/2012	Mar 2015
Pesticides	1	Jan 2014 - Dec 2016	standard - 3 year	06/06/2012	Oct 2016
Soil Fumigants	0	Jan 2014 - Dec 2016	waiver - 3 year		
Gross alpha	1	Jan 2014 - Dec 2019	standard - 6 year	05/04/2010	May 2016
Radium 228	1	Jan 2014 - Dec 2019	standard - 6 year	10/07/2009	May 2016

Source S08	*WESTSIDE WELL AEC928*	*Well*	*Use - Permanent*	*Susceptility - Low*	
Test Panel/Analyte	*# Samples Required*	*Compliance Period*	*Frequency*	*Last Sample Date*	*Next Sample Due*
Nitrate	1	Jan 2014 - Dec 2014	standard - 1 year	10/10/2013	***Oct 2014***
Complete Inorganic (IOC)	1	Jan 2011 - Dec 2019	waiver - 9 year	07/25/2013	
Fluoride	1	Jan 2014 - Mar 2014	increased - quarterly	07/26/2013	***Mar 2014***
Fluoride	1	Apr 2014 - Jun 2014	increased - quarterly	07/26/2013	***Jun 2014***
Fluoride	1	Jul 2014 - Sep 2014	increased - quarterly	07/26/2013	***Sep 2014***
Volatile Organics (VOC)	1	Jan 2014 - Dec 2019	waiver - 6 year	04/10/2012	Apr 2018
Herbicides	1	Jan 2014 - Dec 2022	waiver - 9 year	07/14/2008	Jul 2017
Pesticides	1	Jan 2014 - Dec 2022	waiver - 9 year	07/14/2008	Jul 2017
Soil Fumigants	0	Jan 2014 - Dec 2016	waiver - 3 year		
Gross alpha	1	Jan 2014 - Dec 2019	standard - 6 year	06/09/2009	Jun 2015

Source S08	WESTSIDE WELL AEC928	Well	Use - Permanent	Susceptility - Low	
Test Panel/Analyte	# Samples Required	Compliance Period	Frequency	Last Sample Date	Next Sample Due
Radium 228	1	Jan 2014 - Dec 2019	standard - 6 year	10/21/2010	Jun 2015

Other Information

Other Reporting Schedules	Due Date
Measure chlorine residuals and submit monthly reports if your system uses continuous chlorination:	monthly
Submit Consumer Confidence Report (CCR) to customers and ODW (Community systems only):	07/01/2014
Submit CCR certification form to ODW (Community systems only):	10/01/2014
Submit Water Use Efficiency report online to ODW (Community and other municipal water systems only):	07/01/2014
Send notices of lead and copper sample results to the customers sampled:	30 days after you receive the laboratory results
Submit Certification of customer notification of lead and copper results to ODW:	90 days after end of monitoring period

Special Notes

None

Southwest Regional Water Quality Monitoring Contacts

For questions regarding chemical monitoring:	Sophia Petro: (360) 236-3046 or sophia.petro@doh.wa.gov
For questions regarding DBPs:	Regina Grimm, p.e.: (360) 236-3035 or regina.grimm@doh.wa.gov
For questions regarding coliform bacteria and microbial issues:	Sandy Brentlinger: (360) 236-3044 or sandy.brentlinger@doh.wa.gov

Additional Notes

The information on this monitoring schedule is valid as of the date in the upper left corner on the first page. However, the information may change with subsequent updates in our water quality monitoring database as we receive new data or revise monitoring schedules. There is often a lag time between when you collect your sample and when we credit your system with meeting the monitoring requirement.

We have not designed this monitoring schedule to display all compliance requirements. The purpose of this schedule is to assist water systems with planning for most water quality monitoring, and to allow systems to compare their records with DOH ODW records. Please be aware that this monitoring schedule does not include constituents that require a special monitoring frequency, such as monitoring affiliated with treatment.

Any inaccuracies on this schedule will not relieve the water system owner and operator of the requirement to comply with applicable regulations.

If you have any questions about your monitoring requirements, please contact the regional office staff listed above.

Washington State Department of Health
Division of Environmental Health
Office of Drinking Water

PUBLIC NOTICE CERTIFICATION
Acute Coliform MCL

Within 10 days of notifying your customers, you must send a copy of each type of notice you distribute (hand-delivered notices, press releases, newspaper articles, etc.) to our regional office. Also, complete and send this form, which certifies that you have met all the public notification requirements. If the boil water advisory remains in effect more than three months, you must notify your water users again and provide another Public Notice Certification to us. *With this certification, you are also stating that you will meet future requirements for notifying new billing units of the violation or situation.*

Water System:_____ID #_____County:_____

Violation Date:_____ / _____ / _____ Violation Type:_____

This public water system certifies that public notice has been given to water users, following state and federal requirements for delivery, content, and deadlines.

Complete the following items:

Yes No

☐ ☐ Distribution was completed on ___ / ___ /____. Check all that apply:
- ☐ Hand delivery,
- ☐ Press release (TV, radio, newspaper, etc.),
- ☐ Posting at_____ (by DOH approval only),
- ☐ Other _____ (by DOH approval only).

☐ ☐ Were the water users notified within 24 hours?

_____ _____ _____
Signature of owner or operator Position Date

If you need this publication in an alternate format, call (800) 525-0127 or for TTY/TDD call (877) 833-6341.

Northwest Regional Office:
20425 72nd Ave S Suite 310
Kent WA 98032
(253) 395-6775
Fax: (253) 395-6760

Southwest Regional Office:
PO Box 47823
Olympia WA 98504-7823
(360) 236-3030
Fax (360) 664-8058

Eastern Regional Office:
16201 E Indiana Ave Suite 1500
Spokane Valley WA 99216
(509) 329-2100
Fax: (509) 329-2104

APPENDIX G

WATER USE ORDINANCES
AND SEPA DOCUMENTATION

Chapter 13.12
SPRINKLER REGULATIONS

Sections:

13.12.010 Hours permitted.
13.12.020 Exceptions granted by city council.
13.12.030 Violation—Penalty.

13.12.010 Hours permitted.

No person connected to the city water system shall knowingly use water for lawn or garden sprinkling or irrigation purposes on any premises at any time except between the hours of six a.m. and ten a.m. in the morning and six p.m. and ten p.m. in the evening. (Ord. 82-27 § 1, 1982)

13.12.020 Exceptions granted by city council.

The city council may grant specific sprinkling hours other than provided in Section 13.12.010 where necessary because of a valid commercial activity, undue hardship or for the benefit of the water system. (Ord. 82-27 § 2, 1982)

13.12.030 Violation—Penalty.

Any person violating any of the provisions of this chapter is guilty of a misdemeanor and upon conviction thereof shall be subject to a fine of not more than one hundred dollars or to imprisonment in the city jail for not more than thirty days, or by both such fine and imprisonment. (Ord. 82-27 § 3, 1982)

Mobile Version

SEPA ENVIRONMENTAL CHECKLIST

UPDATED 2014

Purpose of checklist:

Governmental agencies use this checklist to help determine whether the environmental impacts of your proposal are significant. This information is also helpful to determine if available avoidance, minimization or compensatory mitigation measures will address the probable significant impacts or if an environmental impact statement will be prepared to further analyze the proposal.

Instructions for applicants: [help]

This environmental checklist asks you to describe some basic information about your proposal. Please answer each question accurately and carefully, to the best of your knowledge. You may need to consult with an agency specialist or private consultant for some questions. You may use "not applicable" or "does not apply" only when you can explain why it does not apply and not when the answer is unknown. You may also attach or incorporate by reference additional studies reports. Complete and accurate answers to these questions often avoid delays with the SEPA process as well as later in the decision-making process.

The checklist questions apply to all parts of your proposal, even if you plan to do them over a period of time or on different parcels of land. Attach any additional information that will help describe your proposal or its environmental effects. The agency to which you submit this checklist may ask you to explain your answers or provide additional information reasonably related to determining if there may be significant adverse impact.

Instructions for Lead Agencies:

Please adjust the format of this template as needed. Additional information may be necessary to evaluate the existing environment, all interrelated aspects of the proposal and an analysis of adverse impacts. The checklist is considered the first but not necessarily the only source of information needed to make an adequate threshold determination. Once a threshold determination is made, the lead agency is responsible for the completeness and accuracy of the checklist and other supporting documents.

Use of checklist for nonproject proposals: [help]

For nonproject proposals (such as ordinances, regulations, plans and programs), complete the applicable parts of sections A and B plus the SUPPLEMENTAL SHEET FOR NONPROJECT ACTIONS (part D). Please completely answer all questions that apply and note that the words "project," "applicant," and "property or site" should be read as "proposal," "proponent," and "affected geographic area," respectively. The lead agency may exclude (for non-projects) questions in Part B - Environmental Elements –that do not contribute meaningfully to the analysis of the proposal.

A. background [help]

1. Name of proposed project, if applicable: [help]

   City of Poulsbo Water System Plan (Plan)

2. Name of applicant: [help]

   City of Poulsbo

eviewed 9/8/14 by Karla Boughton, Assoc. Planner

3. Address and phone number of applicant and contact person: [help]

Attn: Diane Lenius, Assitant City Engineer
200 NE Moe St
Poulsbo, WA 98370
(360) 779-4078

4. Date checklist prepared: [help]

August 14, 2014

5. Agency requesting checklist: [help]

Washington State Department of Health

6. Proposed timing or schedule (including phasing, if applicable): [help]

The plan provides a schedule of improvements identified for construction for the 6-year (2020) and 20-year (2034) planning periods.
2035

7. Do you have any plans for future additions, expansion, or further activity related to or connected with this proposal? If yes, explain. [help]

No. This proposal is the result of a Water System Plan. Capital improvement projects are described in the Plan and individual SEPA checklists will be prepared for each project as necessary.

8. List any environmental information you know about that has been prepared, or will be prepared, directly related to this proposal. [help]

Projects scheduled for construction will have a SEPA review at the time of construction, unless it is determined that the project is SEPA exempt.

9. Do you know whether applications are pending for governmental approvals of other proposals directly affecting the property covered by your proposal? If yes, explain. [help]

No. The Water System Plan will also be included into the Citys Comprehensive Plan Capital Facilities Plan as an amendment anticipated for 2015 and as a separate process. KB

10. List any government approvals or permits that will be needed for your proposal, if known. [help]

The Plan requires approval of the Department of Health and Department of Ecology. The Plan will also be distributed to Kitsap County, Kitsap County Public Utilities District No. 1, Skookum Ranch Water System, and Viewside Community Water System.

11. Give brief, complete description of your proposal, including the proposed uses and the size of the project and site. There are several questions later in this checklist that ask you to describe certain aspects of your proposal. You do not need to repeat those answers on this

The City will utilize the provisions of phased environmental review, as allowed by WAC 197-11-060. Future development proposals are subject to additional environmental review. (KB)

page. (Lead agencies may modify this form to include additional specific information on project description.) [help]

The Plan is a planning document describing and evaluating the City's water system and providing a list of capital projects necessary to provide water service through 2034. It is used as a resource by City staff, City Council, and state regulatory agencies. The Plan describes management, standards, policies, service area, geography, quality, infrastructure, operations, and finance of the City's water utility. ✓

12. Location of the proposal. Give sufficient information for a person to understand the precise location of your proposed project, including a street address, if any, and section, township, and range, if known. If a proposal would occur over a range of area, provide the range or boundaries of the site(s). Provide a legal description, site plan, vicinity map, and topographic map, if reasonably available. While you should submit any plans required by the agency, you are not required to duplicate maps or detailed plans submitted with any permit applications related to this checklist. [help]

The project area includes the City's water service area as shown on Figure 1-2. city limits of Poulsbo. (KB)

B. ENVIRONMENTAL ELEMENTS [help]

1. Earth

a. General description of the site [help]
(circle one): hilly, flat, hilly topography in city limits varies. (KB)

b. What is the steepest slope on the site (approximate percent slope)? [help]

Slopes within the water service area exceed 30 percent, however, the area being served is the more urbanized area.

Slopes exceeding 40% & potential geohazards areas are mapped in City's CAO maps. (KB)

c. What general types of soils are found on the site (for example, clay, sand, gravel, peat, muck)? If you know the classification of agricultural soils, specify them and note any agricultural land of long-term commercial significance and whether the proposal results in removing any of these soils. [help] ✓

Soils will be considered on a project specific basis.

d. Are there surface indications or history of unstable soils in the immediate vicinity? If so, describe. [help]

unstable soils & slopes are regulated by the City's Critical Areas Ordinance. Will be evaluated on a project specific basis. (KB)

The steep slopes in some areas are subject to instability during seismic activity. Slope stability will be determined on a project specific basis.

e. Describe the purpose, type, total area, and approximate quantities and total affected area of any filling, excavation, and grading proposed. Indicate source of fill. [help]

No filling or grading will occur at this time. Grading and fill quantities will be developed along with permits and approvals for specific projects. ✓

f. Could erosion occur as a result of clearing, construction, or use? If so, generally describe. [help]

Erosion during construction is anticipated. The construction plans and specifications will address erosion control measures to minimize potential impacts to surface waters. consistent with City ordinances & requirements. (KB)

g. About what percent of the site will be covered with impervious surfaces after project construction (for example, asphalt or buildings)? [help]

This will be determined on a project specific basis.

h. Proposed measures to reduce or control erosion, or other impacts to the earth, if any: [help]

Stormwater best management practices (BMPs) will be employed for each project. An erosion control plan will be developed for each project and approved prior to construction.

2. Air

a. What types of emissions to the air would result from the proposal during construction, operation, and maintenance when the project is completed? If any, generally describe and give approximate quantities if known. [help]

Exhaust from equipment and dust will be the primary sources of emissions during the construction of proposed projects. Construction impacts will be localized and temporary.

b. Are there any off-site sources of emissions or odor that may affect your proposal? If so, generally describe. [help]

This will be determined on a project specific basis.

c. Proposed measures to reduce or control emissions or other impacts to air, if any: [help]

Dust suppression measures and minimization of vehicle idling will be implemented during construction projects.

3. Water

a. Surface Water: [help]

1) Is there any surface water body on or in the immediate vicinity of the site (including year-round and seasonal streams, saltwater, lakes, ponds, wetlands)? If yes, describe type
and provide names. If appropriate, state what stream or river it flows into. [help]

numerous streams & wetlands

Dogfish Creek and ~~an unnamed creek (0286)~~ are all within the border of the service area. The service area also abuts the shores of Liberty Bay.

These are mapped in the City's CAO stream, wetland, & Fish & Wildlife Habitat Conservation Area maps. (KB)

2) Will the project require any work over, in, or adjacent to (within 200 feet) the described waters? If yes, please describe and attach available plans. [help]

This will be determined on a project specific basis.

3) Estimate the amount of fill and dredge material that would be placed in or removed from surface water or wetlands and indicate the area of the site that would be affected. Indicate the source of fill material. [help]

This will be determined on a project specific basis.

4) Will the proposal require surface water withdrawals or diversions? Give general description, purpose, and approximate quantities if known. [help]

This will be determined on a project specific basis.

5) Does the proposal lie within a 100-year floodplain? If so, note location on the site plan. [help]

Portions of the water service area lie within the 100-year flood plain.

6) Does the proposal involve any discharges of waste materials to surface waters? If so, describe the type of waste and anticipated volume of discharge. [help]

No discharge of waste materials into surface waters will occur as a result of the Plan issuance.

b. Ground Water:

1) Will groundwater be withdrawn from a well for drinking water or other purposes? If so, give a general description of the well, proposed uses and approximate quantities withdrawn from the well. Will water be discharged to groundwater? Give general description, purpose, and approximate quantities if known. [help]

This will be determined on a project specific basis. The draft water system plan identifies the City's wells & discusses existing conditions & any necessary improvements. The capacity is also identified in section 7.

2) Describe waste material that will be discharged into the ground from septic tanks or other sources, if any (for example: Domestic sewage; industrial, containing the following chemicals. . . ; agricultural; etc.). Describe the general size of the system, the number of such systems, the number of houses to be served (if applicable), or the number of animals or humans the system(s) are expected to serve. [help]

Not applicable.

c. Water runoff (including stormwater):

1) Describe the source of runoff (including storm water) and method of collection and disposal, if any (include quantities, if known). Where will this water flow? Will this water flow into other waters? If so, describe. [help]

This will be determined on a project specific basis.

2) Could waste materials enter ground or surface waters? If so, generally describe. [help]

This will be determined on a project specific basis.

3) Does the proposal alter or otherwise affect drainage patterns in the vicinity of the site? If so, describe.

This will be determined on a project specific basis.

d. Proposed measures to reduce or control surface, ground, and runoff water, and drainage pattern impacts, if any:

This will be determined on a project specific basis. Compliance with the City's adopted storm water management regulations & critical areas ordinance. (KB)

4. **Plants** [help]

a. Check the types of vegetation found on the site: [help]

__X__deciduous tree: alder, maple, aspen, other
__X__evergreen tree: fir, cedar, pine, other
__X__shrubs
__X__grass
____pasture
____crop or grain
____ Orchards, vineyards or other permanent crops.
__X__ wet soil plants: cattail, buttercup, bullrush, skunk cabbage, other
__X__water plants: water lily, eelgrass, milfoil, other
__X__other types of vegetation

b. What kind and amount of vegetation will be removed or altered? [help]

This will be determined on a project specific basis.

c. List threatened and endangered species known to be on or near the site. [help]

None known. Determined will be made at the time specific proposals move forward. (KB)

d. Proposed landscaping, use of native plants, or other measures to preserve or enhance vegetation on the site, if any: [help]

Revegetation will be required for each project proposed in the Plan.

Landscaping is usually required for new development (KB)

e. List all noxious weeds and invasive species known to be on or near the site.

None known.

5. **Animals**

a. List any birds and other animals which have been observed on or near the site or are known to be on or near the site. Examples include: [help]

birds: hawk, heron, eagle, songbirds, other:
mammals: deer, bear, elk, beaver, other:
fish: bass, salmon, trout, herring, shellfish, other _____

Animals are site dependent but may include all animals listed above..

b. List any threatened and endangered species known to be on or near the site. [help]

Puget Sound steelhead, Marbled Murrelet, Puget Sound Chinook Salmon, Yellow-Eye Rockfish, and the Bull trout are listed as threatened and may be present in areas near the City.The Puget Sound southern resident Orca whale has critical habitat that includes Liberty Bay. The Bocaccio is listed as endangered.

c. Is the site part of a migration route? If so, explain. [help]

The site is located within the Pacific Flyway, a regional migratory bird route that includes much of Western Washington.

d. Proposed measures to preserve or enhance wildlife, if any: [help]

This will be determined on a project specific basis. Individual SEPA review will be performed on each project, as required. The City's CAO provides protection for wildlife. Any additional mitigation necessary will be identified at the time of site specific development review. (KS)

e. List any invasive animal species known to be on or near the site.

None known.

6. **Energy and natural resources**

a. What kinds of energy (electric, natural gas, oil, wood stove, solar) will be used to meet the completed project's energy needs? Describe whether it will be used for heating, manufacturing, etc. [help]

Fuel and lubricant will be consumed by machinery during construction.

b. Would your project affect the potential use of solar energy by adjacent properties? If so, generally describe. [help]

No.

c. What kinds of energy conservation features are included in the plans of this proposal? List other proposed measures to reduce or control energy impacts, if any: [help]

Not applicable. Future development will meet the current energy code as identified in The International Building code. (KB)

7. **Environmental health**

a. Are there any environmental health hazards, including exposure to toxic chemicals, risk of fire and explosion, spill, or hazardous waste, that could occur as a result of this proposal? If so, describe. [help]

This will be determined on a project specific basis.

1) Describe any known or possible contamination at the site from present or past uses.

This will be determined on a project specific basis.

2) Describe existing hazardous chemicals/conditions that might affect project development and design. This includes underground hazardous liquid and gas transmission pipelines located within the project area and in the vicinity.

None know.

3) Describe any toxic or hazardous chemicals that might be stored, used, or produced during the project's development or construction, or at any time during the operating life of the project.

None known.

4) Describe special emergency services that might be required.

None required

5) Proposed measures to reduce or control environmental health hazards, if any:

Compliance with industrial safety standards in design, construction, and operation of facilities.

b. **Noise**

1) What types of noise exist in the area which may affect your project (for example: traffic, equipment, operation, other)? [help]

None. The City has a typical level of noise expected in an urban environment. (KB)

2) What types and levels of noise would be created by or associated with the project on a short-term or a long-term basis (for example: traffic, construction, operation, other)? Indicate what hours noise would come from the site. [help]

During construction of proposed projects, noise from equipment will be generated at the project site.

3) Proposed measures to reduce or control noise impacts, if any: [help]
This will be determined on a project specific basis. Construction equipment working times will be limited to daylight hours. Hauling to and from the facility would be limited to normal work hours, Monday through Friday.

8. **Land and shoreline use**

a. What is the current use of the site and adjacent properties? Will the proposal affect current land uses on nearby or adjacent properties? If so, describe. [help]

Land use in the area is a mixture of residential, commercial, industrial, and public facilities. Pipeline work will be located within public rights-of-way and easements. This proposal will not affect current land uses on or nearby adjacent properties.

b. Has the project site been used as working farmlands or working forest lands? If so, describe. How much agricultural or forest land of long-term commercial significance will be converted to other uses as a result of the proposal, if any? If resource lands have not been designated, how many acres in farmland or forest land tax status will be converted to nonfarm or nonforest use? [help]

No. No land known will be converted. None.

1) Will the proposal affect or be affected by surrounding working farm or forest land normal business operations, such as oversize equipment access, the application of pesticides, tilling, and harvesting? If so, how:

No.

c. Describe any structures on the site. [help]

Not applicable.

d. Will any structures be demolished? If so, what? [help]

This will be determined on a project specific basis.

e. What is the current zoning classification of the site? [help]

Note: unincorporated areas in Poulsbo UGA (KB)

Zoning classifications are established by the City of Poulsbo and ~~Kitsap~~ County and are a mixture of single family, multi-family, commercial, industrial and public use.

Determination of zoning classification & applicable review requirements will be made at the time specific proposals move forward. (KB)

f. What is the current comprehensive plan designation of the site? [help]

The current comprehensive plan designations are consistent with the zoning classifications in the area.

Determination of comprehensive plan designations will be made at the time specific projects move forward. (KB)

g. If applicable, what is the current shoreline master program designation of the site? [help]

Not applicable. Determination of shoreline designation & applicable review requirements will be made at the time specific proposals move forward. (KB)

h. Has any part of the site been classified as a critical area by the city or county? If so, specify. [help]

Shorelines and waters of Liberty Bay and the streams and wetlands draining the City.

Identification of critical areas will be made at the time specific proposals move forward. (KB)

i. Approximately how many people would reside or work in the completed project? [help]

Approximately 10,000 people live within the water service area.

j. Approximately how many people would the completed project displace? [help]

None.

k. Proposed measures to avoid or reduce displacement impacts, if any: [help]

Not applicable.

L. Proposed measures to ensure the proposal is compatible with existing and projected land uses and plans, if any: [help]

This will be determined on a project specific basis.

m. Proposed measures to ensure the proposal is compatible with nearby agricultural and forest lands of long-term commercial significance, if any:

This will be determined on a project specific basis.

9. Housing

a. Approximately how many units would be provided, if any? Indicate whether high, middle, or low-income housing. [help]

Not applicable.

b. Approximately how many units, if any, would be eliminated? Indicate whether high, middle, or low-income housing. [help]

Not applicable.

c. Proposed measures to reduce or control housing impacts, if any: [help]

Not applicable.

10. Aesthetics

a. What is the tallest height of any proposed structure(s), not including antennas; what is the principal exterior building material(s) proposed? [help]

This will be determined on a project specific basis.

b. What views in the immediate vicinity would be altered or obstructed? [help]

None.

c. Proposed measures to reduce or control aesthetic impacts, if any: [help]

This will be determined on a project specific basis.

11. **Light and glare**

a. What type of light or glare will the proposal produce? What time of day would it mainly occur? [help]

Not applicable.

b. Could light or glare from the finished project be a safety hazard or interfere with views? [help]

Not applicable.

c. What existing off-site sources of light or glare may affect your proposal? [help]

Not applicable.

d. Proposed measures to reduce or control light and glare impacts, if any: [help]

Not applicable.

12. **Recreation**

a. What designated and informal recreational opportunities are in the immediate vicinity? [help]

This will be determined on a project specific basis.

b. Would the proposed project displace any existing recreational uses? If so, describe. [help]

This will be determined on a project specific basis.

c. Proposed measures to reduce or control impacts on recreation, including recreation opportunities to be provided by the project or applicant, if any: [help]

This will be determined on a project specific basis.

13. **Historic and cultural preservation**

a. Are there any buildings, structures, or sites, located on or near the site that are over 45 years old listed in or eligible for listing in national, state, or local preservation registers located on or near the site? If so, specifically describe. [help]

This will be determined on a project specific basis.

b. Are there any landmarks, features, or other evidence of Indian or historic use or occupation? This may include human burials or old cemeteries. Are there any material evidence, artifacts, or areas of cultural importance on or near the site? Please list any professional studies conducted at the site to identify such resources. [help]

Not applicable.

c. Describe the methods used to assess the potential impacts to cultural and historic resources on or near the project site. Examples include consultation with tribes and the department of archeology and historic preservation, archaeological surveys, historic maps, GIS data, etc. [help]

Not applicable.

d. Proposed measures to avoid, minimize, or compensate for loss, changes to, and disturbance to resources. Please include plans for the above and any permits that may be required.

Not applicable.

14. Transportation

a. Identify public streets and highways serving the site or affected geographic area and describe proposed access to the existing street system. Show on site plans, if any. [help]

Not applicable. Major streets and highways in Poulsbo include SR 3, 305, 307, Viking Avenue, Finn Hill, Front Street, Fjord Drive, Hostmark St., Caldart Ave, Lincoln Road. (KB)

b. Is the site or affected geographic area currently served by public transit? If so, generally describe. If not, what is the approximate distance to the nearest transit stop? [help]

Not applicable. Kitsap Transit provides public transit throughout the City. (KB)

c. How many additional parking spaces would the completed project or non-project proposal have? How many would the project or proposal eliminate? [help]

Not applicable. Determination will be made at the time specific projects move forward. (KB)

d. Will the proposal require any new or improvements to existing roads, streets, pedestrian, bicycle or state transportation facilities, not including driveways? If so, generally describe (indicate whether public or private). [help]

Not applicable. Determination will be made at the time specific projects move forward (KB)

e. Will the project or proposal use (or occur in the immediate vicinity of) water, rail, or air transportation? If so, generally describe. [help]

Not applicable. ✓

f. How many vehicular trips per day would be generated by the completed project or proposal? If known, indicate when peak volumes would occur and what percentage of the volume would be trucks (such as commercial and nonpassenger vehicles). What data or transportation models were used to make these estimates? [help]

Not applicable. Determination will be made at the time specific proposals move forward. (KB)

g. Will the proposal interfere with, affect or be affected by the movement of agricultural and forest products on roads or streets in the area? If so, generally describe.

Not applicable. ✓

h. Proposed measures to reduce or control transportation impacts, if any: [help]

Not applicable. At the time of development review, projects will be reviewed for traffic impacts & appropriate mitigation will be identified. (KB)

15. **Public services**

a. Would the project result in an increased need for public services (for example: fire protection, police protection, public transit, health care, schools, other)? If so, generally describe. [help]

Not applicable. The draft water system plan includes fire flow analysis & needs (KB)

b. Proposed measures to reduce or control direct impacts on public services, if any. [help]

Not applicable. ✓

16. **Utilities**

a. Circle utilities currently available at the site: [help]
electricity, natural gas, water, refuse service, telephone, sanitary sewer, septic system, other, phone cable television ✓

The draft water system plan is ~~an~~ about the City's water utility & is a planning document for the management & future needs of the water utility. (KB)

b. Describe the utilities that are proposed for the project, the utility providing the service, and the general construction activities on the site or in the immediate vicinity which might be needed. [help]

Not applicable.

C. Signature [HELP]

The above answers are true and complete to the best of my knowledge. I understand that the lead agency is relying on them to make its decision.

Signature: [signature]

Name of signee DIANE E. LENIUS

Position and Agency/Organization _____

Date Submitted: _____

D. supplemental sheet for nonproject actions [help]

(**IT IS NOT NECESSARY** to use this sheet for project actions)

Because these questions are very general, it may be helpful to read them in conjunction with the list of the elements of the environment.

When answering these questions, be aware of the extent the proposal, or the types of activities likely to result from the proposal, would affect the item at a greater intensity or at a faster rate than if the proposal were not implemented. Respond briefly and in general
terms.

1. How would the proposal be likely to increase discharge to water; emissions to air; production, storage, or release of toxic or hazardous substances; or production of noise?

   This will be determined on a project specific basis.

   Proposed measures to avoid or reduce such increases are:

   This will be determined on a project specific basis.

2. How would the proposal be likely to affect plants, animals, fish, or marine life?

   This will be determined on a project specific basis.

   Proposed measures to protect or conserve plants, animals, fish, or marine life are:

   This will be determined on a project specific basis.

3. How would the proposal be likely to deplete energy or natural resources?

   Not applicable to Plan issuance.

   Proposed measures to protect or conserve energy and natural resources are:

   Not applicable.

4. How would the proposal be likely to use or affect environmentally sensitive areas or areas designated (or eligible or under study) for governmental protection; such as parks, wilderness, wild and scenic rivers, threatened or endangered species habitat, historic or cultural sites, wetlands, floodplains, or prime farmlands?

Construction of projects identified in the Plan may impact sensitive fish and wildlife habitat, lakes, cultural sites, wetlands, or floodplains. None of the projects identified in the Plan will impact rivers and prime farmland.

Proposed measures to protect such resources or to avoid or reduce impacts are:

This will be determined on a project specific basis.

5. How would the proposal be likely to affect land and shoreline use, including whether it would allow or encourage land or shoreline uses incompatible with existing plans?

Projects included in the Plan may include construction within shoreline areas. Projects will allow the City to better provide water service to existing and future development within the water service area.

Proposed measures to avoid or reduce shoreline and land use impacts are:

Construction best management practices (BMPs) will be evaluated and implemented on a project specific basis.

6. How would the proposal be likely to increase demands on transportation or public services and utilities?

Growth within the City's urban growth area is expected to increase total water supply by 65-percent by 2034.

Proposed measures to reduce or respond to such demand(s) are:

The City's Water Use Efficiency Program identifies how the City plans to reduce the average customer water use. See Chapter 6 of the Plan for details.

7. Identify, if possible, whether the proposal may conflict with local, state, or federal laws or requirements for the protection of the environment.

Projects included in the Plan will provide water service to the City's service area in compliance with local, state, and federal regulations to protect the environment.

CITY OF POULSBO
DETERMINATION OF NONSIGNIFICANCE (DNS)
WAC 197-11-970

Planning File: 2014 Draft City of Poulsbo Water System Plan

Description of proposal: The 2014 Draft City of Poulsbo Water System Plan is a planning document describing and evaluating the City's public water system and providing a list of capital projects necessary to provide water service through a 20-year planning period. The Draft Water System Plan describes management, standards, policies, service area, geography, quality, infrastructure, operations and finance of the City's water utility.

The complete 2014 Draft City of Poulsbo Water System Plan can be found at the following link: http://www.cityofpoulsbo.com/council/documents/DraftWaterSystemPlan8-22.pdf

Lead Agency: City of Poulsbo

The lead agency for this proposal has determined that it does not have a probable significant adverse impact on the environment. An environmental impact statement (EIS) is not required under RCW 43.21C.030(2)(c). This decision was made after review of a completed environmental checklist and other information on file with the lead agency. This information is available to the public on request.

The City is utilizing the provisions of WAC 197-11-060(5) that provides for Phased Review of SEPA – this provides for a broad environmental review of the Draft Water System Plan and project-specific environmental review as development permits are submitted. The improvement projects identified in the Draft Water System's Capital Improvement Plan will likely require development review.

This DNS is issued after using the optional DNS process in WAC 197-11-355. There is no further comment period on the DNS.

Responsible official: Barry Berezowsky
Position/Title: Planning Director
Address: City of Poulsbo **Phone:** (360) 394-9882
200 NE Moe Street
Poulsbo, WA 98370

Date: September 29, 2014 Signature: _____

You may appeal this determination in writing to the responsible official listed above no later than 10 working days from the date of this notice. You should be prepared to make specific factual objections. Contact the responsible official to read or ask about the procedure for SEPA appeals.

APPENDIX H

CROSS-CONNECTION CONTROL PROGRAM

Cross-Connection Control Program

INTRODUCTION

A cross-connection control (CCC) program is a proactive and ongoing effort of a water purveyor to protect the health of its customers by preventing contamination of the municipal water supply that it supplies by preventing backflow of contaminants through cross-connection. A cross-connection is any physical connection, actual or potential, between a water system and any source of non-potable substance. All public water systems in Washington State are required to implement a cross-connection control program. All required elements of a local CCC program must be documented and included in either the Comprehensive Water System Plan (applicable to Poulsbo) or Small Water System Management Program document (not applicable to Poulsbo). The State mandate for CCC program and the required elements of a CCC program are contained in *WAC 246-290-490 Cross-Connection Control*, which became effective in April of 1999. The minimum required elements in a CCC program are as follows:

- An adopted local ordinance, resolution or code that establishes the purveyor's legal authority, describes operating policies and the corrective actions of a CCC program.
- Develop and implement procedures and schedules for evaluating new and existing service connections to assess hazards.
- Develop and implement procedures and schedules that eliminate or control cross-connections and ensure approved backflow preventers are properly installed.
- Ensure that personnel, including one certified Cross-Connection Control Specialist (CCS), are provided to develop and implement the CCC program.
- Develop and implement procedures to ensure approved backflow preventers are properly inspected and tested.
- Develop and implement a backflow prevention assembly testing quality control assurance program.
- Develop and implement procedures for backflow incident response.
- Include cross-connection control program information in customer education materials.
- Develop and maintain CCC program records.
- Meet any additional CCC requirements if reclaimed water is distributed or received in the water service area.

PURPOSE AND SCOPE

This document establishes minimum standards for the City to protect the public water supply from possible contamination from backflow. This document also describes minimum CCC program operating policies, provides guidelines for installation, testing and maintenance of approved backflow devices. In addition, permitting and inspection requirements for existing and new backflow prevention devices are described. The document concludes with recommendations that the City of Poulsbo is advised to address in order to comply with the updated CCC program requirements.

AUTHORITY

The Federal Safe Drinking Water Act of 1974 and the statutes of the State of Washington Title 43 RCW require purveyors to protect the public water systems from contamination. In addition, Washington Administrative Code *WAC 246-290-490* establishes cross-connection control program requirements for the State. In Washington State, the Department of Health (DOH) and the Department of Community, Trade and Economic Development are the lead agencies for the development and administration of the State's cross-connection control program. Finally, the City currently has an adopted cross-connection control program outlined in *Section 13.06.080, Cross-connections and Backflow Devices* of the City's Municipal Code. This code section establishes the City's authority in implementing a cross-connection program and prohibits cross-connections.

RESPONSIBILITY

The City is responsible for protecting its public water supply from contamination, due to backflow of pollutants through water service connections. If the City determines that a backflow prevention device is necessary at a customer's premise, the City will notify the customer to install an approved backflow device on the premise. Installation of said backflow device(s) shall be a condition of continued water service from the City. Upon installation, the customer shall notify the City requesting inspection and testing of said device(s). The customer will be responsible for all applicable testing and inspection fees.

FAILURE TO COMPLY

Any person, firm, or corporation who violates any of the provisions of this document or Poulsbo Municipal Code *13.06.080 Cross-connections and Backflow,* may be punished in accordance with Poulsbo Municipal Code *13.06.080(B).*

Any person, firm or corporation who violates any provisions and requirements of this document shall be subject to discontinuance of supply of City water to the premise. Discontinuance of the City potable supply to the premise shall remain in effect until corrective action, as required by the City, is completed, tested and approved.

CROSS-CONNECTION CONTROL PROGRAM

The City has implemented most of the required elements of the CCC program as listed above. This document will describe the City's current CCC program and will also discuss areas that the City needs to address in order to comply with the new CCC program requirements. The City is committed to protecting the public water supply from contamination by eliminating potential cross-connections. The City's CCC program that follows includes a statement of its goals and objectives, the evaluation of CCC elements, the program implementation schedule, and recommendations.

CCC Program Goals and Objectives

The goals and objectives of the City of Poulsbo Water CCC Program consist of:

- Prevent contamination of the public water supply by eliminating cross-connections.
- Inventory all potential cross-connection hazard areas.
- Establish an inspection and maintenance program for all backflow prevention devices.

The City of Poulsbo will achieve these goals and objectives through the implementation of the CCC program that follows.

Evaluation of CCC Program Elements

The City of Poulsbo is required to develop and implement a cross-connection control program. All required elements of a local CCC program must be documented and included in the City's Comprehensive Water System Plan. The evaluation of these CCC program elements and current level of implementation are presented below.

Cross-Connection Control Ordinance

This CCC program element requires that the purveyor "adopt a local ordinance, resolution, code, bylaw, or other written legal instrument" outlining the purveyor's program. In addition, this document must establish the purveyor's legal authority to implement a CCC program. Operating policies, technical provisions and corrective actions of the CCC program must also be addressed

in the legal document. The City currently has an adopted cross-connection control program as described in *Section 13.06.080, Cross-connections and Backflow Devices* of the City's Municipal Code. This section establishes the City's authority in implementing a cross-connection program and prohibits cross-connections. However, this ordinance was written prior to the new requirements contained in *WAC 246-290*. This document updates the City's CCC program in order to comply with the new *WAC 246-290* requirements. In addition, the American Water Works Association (AWWA) published a manual entitled, "Recommended Practice for Backflow Prevention and Cross-Connection Control (AWWA M14)" that outlines cross-connection control procedures that is recommended by the WAC requirements as a tool for developing a CCC program. This manual specifically lists types of backflow devices that should be used for different premises. Poulsbo's CCC program currently references the AWWA document as part of its program.

The City's Municipal Code will be updated to address the new regulations in WAC 246-290 and the current CCC program contained in this document.

Evaluation of Service Connections

This CCC program element requires that the purveyor develop and implement procedures for evaluating existing and new service connections to assess the risk of connecting the consumer's premises to the City's public water system. This element also requires that the purveyor notify the consumer within a reasonable time frame of the evaluation results. New connections are required to be evaluated prior to service. Existing connections shall be inspected on a schedule acceptable to DOH. The City has an established procedure for evaluating new service connections for potential cross connection. This risk assessment evaluation is performed during the building permit process for new water service applicants. If a backflow device is required as a result of this evaluation, the device, owners name, property address, and other pertinent information is recorded on a list that is filed at the City's Public Works facility. The City has not performed a system-wide risk assessment of all existing service connections.

The City will develop and implement an evaluation program that assesses the risk of existing water service connections. Potential high-risk cross-connection premises will be evaluated first. The City will then evaluate other premises, based on potential risk to the water system and budget availability.

Table 1 lists standard abbreviations for backflow prevention devices. These abbreviations will be used in the tables that follow.

Table 1
Abbreviations

Abbreviation	Description	Level of Protection
AG	Air Gap	1
RPBA	Reduced Pressure Backflow Assembly	2
RPDA	Reduced Pressure Detector Assembly	2
DCVA	Double Check Valve Assembly	3
DCDA	Double Check Detector Assembly	3
PVBA	Pressure Vacuum Breaker Assembly	4
AVB	Atmospheric Vacuum Breaker	5

Table 2 shows typical premises located within a water service area and the appropriate backflow device necessary to prevent contamination to the public water system.

Table 2
Premises Requiring Mandatory Service Protection

Premises	Protection	Premises	Protection
Beverage Bottling Plants	RPBA	Nursing Homes	RPBA
Car Washes	RPBA	Petroleum Processing or Storage Plants	RPBA
Chemical Plants	RPBA	Piers and Docks	RPBA
Fire Sprinkler Services	DCVA	Radioactive Material Processing Plants or Nuclear Reactors	RPBA
Food Processing Plants	DCVA		
Sewage Lift Stations	RPBA	Hospitals, Medical Centers and Clinics	RPBA
Sewage Pump Stations	RPBA	Sewage Treatment Plants	RPBA
Laboratories	RPBA	Tall Buildings (Over 30', Domestic Water)	DCVA
Metal Plating Industries	RPBA	Unapproved Auxiliary Supply	RPBA
Mortuaries	RPBA		

Table 3 shows various facilities and the minimum level of required protection for each facility. **Table 4** lists fixtures, equipment, and areas that have the potential to contaminate the public drinking water system. The table also shows the minimum protection required by the City to prevent such contamination.

Table 3
Facilities Requiring Backflow Protection

Facilities	Protection	Facilities	Protection
Battery Manufacturing or Repair Facilities	RPBA	Film Processing Facilities	RPBA
Boat Marinas	RPBA	Ice Manufacturing Plants	RPBA
Canneries	DCVA	Mobile Home Parks	DCVA
Cold Storage Plants	RPBA	Packing Houses (Slaughter Houses)	RPBA
Commercial Laundries	RPBA	Paper Product Plants	RPBA
Concrete Mixing Plants	DCVA	Parks and Playgrounds	DCVA
Dairies	DCVA	Plasma Centers	RPBA
Dry Cleaners	RPBA	Sand and Gravel Plants	DCVA
Dry Docks	RPBA	Ship Repair Facilities	RPBA
Farms	DCVA	Shopping Centers	DCVA

Table 4
Fixtures, Equipment and Areas with Backflow Potential

Fixtures, Equipment and Areas	Protection	Fixtures, Equipment and Areas	Protection
Air Compressors	DCVA	Laboratory Equipment	RPBA
Air Conditioning Systems	RPBA	Laundry Machines, Commercial	RPBA
Air Washers	RPBA	Lavatories	AVB
Aquarium Make-Up Water	AG/RPBA	Livestock Drinking Tanks	AG/AVB
Aspirators, Medical	AVB	Make-Up Tanks	AG/RPBA
Aspirators, Weedicide/Herbicide/Pesticide	AVB	Mobile Carpet Cleaners	RPBA
Autoclaves	RPBA	Mop Sinks	AVB
Autopsy Tables	RPBA	Outboard Motor Test Tanks	AG/AVB
Baptismal Founts	AG/AVB	Perchlorethylene Reclaim	RPBA
Bathtub, Below Rim Filler	Not Allowed	Pesticide Applicator Trucks	AG/RPBA
Bedpan Washers	AVB	Photo Developing Tanks and Sinks	RPBA
Beverage Dispensers using CO2	RPBA	Photostat Equipment	RPBA
Bidets	AG-Internal	Pipette Washers	AVB
Boat Lifts	RPBA	Potato Peelers	AVB
Boiler Feed Lines	AG/RPBA	Poultry Feeders	RPBA
Bottle Washing Equipment	RPBA	Private Hydrants	DCVA
Box Hydrants	PVBA/DCVA	Processing Tanks	AG/RPBA
Brine Tanks	AG/DCVA	Pump Seal Water	AG
Can Washing Equipment	AVB/PVBA	Pumps, Pneumatic Ejector	RPBA
Chemical Feeder Tanks	AG/RPBA	Pump Prime Lines	DCVA
Chilled Water Systems	RPBA	Pumps, Water Operated Ejector	RPBA
Chlorinators	RPBA	Radiator Flushing Equipment	RPBA

Continued on Next Page

Table Continued

Fixtures, Equipment and Areas	Protection	Fixtures, Equipment and Areas	Protection
Coffee Urns	AG/AVB	Recreational Vehicle Dump Stations	RPBA
Computer Cooling Lines	AG/RPBA	Serrated Faucets	AVB
Condensate Tanks	AG/RPBA	Service Sinks	AVB
Cooking Kettles	AG/AVB	Sewer Connected Equipment	AG
Cooling Towers	AG/RPBA	Sewer Flushing	AG
Decorative Ponds	AG/RPBA	Shampoo Basins/Hose Rinse	AVB
Degreasing Equipment	RPBA	Showers, Telephone	AVB
Demineralized Water Systems	RPBA	Sitz Baths	AVB
Dental Cuspidors	RPBA	Soap Mixing Tanks	AG/AVB
Detergent Dispensers (Dishwasher)	AVB	Solar Heating Systems	RPVA
Dialysis Equipment	RPBA	Solution Tanks	AG/RPBA
Dishwashers	AVB	Spas	AG/RPBA
Drinking Fountains	AG	Specimen Tanks	AG/RPBA
Dye Vats and Tanks	AG/RPBA	Starch Tanks	AG/DCVA
Dynamoters	DCVA	Stream-Air Sprays	RPBA
Emergency Generators	RPBA	Steam Cleaners	RPBA
Etching Tanks	AG/RPBA	Steam Ejectors	RPBA
Fermenting Tanks	AG/RPBA	Steam Generating Facilities	RPBA
Fertilizer Injection Equipment	RPBA	Sterilizers	RPBA
Film Processors	RPBA	Stills	RPBA
Fire Department Connections	DCVA	Sumps	AG
Fire Sprinkler Systems	DCVA	Swimming Polls	AG/RPBA
Floor Drains	AG	Toilets (Internal)	AG
Flushing Floor Drains	AVB	Trap Primers	AG
Foamite Systems	RPBA	Ultrasonic Baths	AG
Fountains, Ornamental	AG/RPBA	Urinals (Internal)	AG
Fume Hoods	AVB	Used Water Systems	RPBA
Garbage Can Washers	AVB/PVBA	Vats	AG/AVB
Garbage Disposals	AVB	Washing Pools	AG/RPBA
Heat Exchangers	RPVA	Wall Hydrants	AVB
Heat Pumps	RPBA	Wash Basins	AG/AVB
High Pressure Washers	DCVA	Wash-Up Sinks	AG/AVB
Hose Bibs	AVB	Wash Tanks	AG/AVB
Hoses, Kitchen Rinse	AVB	Wastewater Lines	AG
Hot Tubs	AG/RPBA	Water-Air Sprays	DCVA
Hot Water Heating Systems	RPBA	Water Closets (Internal)	AG
Hot Water Boilers	RPBA	Water Cooled Equipment	DCVA
Humidifier Tanks and Boxes	AG	Water Ejectors	RPBA
Hydraulically Operated Equipment	DCVA	Water Recirculating Systems	DCVA
Hydrotherapy Baths	AVB	Water Settling	DCVA
Ice Makers	AG	Water Treatment Tanks	AG/RPBA
Industrial Fluid Systems	RPBA	Water Trucks	DCVA
Interties (Looped) Water Systems	DCVA	Wet Vacuum Systems	RPBA
Irrigation Systems	AVB/PVBA	Whirlpool Baths	AVB
Janitor Sinks	AVB	Windshield Washer Fluid Aspirators	RPBA
Kitchen Equipment	AVB	X-Ray Processors	RPBA

Cross-Connection Control and Elimination

This CCC program element requires that the purveyor eliminate existing cross-connections wherever possible. If elimination is not possible, then approved backflow devices should be installed properly to eliminate the risk of contamination.

The City will endeavor to eliminate potential cross-connections where possible. The City will not allow any potential cross-connection unless it is protected by an approved backflow device for which a permit has been issued. Owners shall be responsible for following the provisions of the City's cross-connection control program. In addition, owners shall be responsible for the elimination or protection of all cross-connections on their premises. The City will conduct an inventory of existing backflow devices that it currently operates, maintains, and inspects. This inventory will include all devices on customer's premises that are the responsibility of the customer to maintain. The City will keep this inventory on file at the Public Works facility, and shall update the inventory as necessary.

The City shall begin eliminating potential cross-connections and requiring installation of backflow devices at all premises deemed to be "high-risk", such as water service connections at sewage facilities. Once potential "high-risk" cross-connections are eliminated, the City will concentrate its efforts on reducing potential medium and low risk cross connections.

Personnel Certification

WAC 246-290-490 requires that personnel, including one certified Cross-Connection Control Specialist (CCS), are provided by the purveyor to develop and implement a CCC program. **Table 5** shows the City's personnel certifications. Mr. Chris Strickland, Foreman; Mr. Keith Svarthumule, Senior Maintenance Technician; and Mr. Joe Walker, Maintenance Technician, are all certified Cross-Connection Control Specialists.

The City will continue to provide properly certified personnel to implement the CCC program. The City has the properly certified staff to implement and maintain a CCC program as outlined by the State.

Table 5
Water Division Personnel Certification

Name	Position	Certification
Bill Duffy	Public Works Superintendent	WDM4
Chris Strickland	Foreman	WDM2, CCS1, AR
Keith Svarthumule	Senior Maintenance Technician	WDM2, CCS1, BAT
Joe Walker	Maintenance Technician	WDM2, CCS1, BAT, AR
Rich Sardarov	Maintenance Technician	None
Ed Hedrick	Laborer	None

Certification Definitions

WDM - Water Distribution Manager

CCS - Cross Connection Control Specialist

AR - Asbestos Removal

BAT - Backflow Assembly Tester

Backflow Device Inspection and Testing

DOH requires that all backflow devices are routinely inspected and tested by certified personnel. Inspections are required at the time of installation, annually thereafter, after a backflow incident, and/or after the assembly is repaired, reinstalled, or relocated.

The City is responsible for maintaining those devices that are installed on the public water distribution system, not including those devices installed after a meter on private premises. For devices installed on customers' premise, the customer shall contact the City requesting inspection and testing of said devices. The customer will be subject to all applicable inspection and testing fees as may be established. On new installations, the City will (1) provide on-site evaluation and/or inspection of plans in order to determine the type of backflow device, if any, that will be required, (2) will issue permits, and (3) will perform inspection and testing. For existing premises, the City will perform evaluations and inspections of plans and/or premises and inform owners by letter of any corrective action deemed necessary, the method of achieving the correction, and the time allowed for the correction to be made. Ordinarily, corrections must be made within sixty days; however, the City may shorten this time period depending on the degree of hazard involved and the history of the device(s) in question. The City will then inspect the premises on or after the expiration date of the required action to correct a cross-connection. If found to be not in compliance with the City's request, the owner shall receive written notice that water service to the premises

will be discontinued. If the owner informs the City of extenuating circumstances as to why the correction has not been completed within five working days of receipt of the notice of termination, the City may grant a time extension up to, but not exceeding thirty days.

Inspection and testing of devices shall be done (1) during the initial installation, (2) during on-site reviews of existing installations, (3) after any repairs or maintenance, (4) after any relocation, and (5) on an annual basis. When an initial installation or annual test indicates that a backflow device is not functioning properly, the owner shall correct the malfunction within five working days as directed by the City. The owner shall contact the City after correcting the problem for re-inspecting and testing of the device(s).

The owner shall be responsible for the payment of all fees for (1) permits, (2) for annual or semi-annual device inspection/testing, (3) for re-testing if the device fails to operate correctly, and (4) for any re-inspections for non-compliance with City requirements. The fee for a backflow device permit shall be the same as the fee for a plumbing permit as specified in the Poulsbo Municipal Code Section 15.04.150. The City will continue to maintain records of backflow device inspections.

Testing Quality Control Assurance Program

This program element requires development and implementation of a quality control assurance program for the testing of backflow prevention devices. Successful implementation of this program element assures that all backflow prevention devices are tested in a similar manner and kept in optimal condition.

The City shall ensure that all testing procedures are completed in a consistent manner. Only certified personnel shall be utilized to test all backflow devices. Testing shall be recorded on the proper forms and maintained at the Public Works facility. Examples of testing forms can be found in the AWWA "Recommended Practice for Backflow Prevention and Cross-Connection Control" manual. Personnel shall be trained as outlined by the State, fulfilling all necessary requirements in order to comply with WAC 246-290-490.

Testing personnel shall adhere to the following steps: (1) use only properly operating and calibrated gauge equipment, (2) follow proper field test procedures, (3) consult the manufacturer's repair and maintenance manual when disassembly is required, (4) use only original manufacturer spare parts, and (5) retest the backflow device immediately after repair or maintenance.

In addition to the above steps, the following testing procedures shall be performed by a certified test personnel: (1) advise customer of an impending test/inspection so that the customer's staff may participate, (2) notify the fire department when shut down of a fire service is necessary, (3) flush residential dirt through test cocks before attaching test gauges, (4) ensure that the high and low pressure bypass hoses of the test kit are connected to the proper test cocks; open test cocks slowly when bleeding air through the bypass hoses, (5) test

gauges shall be properly calibrated by a certified testing agency, (6) and assemblies should be tested before the warranty expiration date. For further testing details, refer to the AWWA manual.

Incident Response

This CCC program element requires that the purveyor develop a backflow incident response plan. The following paragraph outlines the City's response to a backflow incident. Other emergency response procedures are included in the ***City of Poulsbo Emergency Response Plan***.

Emergency Condition : **Water System Contamination Due to a Backflow Incident**
Impact on System : Potentially major impact. Water not suitable for potable use - loss of supply.
Emergency Response :

1. Notify the City CCS personnel of the incident.
2. Shut down the affected mains if possible to contain the affected contaminants.
3. Notify DOH of the backflow incident.
4. Notify all customers of the problem and instruct them to boil all water to be used for consumption and cooking or issue a no-drinking warning.
5. Flush affected water mains to remove contaminants.
6. Disinfect reservoirs and water mains, as necessary, to remove contaminated residuals.
7. Analyze water quality in other parts of the distribution system to ensure that all contaminants were contained.

This document (and the City of Poulsbo Emergency Response Plan) outlines procedures to be followed if an emergency arises. When a cross-connection control emergency is called into the Poulsbo Police Department, or other emergency responder during non-business hours, the responder will notify the Public Works Department on-call person. This person assesses the emergency and will notify any water division personnel as deemed necessary, depending on the severity of the emergency. All emergencies are reported to Mr. Bill Duffy, Public Works Superintendent. If the Public Works Superintendent is not available, then the Foreman, Mr. Chris Strickland, should be contacted. One of these persons will direct the emergency response efforts. This person will be responsible for coordinating with water division personnel, as well as other emergency responders, if necessary.

Public Education

Another CCC program requirement is that educational information of the CCC program be included in existing water system materials that are distributed to customers. Educational

materials can be included in pamphlets, brochures, bill inserts, public service announcements, and consumer confidence reports.

The City currently distributes water conservation information via bill inserts. The City will develop cross-connection control program education materials and will include them as bill inserts also.

Record Keeping

Purveyors must also develop and maintain records of their CCC program, as mandated by DOH. At a minimum, purveyors must maintain the following records:

- Master list of service connections and/or premises where backflow devices are protecting the public water system
- Assessed hazard level of each backflow device
- Inventory information on approved air gaps, including location, degree of hazard, installation date, inspection history, inspection results, and personnel conducting inspections
- Backflow inventory information including location, assembly description, installation date, inspection history, test and repair history, test results, and inspecting personnel
- Atmospheric Vacuum Breaker (AVB) inventory including location, description, installation date, inspection history, and inspecting personnel
- Program summary and backflow incident reports

The City currently maintains some program records including backflow device inspection reports. The City will keep records as required by the new CCC program. At a minimum the City will maintain the following information: (1) installation date of devices, (2) location of backflow devices, (3) inspection and testing reports of backflow devices, (4) performances of backflow devices, and (5) performance of licensed testers. All records will be on file at the Public Works facility to allow access by water system personnel.

Reclaimed Water Requirements

The final CCC program requirement is for systems that distribute or receive reclaimed water within their water service area. For these systems, additional cross-connection control requirements may be imposed by DOH in any permits issued in accordance with Chapter 90.46 RCW.

The City currently does not distribute or receive reclaimed water within its service area, therefore these requirements are not applicable. However, if reclaimed water is used in the future, then the City will follow all requirements of the permits issued under Chapter 90.46 RCW.

PROGRAM IMPLEMENTATION AND RECOMMENDATIONS

The City's cross-connection control program is an on-going effort that requires staffing and resources to ensure its effectiveness in protecting the quality of drinking water in the distribution system. It is recommended that the first step the City takes is to update its cross-connection control ordinance. The language in this ordinance needs to be updated to reflect the requirements of *WAC 246-290-490* and adopt the CCC program outlined in this document. In addition, the City should continue to reference the American Water Works Association (AWWA) manual entitled, "Recommended Practice for Backflow Prevention and Cross-Connection Control (AWWA M14)" for the development of its updated CCC program ordinance.

The City should also adopt a hazard evaluation program based on risk to the public drinking water supply. This evaluation should rank existing and potential cross-connections as high, medium and low risk. Based on the results of this evaluation, the City should then begin an elimination program, eliminating the high-risk cross-connections first.

The City should also continue its inspection practices of the installed approved backflow devices. The City should continue documenting inspections in order to comply with the regulatory requirements.

The City currently meets the regulatory requirement of having at least one CCS (cross-connection specialist) within the water division to administer its CCC program. The City is encouraged to continue its active training program in order to comply with these requirements.

Finally, it is recommended that the City update its public education materials to include information on the City's CCC program. The City currently uses bill inserts and handouts to disseminate information to customers. The City could either add CCC program information to existing material, or create a separate CCC program handout.

APPENDIX I

CAPITAL IMPROVEMENT PLAN COST ESTIMATES

City of Poulsbo
Preliminary Project Cost Estimate
Water Supply Project WS-1
Pugh Well/Lincoln Wells No. 1 & No. 2 Mn Treatment

NO.	ITEM	QUANTITY	UNIT PRICE	AMOUNT
1	Pugh Well/Lincoln Wells No. 1 & No. 2 Mn Treatment	1 LS	$ 800,000	$ 800,000
	Total Estimated Project Cost (provided by the City):.....			**$ 800,000**

City of Poulsbo
Preliminary Project Cost Estimate
Water Supply Project WS-2
West Side Well Treatment

NO.	ITEM	QUANTITY	UNIT PRICE	AMOUNT
1	West Side Well Treatment	1 LS	$ 600,000	$ 600,000
	Total Estimated Project Cost (provided by the City):.....			**$ 600,000**

City of Poulsbo
Preliminary Project Cost Estimate
Water Supply Project WS-3
Long Term Water Supply Study

NO.	ITEM	QUANTITY	UNIT PRICE	AMOUNT
1	Long Term Water Supply Study	1 LS	$ 30,000	$ 30,000
	Total Estimated Project Cost:.....			**$ 30,000**

City of Poulsbo
Preliminary Project Cost Estimate
Water Supply Project WS-4
Big Valley Well No. 3

NO.	ITEM	QUANTITY	UNIT PRICE	AMOUNT
	DRILL AND DEVELOP WELL			
1	Mobilization, Cleanup, and Demobilization	1 LS	$ 8,000	$ 8,000
2	Trench Excavation Safety Systems	1 LS	$ 1,000	$ 1,000
3	Site Work	1 LS	$ 5,000	$ 5,000
4	Erosion Control	1 LS	$ 1,000	$ 1,000
5	Install Surface Seal	20 LS	$ 50	$ 1,000
6	12-inch Drive Shoe	1 EA	$ 300	$ 300
7	12-inch Shoe Cut	1 EA	$ 2,500	$ 2,500
8	Drill Hole for 12-inch Casing	300 LF	$ 75	$ 22,500
9	Furnish and Install 12-inch Casing	300 LF	$ 35	$ 10,500
10	Furnish and Install Screen and Other	1 LS	$ 10,000	$ 10,000
11	Authorized Hourly Work	60 HR	$ 200	$ 12,000
12	Furnish and Install Pump Test Equipment	1 LS	$ 2,000	$ 2,000
13	Pump Test	72 HR	$ 200	$ 14,400
14	Standby Time	20 HR	$ 120	$ 2,400
	Subtotal			$ 92,600
	Tax rate (8.7%)			8,056
	Subtotal:			$ 100,700
	Contingency (20%)			$ 20,140
	Total Estimated Construction Cost:			**$ 121,000**
	Engineering and Administrative Costs (25%):			$ 30,000
	Total Estimated Project Cost:			**$ 151,000**

	EQUIP WELL			
1	Mobilization, Cleanup, and Demobilization	1 LS	$ 15,000	$ 15,000
2	Wellhead Foundation and Enclosure	1 LS	$ 10,000	$ 10,000
3	Submersible Well Pump (500 gpm)	1 LS	$ 15,000	$ 15,000
4	Site Piping, Valves, and Appurtenances	1 LS	$ 30,000	$ 30,000
5	Modifications to Treatment Systems	2 LS	$ 20,000	$ 40,000
6	Electrical, Telemetry, and Instrumentation	1 LS	$ 50,000	$ 50,000
	Subtotal			$ 160,000
	Tax rate (8.7%)			13,920
	Subtotal:			$ 173,900
	Contingency (20%)			$ 34,780
	Total Estimated Construction Cost:			**$ 209,000**
	Engineering and Administrative Costs (25%):			$ 52,000
	Total Estimated Project Cost:			**$ 261,000**

City of Poulsbo
Preliminary Project Cost Estimate
Water Supply Project WS-5
Westside Well No. 2

NO.	ITEM	QUANTITY	UNIT PRICE	AMOUNT
	DRILL AND DEVELOP WELL			
1	Mobilization, Cleanup, and Demobilization	1 LS	$ 8,000	$ 8,000
2	Trench Excavation Safety Systems	1 LS	$ 1,000	$ 1,000
3	Site Work	1 LS	$ 5,000	$ 5,000
4	Erosion Control	1 LS	$ 1,000	$ 1,000
5	Install Surface Seal	20 LS	$ 50	$ 1,000
6	12-inch Drive Shoe	1 EA	$ 300	$ 300
7	12-inch Shoe Cut	1 EA	$ 2,500	$ 2,500
8	Drill Hole for 12-inch Casing	300 LF	$ 75	$ 22,500
9	Furnish and Install 12-inch Casing	300 LF	$ 35	$ 10,500
10	Furnish and Install Screen and Other	1 LS	$ 10,000	$ 10,000
11	Authorized Hourly Work	60 HR	$ 200	$ 12,000
12	Furnish and Install Pump Test Equipment	1 LS	$ 2,000	$ 2,000
13	Pump Test	72 HR	$ 200	$ 14,400
14	Standby Time	20 HR	$ 120	$ 2,400
	Subtotal			$ 92,600
	Tax rate (8.7%)			8,056
	Subtotal:			$ 100,700
	Contingency (20%)			$ 20,140
	Total Estimated Construction Cost:			**$ 121,000**
	Engineering and Administrative Costs (25%):			$ 30,000
	Total Estimated Project Cost:			**$ 151,000**

	EQUIP WELL			
1	Mobilization, Cleanup, and Demobilization	1 LS	$ 15,000	$ 15,000
2	Wellhead Foundation and Enclosure	1 LS	$ 10,000	$ 10,000
3	Submersible Well Pump (500 gpm)	1 LS	$ 15,000	$ 15,000
4	Site Piping, Valves, and Appurtenances	1 LS	$ 30,000	$ 30,000
5	Modifications to Treatment Systems	2 LS	$ 20,000	$ 40,000
6	Electrical, Telemetry, and Instrumentation	1 LS	$ 50,000	$ 50,000
	Subtotal			$ 160,000
	Tax rate (8.7%)			13,920
	Subtotal:			$ 173,900
	Contingency (20%)			$ 34,780
	Total Estimated Construction Cost:			**$ 209,000**
	Engineering and Administrative Costs (25%):			$ 52,000
	Total Estimated Project Cost:			**$ 261,000**

City of Poulsbo
Preliminary Project Cost Estimate
Water Supply Project WS-6
Acquire New Water Rights or Supply Capacity

NO.	ITEM	QUANTITY	UNIT PRICE	AMOUNT
1	Additional Supply Capacity	1 LS	Unknown	Unknown
	Total Estimated Project Cost:.....			**Unknown**

City of Poulsbo
Preliminary Project Cost Estimate
Storage Project ST-1
Wilderness Park Reservoir Repairs

NO.	ITEM	QUANTITY	UNIT PRICE	AMOUNT
1	Wilderness Park Reservoir Repairs	1 LS	$ 500,000	$ 500,000
	Total Estimated Project Cost (provided by the City):.....			**$ 500,000**

City of Poulsbo
Preliminary Project Cost Estimate
Storage Project ST-2
Raab Park Reservoir Replacement

NO.	ITEM	QUANTITY	UNIT PRICE	AMOUNT
1	Raab Park Reservoir Replacement	1 LS	$ 680,000	$ 680,000
	Total Estimated Project Cost (provided by the City):.....			**$ 680,000**

City of Poulsbo
Preliminary Project Cost Estimate
Storage Project ST-3
Reservoir Coating Program

NO.	ITEM	QUANTITY	UNIT PRICE	AMOUNT
1	Reservoir Coating Program	1 LS	$ 680,000	$ 680,000
	Total Estimated Project Cost (provided by the City):.....			**$ 680,000**

City of Poulsbo
Preliminary Project Cost Estimate
Booster Station Project BS-1
Wilderness Park Booster Station

NO.	ITEM	QUANTITY	UNIT PRICE	AMOUNT
1	Mobilization, Cleanup, and Demobilization	1 LS	$ 30,000	$ 30,000
2	CMU Building	1 LS	$ 69,000	$ 69,000
3	Booster Pump, 750 gpm	3 EA	$ 7,500	$ 22,500
4	Piping, Valves, and Fittings	1 LS	$ 45,000	$ 45,000
5	Electrical, Telemetry, and Instrumentation	1 LS	$ 75,000	$ 75,000
6	Standby Power Generator	1 LS	$ 60,000	$ 60,000
7	Automatic Transfer Switch	1 LS	$ 5,000	$ 5,000
	Subtotal			$ 306,500
	Tax rate (8.7%)			26,666
	Subtotal:			$ 333,200
	Contingency (20%)			$ 66,640
	Total Estimated Construction Cost:			**$ 400,000**
	Engineering and Administrative Costs (25%):			$ 100,000
	Total Estimated Project Cost:			**$ 500,000**

City of Poulsbo
Preliminary Project Cost Estimate
Booster Station Project BS-2
340 Zone Fire Flow Pump

NO.	ITEM	QUANTITY	UNIT PRICE	AMOUNT
1	340 Zone Fire Flow Pump	1 LS	$ 250,000	$ 250,000
	Total Estimated Project Cost:.....….....…….....			**$ 250,000**

City of Poulsbo
Preliminary Project Cost Estimate
Distribution System Improvement D-1
Old Town District Main Replacement

NO.	ITEM	QUANTITY	UNIT PRICE	AMOUNT
1	Old Town District Main Replacement	1 LS	$ 1,080,000	$ 1,080,000

Total Estimated Project Cost (provided by the City):..... **$ 1,080,000**

City of Poulsbo
Preliminary Project Cost Estimate
Distribution System Improvement D-2
Viking Avenue PRVs

NO.	ITEM	QUANTITY	UNIT PRICE	AMOUNT
1	Viking Avenue PRVs	1 LS	$ 220,000	$ 220,000
	Total Estimated Project Cost (provided by the City):.....			**$ 220,000**

City of Poulsbo
Preliminary Project Cost Estimate
Distribution System Improvement D-3
Hostmark Transmission Main

NO.	ITEM	QUANTITY	UNIT PRICE	AMOUNT
1	Hostmark Transmission Main	1 LS	$ 500,000	$ 500,000
	Total Estimated Project Cost (provided by the City):.....			**$ 500,000**

City of Poulsbo
Preliminary Project Cost Estimate
Distribution System Improvement D-4
Hostmark Distribution Main

NO.	ITEM	QUANTITY	UNIT PRICE	AMOUNT
1	Hostmark Distribution Main	1 LS	$ 600,000	$ 600,000
	Total Estimated Project Cost (provided by the City):.....			**$ 600,000**

City of Poulsbo
Preliminary Project Cost Estimate
Distribution System Improvement D-5
SR 305 Crossing

NO.	ITEM	QUANTITY	UNIT PRICE	AMOUNT
1	SR 305 Crossing	1 LS	$ 200,000	$ 200,000
	Total Estimated Project Cost (provided by the City):.....			**$ 200,000**

City of Poulsbo
Preliminary Project Cost Estimate
Distribution System Improvement D-6
Liberty Ridge Fire Flow

NO.	ITEM	QUANTITY	UNIT PRICE	AMOUNT
1	Liberty Ridge Fire Flow	1 LS	$ 100,000	$ 100,000
	Total Estimated Project Cost :.....			**$ 100,000**

City of Poulsbo
Preliminary Project Cost Estimate
Distribution System Improvement D-7
Water Main Replacement Program

NO.	ITEM	QUANTITY	UNIT PRICE	AMOUNT
1	Water Main Replacement Program	1 LS	$ 250,000	$ 250,000
	Total Estimated Project Cost :.....			**$ 250,000**

City of Poulsbo
Preliminary Project Cost Estimate
Miscellaneous Project M-1
Meter Upgrade and Replacement Program

NO.	ITEM	QUANTITY	UNIT PRICE	AMOUNT
1	Meter Upgrade and Replacement Program	1 LS	$ 350,000	$ 350,000
	Total Estimated Project Cost (provided by the City):.....			**$ 350,000**

City of Poulsbo
Preliminary Project Cost Estimate
Miscellaneous Project M-2
Telemetry System Upgrades

NO.	ITEM	QUANTITY	UNIT PRICE	AMOUNT
1	Telemetry System Upgrades	1 LS	$ 50,000	$ 50,000
	Total Estimated Project Cost (provided by the City):.....			**$ 50,000**

City of Poulsbo
Preliminary Project Cost Estimate
Miscellaneous Project M-3
Public Works Complex

NO.	ITEM	QUANTITY	UNIT PRICE	AMOUNT
1	Public Works Complex	1 LS	$ 1,173,000	$ 1,173,000
	Total Estimated Project Cost (provided by the City):.....			**$ 1,173,000**

City of Poulsbo
Preliminary Project Cost Estimate
Miscellaneous Project M-4
Water System Plan Extension

NO.	ITEM	QUANTITY	UNIT PRICE	AMOUNT
1	Water System Plan Extension	1 LS	$ 20,000	$ 20,000
	Total Estimated Project Cost:.....			**$ 20,000**

City of Poulsbo
Preliminary Project Cost Estimate
Miscellaneous Project M-5
Water System Plan Update

NO.	ITEM	QUANTITY	UNIT PRICE	AMOUNT
1	Water System Plan Update	1 LS	$ 75,000	$ 75,000
	Total Estimated Project Cost:.....			**$ 75,000**