EXHIBIT F

Mitigation Plan

(March 17, 2021)

PORT OF POULSBO
BREAKWATER REHABILITATION PROJECT

MITIGATION PLAN

PREPARED FOR:

PORT OF POULSBO
PO Box 732
Poulsbo, WA 98370

PREPARED BY:

MARINE SURVEYS & ASSESSMENTS
380 JEFFERSON STREET (THE CUPOLA HOUSE @ POINT HUDSON)
PORT TOWNSEND, WA 98368 US

AND

SOUNDWEST ENGINEERING ASSOCIATES
8745 PACIFIC AVE. NW, SUITE 201
SILVERDALE, WA 98383

JUNE 2020
(REVISION NOTE: Revised by Soundwest Engineering Assoc. October 2020 to: eliminate proposed relocation of seaplane floats, make minor revisions to sunken vessel notations based on SAV Survey completed July 2020, and address City of Poulsbo comments; strikethroughs (red) and insertions (green) were used to indicate these minor changes.

CERTIFICATION

These documents were prepared under the direct supervision and direction of the following professionals.

Approved by Amy Leitman
Marine Surveys & Assessments
Project Biologist

Approved by John Piccone, P.E.
Soundwest Engineering Associates
Project Engineer

1 TABLE OF CONTENTS

LIST OF TABLES

LIST OF FIGURES

LIST OF SHEETS

Exhibit A: U.S. Army Corps of Engineers RPG-6 Calculator

1 INTRODUCTION

The Port of Poulsbo (Port) proposes to replace their existing deteriorated timber-pile breakwater at the Port's marina. The marina is located at 18809 Front Street NE, Poulsbo, Washington (NW ¼ of S23, T26N, R01E, W.M.) (Figure 1). Breakwater rehabilitation activities consist of the following components: 1) removal of the existing creosote-treated timber-pile breakwater (including removal of the breakwater, removal of the log boom off of the West breakwater, removal of a portion of the log boom off of the South breakwater, and removal of existing toe protection stone and anthropogenic debris at the base of the existing breakwater) and installing a reconditioned concrete pontoon floating breakwater water with associated new steel pipe pile; 2.) installing breakwater finger floats; 3.) installing a new grated main walk float extension connecting the breakwater to AA-dock; ~~4.) installing a new float plane base float at the northwest end of the new breakwater (including removal of the existing seaplane base); 5.)~~ 4.) installing a Floating Upweller System (FLUSPY) on the new floating breakwater; and ~~6.)~~ 5.) installing a floating restroom on the new floating breakwater. ~~The proposed sea plane base, FLUPSY, and floating restroom are project components that may be phased to occur sometime after completion of the breakwater and associated floats.~~ Project activities are anticipated to occur from July 2021 through February of 2022.

In connection with the proposed breakwater rehabilitation (Project), the Port is submitting an application for a U.S. Army Corps of Engineers (USACE) Section 10 and Section 404 permit. As part of the local, state and federal permitting process and pursuant to the relevant regulations governing this project, the Port has prepared this Mitigation Plan to address potential impacts to the aquatic environment that may result from the proposed Project.

Figure 1. Project area outlined in red.

This Mitigation Plan describes existing site conditions, the proposed modifications that may affect existing conditions, an analysis of the mitigation sequencing process that informed project design, and proposed protection measures during construction. Overall, this Mitigation Plan illustrates that the project will result in enhanced aquatic ecological functions relative to existing conditions.

2 EXISTING CONDITIONS

2.1 SITE DESCRIPTION

The Project is located along the northeast shoreline of Liberty Bay in Poulsbo, Kitsap County, Washington (Sheet 1, Figure 1). The Port of Poulsbo recreational marina facility consists of seven docks providing both covered and open long-term and transient moorage, a fuel dock/float, and pump-out facilities. The marina currently provides 254 permanent moorage slips and 130 transient moorage slips (384 total slips).

The existing vertical-pile breakwater, originally constructed in the 1960's, is composed of two sections, the West breakwater and the South breakwater. Each section of breakwater is approximately 372 feet long and 367 feet long, respectively, and consists of a total of 844 creosote-treated timber plumb and batter pile, averaging 12-inch diameter, which are structurally supported by cabled creosote-treated timber walers. Approximately 33 steel pile are present on the South breakwater and were installed as a maintenance action in 2010 and 2015. A timber dolphin-supported log boom approximately 317 feet long with 42 timber pile is located off the northwest end of the West Breakwater (also referred to as the "north log boom"). Additionally, a timber dolphin-supported log boom approximately 250 feet long with 30 timber pile is located off of the southeast end of the South breakwater (Sheet 2) (also referred to as the "south log boom"). An existing 95-ft long seaplane base provides seaplane moorage on the northernmost side of the site and includes two creosote-treated timber pile.

2.2 PROJECT DESCRIPTION

The purpose of the Project is to replace the existing deteriorated breakwater and provide additional transient moorage at the Port of Poulsbo marina. The existing timber-pile breakwater has deteriorated to the point that it must be replaced with a new structure to provide wave protection to the recreational marina. Many of the existing timber pile are broken and are either not in contact with the substrate or the connections to the breakwater walers has been compromised. In addition, many of the cable straps securing the walers to the plumb and batter pile are missing, resulting in unsecured or missing walers (Sheet 3).

The Port proposes to replace the existing breakwater with a floating concrete pontoon breakwater (Sheet 4 & 5). The concrete pontoons will be donated by Elliott Bay Marina, reconditioned (including new timber elements and through-rods, and new timber skirt), and installed at the site waterward of the existing breakwater. A small number of new concrete pontoons will be intermixed with the Elliott Bay marina pontoons where needed at corners, and transitions. The new breakwater will be located at approximately -10 to -12 ft Mean Lower Low Water (MLLW) and will include the installation of 72 new 20-inch steel pipe pile. Concurrent with the new floating breakwater installation, the existing breakwater, the north log boom, a portion of the south log boom~~, and the existing seaplane base~~ will be removed. This will entail the removal of approximately ~~900~~ 898 creosote-treated timber pile and 33 steel pile from the site (~~933~~ 931 total pile). The connection of the new breakwater to AA dock (also referred to as the breakwater access float) will consist of a new grated main walk float extension.

~~The Port proposes to relocate the existing sea plane base to the northwest end of the new breakwater. The existing sea plane base float grounds out at low tide. Relocating the float to the breakwater will prevent this grounding, as well as reduce disturbances related to operating sea planes near the Liberty Bay Park boardwalk.~~

2.3 EXISTING ECOLOGICAL FUNCTIONS

Habitat conditions on and adjacent to the site are described in the Critical Areas Report (Grette Associates 2019).

The shoreline of the subject property is entirely developed, with concrete bulkheads and riprap slopes along both sides of the Port's public boat launch. Little to no marine riparian vegetation is present along the shoreline near the marina. The Port's marina extends off shore with most of the marina floats at -8 to -9 ft MLLW (Sheet 2). Patchy saltmarsh wetlands are mapped along the residential shoreline of Liberty Bay south of the Port's property and east of the existing breakwater. These areas are approximately 320 feet to the east of the easternmost portion of the existing South breakwater. These wetlands likely consist of sparse pickleweed (*Salicornia virginica*), saltgrass (*Distichlis spicata*) and other high saltmarsh species.

The aquatic habitat near the existing breakwater consists of substrate which is primarily sand and silt, with some gravels and shell hash present. The project area is primarily flat, however sonar survey information reveals the presence of scour protection rock, debris and silt mounded along both sides of the breakwater. There is no eelgrass or substantial macroalgae in the vicinity of the existing breakwater, and there is no documented forage fish spawning in the Project Area. The nearest documented forage fish spawning area is for surf smelt (*Hypomesus pretiosus*) and is located approximately 300 feet east of the Project Area (WDFW 2019). https://wdfw.wa.gov/fishing/management/marine-beach-spawning

The existing breakwater consists of creosote-treated timber pile (both batter and plumb), averaging 12 inches in diameter. A total of ~~900~~ 898 creosote-treated timber pile are proposed to be removed from the site. These pile have been present on the site since the construction of the breakwater in the 1960's and have been leaching petroleum hydrocarbons into the surrounding sediment and water column since that time. A number of studies have shown the deleterious effects of creosote compounds on aquatic marine life and surrounding sediments (EPA 2008).

In addition, the timber pile breakwater forms a solid wall, disrupting water circulation patterns at the site. The resulting lack of circulation has led to the degradation of water quality within the marina through a lack of adequate flushing.

3 IMPACTS ANALYSIS

The proposed Project involves replacement of the Port's marina breakwater, including the installation of a new floating breakwater and associated floats, and the demolition of the existing timber-pile breakwater and log booms. Anticipated impacts resulting from the proposed project include the installation of new overwater coverage, the driving of new steel pipe pile to support the new floating breakwater and floats, and the demolition of the existing breakwater. Table 1 summarizes the areas of disturbance related to the existing and proposed breakwater features, the existing and proposed numbers of pile, and the area of mitigation actions proposed to further offset the impacts of the Project in the site.

3.1 OVERWATER COVER

Construction of the new floating breakwater, ~~sea plane base,~~ main walk float extension, finger floats, FLUPSY, and floating restroom will involve the installation of approximately ~~21,491~~ 20,691 sq ft of overwater structure shading at the site (Table 1). While the concrete pontoon breakwater sections cannot be grated due to structural requirements, the float extension, finger floats, FLUPSY, and restroom floats~~, and sea plane base floats~~ will all be grated in compliance with WAC 220-660-400, resulting in a reduction of overwater shading of approximately ~~1,863~~ 1,688 sq. ft.

The installation of new overwater coverage at the site will increase the shading of subtidal habitats. The new breakwater and associated floats and pile will be installed primarily at depths between -10 ft and -12 ft MLLW (Sheet 2) whereas existing overwater structures to be removed are located in primarily shallower waters ranging from 0 ft MLLW to -10 ft MLLW. As noted, there is no eelgrass in the project vicinity and only very sparse macroalgae was observed during an underwater site assessment (Grette Associates 2019). Furthermore, the deeper water (subtidal) being shaded is not utilized by juvenile salmonids for migration, and would not present an impediment to migration. As such, it is anticipated that shading impacts related to the increase in overwater coverage will be minimal.

The existing breakwater is located at approximately -8 to -9 ft MLLW~~, while the existing sea plane base float is located at approximately -4 ft MLLW~~. The north log boom is located at approximately -10 ft MLLW and will be entirely removed. The south log boom is located at approximately 0 ft MLLW to -9 ft MLLW and will be partially removed. Removal of these structures will reduce shading and substrate impacts over intertidal and shallow subtidal habitats. Particularly along shore, removal of the ~~sea plane base float and~~ south log boom will improve nearshore habitat conditions by increasing epibenthic productivity and removing structure within the intertidal habitat. A net increase of approximately ~~37,170~~ 37,573 sq ft in restored aquatic habitat is anticipated to result from the proposed project compared to existing conditions.

Removal of the existing vertical pile breakwater and associated batter pile will remove a significant source of shading from the site. Due to the orientation of the existing breakwater, the vertical timber pile wall casts a large shadow on the water column and substrate to the north and northeast of the wall. This shading reduces productivity of the water column and substrate habitat, and provides cover for juvenile salmonid predators such as pile perch. Removal of this shading will restore productivity to this area while also removing refuge for juvenile salmonid predators.

Overwater coverage to be removed from the site (~~8,570~~ 8,000 sq ft). In addition to the removal of ~~900~~ 898 creosote-treated piles from the site and installation of open-grated decking, the Port proposes to remove approximately 28,248 sq ft of substrate hard armoring through the removal of rock and debris at the toe of the existing breakwater; approximately 22,290 sq ft of sedimentation and creosote-treated debris at the base of the north and south log boom; and approximately ~~1,416~~ 1,414 sq ft substrate impacts associated with removal of log boom floats and pilings~~, removal of the existing sea plane base floats and pilings,~~ and removal of ~~four~~ a sunken vessel~~s~~ and concrete debris (Table 1). This will result in a net reduction of substrate impacts at the site of approximately ~~51,797~~ 51,795 sq ft.

Table 1. Total Project Quantities

Work Item	Total Area (sq ft)	No. Piles	Shaded Area[1] (sq ft)	Substrate Impacts (sq ft)
Installation				
Steel Piles - 20" Dia. Plumb - Breakwater	52	24	-	52
Steel Piles - 20" Dia. Batter - Breakwater	408	24	356	52
Steel Piles - 20" Dia. Plumb - ~~Seaplane Float~~ Breakwater Extension	7	3	-	7
Steel Piles - 20" Dia. Batter - ~~Seaplane Float~~ Breakwater Extension	51	3	44	7
Steel Piles - 20" Dia. Plumb - Breakwater Access Float	15	7	-	15
Steel Piles - 20" Dia. Plumb - 50' Finger Piers	24	11	-	24
Breakwater Floats	13,225	-	13,225	-
Breakwater Access Float	1,890	-	1,323	-
50' Finger Floats (Incl. Knee Brace)	2,860	-	2,200	-
30' Finger Floats (Incl. Knee Brace)	1,166	-	862	-
~~Seaplane~~ Breakwater Extension	1,738	-	1,738	-
~~Seaplane Floats~~	~~975~~	~~-~~	~~800~~	~~-~~
FLUPSY (15' x 30')	450	-	450	-
Restroom (17' x 29')	493	-	493	-
Installation Totals	~~**23,354**~~ **22,379**	**72**	~~**21,491**~~ **20,691**	**157**
Demolition				
Existing Breakwater Wall				
Creosote Treated Timber Piles - 12" Dia. Ave. Plumb - Exist. Breakwater Wall	579	737	-	579
Creosote Treated Whaler - Existing Breakwater Wall	980	-	980	-
Creosote Treated Timber Piles - 12" Dia. Batter - Existing Breakwater Wall	642	107	558	84
Steel Batter Piles - 12" Dia - Existing Breakwater Wall	145	17	131	13
Steel Batter Piles - 16" Dia - Existing Breakwater Wall	91	8	79	11
Steel Plumb Piles - 16" Dia - Existing Breakwater Wall	11	8	-	11
Crows Nest Extension Platform (typ. 2 plcs.)	144	-	144	-
Rock and Debris Mound Supporting Wall	28,248	-	-	28,248
North Log Boom and Floats				
Creosote Treated Log Boom	2,087	-	2,087	-
Creosote Treated Dolphins (3-16" Batter Pile Cluster - Typ. 14 plcs.)	476	42	417	59
Concrete and Timber Floats	2,724	-	2,724	-
Sedimentation and Creosote Treated Debris at Base of Log Boom	16,328	-	-	16,328
South Log Boom				
Creosote Treated Log Boom	760	-	760	-
Creosote Treated Dolphins (3-16" Batter Pile Cluster - Typ. 4 plcs.)	136	12	119	17
Sedimentation and Creosote Treated Debris at Base of Log Boom	5,962	-	-	5,962
~~**Existing Sea Plane Dock**~~				
~~Float Plane Base Floats (6' x 95')~~	~~570~~	~~-~~	~~570~~	~~-~~
~~Creosote Treated Timber Piles – 12" Dia. Plumb Piles – Seaplane Base~~	~~2~~	~~2~~	~~-~~	~~2~~
Sunken Vessels and Debris				
Sunken Vessel~~s (4 locations)~~ and Concrete Debris	640	-	-	640
Demolition Totals	~~**60,524**~~ **59,952**	~~**933**~~ **931**	~~**8,570**~~ **8,000**	~~**51,954**~~ **51,952**
Mitigation				
Net Increase in Aquatic Habitat (sq ft) – Overwater Coverage & Substrate Impact Combined			~~**37,170**~~ **37,573**	
Number of Creosote-Treated Piles Removed from Aquatic Habitat			~~**900**~~ **898**	
Net Reduction Substrate Impact / Hard Armoring (sq ft)			~~**51,797**~~ **51,795**	

[1] The main walk floats~~,~~ and finger floats~~, and sea plane base floats~~ will be grated in compliance with WAC 220-660-400. Shaded area represents the effective shading area over the water (total area minus grating open area).

3.2 PILE DRIVING AND HABITAT DISTURBANCE

The Project has the potential to produce elevated sound and habitat disturbance during pile work, float and pontoon installation, and scour protection rock/debris removal, which may cause temporary disturbance to the Project Area. Impacts to aquatic species from elevated underwater sound are primarily associated with impact pile driving. Sound levels produced during impact pile driving can cause injury and/or disturbance to aquatic species including listed salmonids, rockfish, marbled murrelet, Southern Resident killer whale, and humpback whale depending on pile size, proximity to the pile, number of impact strikes per day, and driving and environmental conditions. All pile will be driven with a vibratory hammer to the greatest extent practicable to minimize the potential effects of elevated underwater sound on aquatic species.

It is anticipated that all pile for this project will be installed using a vibratory hammer. However, in the unlikely event that a pile was to encounter a geologic anomaly that would prevent it from reaching the required tip elevation, the project engineer may need to use an impact hammer to finish driving the pile. Project engineers anticipate that up to 8 pile (approximately 15% of total pile driven) may need to be impact driven to final tip elevation. If impact pile driving is necessary, it is anticipated that only up to four pile would be impact driven in a single day. This is likely an overly conservative estimate.

The area of potential effect on aquatic species associated with elevated sound from impact pile driving would be contained within Liberty Bay, and would not extend into greater Puget Sound. Given the relatively small area of potential effect, the likely very short duration of impact pile driving over the course of the project, lack of documented sightings of listed marine mammals near the Project area, limited distribution of listed rockfish, adherence to approved in-water work windows for the protection of listed salmonids, and utilization of other standard pile driving BMPs (Section 4.2), the potential effects of elevated underwater sound on aquatic species in and near the Project Area is expected to be negligible.

Habitat disturbance associated with the Project could result from equipment and barge use, as well as removal and installation of breakwater and float structures. Potential habitat disturbance is expected to be temporary, highly localized, and minimal. Construction equipment will be staged on floating barges that will not ground out or otherwise impact the aquatic environment. All construction debris will be collected and disposed of in uplands and will not be allowed to enter Waters of the State (i.e., Liberty Bay). Other standard construction BMPs (Section 4.2) will be strictly followed to prevent and minimize potential impacts to aquatic species and habitat. Overall, the effects of habitat disturbance associated with construction are expected to be biologically insignificant.

3.3 ELEVATED TURBIDITY AND WATER QUALITY IMPACTS

Pile removal and pile driving are activities that disturb the substrate, which temporarily suspends sediment in the water column and results in localized and minimal increases in turbidity. Elevated suspended sediments may affect aquatic habitat productivity on a highly localized scale, but these effects are expected to be temporary and minimal and will be further reduced through strict adherence to Project BMPs (Section 4.2). Project construction will be in compliance with Washington State water quality standards as administered by the Department of Ecology under WAC 173 201A 210(1)(e)(i). Based on the WAC, temporary exceedances for turbidity would be allowed within a 150-foot radius from the sediment disturbing activities.

During all project construction, there is a risk of minimal, localized, and temporary water quality impacts from the unintentional release of fuel, lubricants, or hydraulic fluid from construction machinery. All prudent and necessary actions would be taken to avoid such a discharge, including regular maintenance and checks for potential contamination sources. In the event of a spill, containment and cleanup would take precedence over continued work, ensuring that effects would be temporary and extremely localized relative to the Project area as a whole.

There would be potential for construction material or debris to enter the water during construction. This risk will be managed through adherence to standard above-water and in-water construction BMPs (Section 4.2). Pile removal and driving could affect water quality through turbidity (addressed above) as well as through mechanisms such as creosote releases or pile breakage. Standard BMPs for pile removal will be followed during any such activities. Furthermore, in areas where mounded sediment is not present pile voids will be backfilled with clean sand to prevent releases of remnant creosote. In areas where mounded sediment is present along the toe of the existing breakwater, pile voids will be left to infill naturally so as not to exacerbate the mounded condition by adding additional sand and creating a hazard to navigation.

Adherence to these BMPs would make the likelihood and potential for harm during in-water work and pile removal so low as to be insignificant. Overall, potential turbidity and chemical contamination is not expected to adversely affect any aquatic species or habitat within the vicinity of the Project.

The Project will remove ~~900~~ 898 creosote-treated timber pile, averaging 12-inch diameter, and 33 12-inch and 16-inch diameter steel piles (~~933~~ 931 pile total), resulting in the elimination of creosote within the nearshore aquatic habitat of the Project area. The removal of creosote-treated wood will benefit both water and sediment quality long-term in the immediate Project area, providing a benefit to aquatic habitat.

Removal of the existing timber pile wall breakwater and replacement with a floating breakwater will allow tidal currents to naturally flush through the marina. This will result in an improvement of water quality within the marina over the long-term. In addition, the reestablishment of tidal currents within the marina will improve sediment transport along the shoreline adjacent to the marina, improving habitat conditions for mapped forage fish spawning beaches near the Project Area. Additionally, installation of the proposed FLUPSY will result in an improvement in water quality through increased water circulation and shellfish seed filtration of nutrients and particulates from the water.

Overall, the Project will remove creosote from the nearshore, reestablish tidal currents through the site, and provide filtration of nutrients and particulates from the water, all of which will improve water and sediment quality in the long term. This may indirectly benefit the existing aquatic habitat and species utilizing the nearshore.

4 MITIGATION SEQUENCING

4.1 IMPACT AVOIDANCE

The existing timber pile breakwater is dilapidated and in need of total replacement. Many of the creosote-treated timber pile have deteriorated and broken off or have become displaced from the timber walers connecting the pile. Walers and cable wrap are missing in many locations, and many of the batter pile are no longer in contact with the walers. Because the structure provides the necessary wave protection for the Port's existing marina, avoiding potential impacts from the Project by not replacing the breakwater is not feasible.

4.2 IMPACT MINIMIZATION

To minimize impacts from replacement of the breakwater, several design options were considered and their potential for impacts to the aquatic environment was assessed. Options for the design of the new breakwater included a cantilever wall, a batter pile wall, and a floating breakwater.

The cantilever wall design would include the installation of a combination of Z sheets and steel pipe pile. This wall would be similar in design and function to the existing wall, resulting in a tall visual barrier at low tide, numerous driven pile (>100 pile), and a solid impediment to tidal flushing and fish migration within the marina. The batter pile wall, also similar to the existing wall, would consist of sheet pile with supporting batter pipe pile. The batter pile wall design would also result in a tall visual barrier at low tide, numerous driven pile (>100 pile), and a solid barrier to tidal flushing and fish migration.

The design alternative selected for the project was the floating breakwater. This design includes the use of preexisting floating concrete pontoons. This design provides no visual barrier and allows for tidal circulation within the marina to increase water quality. It also would not present a physical barrier to fish migration. Furthermore, the use of a floating breakwater is consistent with the regulatory preferences stated in the State Hydraulic Code (WAC 220-660-400). The proposed use of the floating pontoon breakwater will minimize the effects to aquatic nearshore habitat by minimizing the number of steel pipe pile necessary (72 piles) and by allowing tidal flushing to improve water quality within the marina and along the shoreline.

Impacts associated with construction of the new breakwater would also be minimized through the use of floating pontoons and grated decking where feasible. The use of the floating pontoons will minimize shading of the shallow subtidal habitat to the extent practicable, relative to the existing vertical timber wall. Additionally, the decking of the main walk float extension and the finger floats would be grated in compliance with WAC 220-660-400. This would result in an effective reduction of shaded area of ~~1,863~~ 1,688 sq ft (Table 1). This reduction in shaded area would minimize impacts to the shallow subtidal and subtidal habitat at the site.

4.2.1 General Best Management Practices

The following management recommendations and Best Management Practices (BMPs) will be implemented to minimize the risk of impacts to the aquatic environment throughout breakwater construction and demolition.

- Timing restrictions specifying that construction must occur when juvenile salmonids are absent or present in very low numbers in the adjacent waterbody would be strictly observed. All timing restrictions that may be established by WDFW, USACE, NOAA Fisheries, or USFWS would be strictly observed (USACE permit and HPA). For this project, the anticipated work window is July 16 to February 15.
- Water quality standards and procedures that limit the impact of turbidity to a defined mixing zone would be observed (WAC 173-201A).
- Project construction will be completed in compliance with WAC 173-201A.
- Any discharge of oil, fuel or chemicals into state waters is prohibited (WAC 173-201A).
- Fuel hoses, oil drums, oil or fuel transfer valves and fittings, etc., shall be checked regularly for drips or leaks, and shall be maintained and stored properly to prevent spills into state waters. Proper security shall also be maintained to prevent vandalism (WAC 173-201A).
- Corrective actions will be taken in the event of any discharge of oil, fuel, or chemicals into the water (WAC 173-201A), including:
    - In the event of a spill, containment and cleanup efforts will begin immediately and be completed as soon as possible, taking precedence over normal work. Cleanup will include proper disposal of any spilled material and used cleanup material.
    - The cause of the spill shall be assessed and appropriate action will be taken to prevent further incidents or environmental damage.
- Spills and/or conditions resulting in distressed or dying fish shall be reported immediately to DOE's Northwest Regional Spill Response Office at (425) 649-7000 (a 24-hour phone number) (WAC 173-201A). Spills of oil or hazardous materials also shall be reported immediately to the National Response Center at 1 (800) 424-8802 and the Washington Emergency Management Division at 1 (800) 258-5990 or 1 (800) OILS-911.
- The project will comply with all water quality restrictions imposed by Ecology and implement corrective measures if temporary water quality standards are exceeded.
- All in-water construction activities (i.e., pile removal/installation, sand placement, rock/debris removal) will be planned to disturb as little sediment as possible.
- Waste materials will not be disposed of waterward of OHWM or allowed to enter waters of the state.
- The contractor will be required to capture any debris associated with Project activities and not allow it to enter Liberty Bay. Debris will be captured using a floating containment boom and/or work skiff operating around the perimeter of the work area. Debris will be disposed of at an approved upland facility.
- The contractor will be responsible for preparation of a Spill Prevention and Control Plan, which will be implemented throughout project construction.
- A spill containment kit, including oil-absorbent materials, will be kept on site during all project construction activities.
- Construction/demolition impacts will be confined to the minimum area necessary.

- Work vessel(s) will not ground out during any construction activities.
- Sand to used to fill pile voids will be washed prior to placement.

4.2.2 BMPs Specific to Pile Driving/Extraction

- Pile will be installed with a vibratory hammer to the greatest extent practicable.
- Pile will be pulled using a vibratory extractor in compliance with the permit conditions to minimize temporary water quality impacts. Hydraulic jets will *not* be used to remove pile.
- In the event of a pile breaking during extraction, it will be cut 2 feet below the mudline.
- Pile will be removed slowly so as to minimize sediment disturbance and turbidity in the water column.
- Prior to extraction the operator will "wake up" pile to break bond with sediment to break the friction between the pile and substrate to minimize sediment disturbance.
- Where possible, extraction equipment will be kept out of the water to avoid "pinching" pile below the water line.
- Pile will not be broken off intentionally by twisting, bending or other deformation.
- Upon removal from substrate the pile will be moved expeditiously from the water into a containment basin. The pile will not be shaken, hosed-off, stripped or scraped off, left hanging to drip or any other action intended to clean or remove adhering material from the pile.
- A containment basin will be constructed of durable plastic sheeting with sidewalls supported by hay bales or other support structure to contain all sediment.
- Vacated pile holes will be filled with clean sand. Pile holes located in areas of mounded sediment will be left to infill naturally so as to avoid creating a hazard to navigation.
- All extracted pile will be disposed of at an appropriate upland facility.

4.3 RESTORATION

Removal of the existing creosote-treated timber pile breakwater and log booms will restore water quality within the marina and vicinity by removing a significant source of toxins from Liberty Bay and by reestablishing tidal currents in the area. The creosote-treated timber pile, originally installed in the 1960's, have continued to leach petroleum hydrocarbons into Liberty Bay resulting in degraded water and sediment quality in the vicinity of breakwater. The proposed project would completely remove all creosote-treated pile (~~900~~ 898 timber pile) associated with the breakwater, and log booms~~, and seaplane base~~. Removal of these pile would result in long-term improvement of water and sediment quality, as the source of toxins would be removed from the environment. In addition, long-term improvement in water quality within the marina would result from the reestablishment of tidal currents through the use of the floating breakwater.

4.4 COMPENSATION

To compensate for the installation of new overwater coverage associated with the floating breakwater, finger floats, main walk extension to AA-dock, ~~sea plane base,~~ FLUPSY and floating restroom, the Port proposes mitigation actions meant to improve habitat conditions at the site. These actions include the removal of ~~933~~ 931 creosote-treated and steel piling, removal of approximately 28,248 sq ft of scour protection rock and debris along the toe of the existing breakwater, removal of approximately 22,290 sq ft of sedimentation and creosote-treated debris at the base of the north and south log boom, removal of ~~four~~ a sunken vessel~~s~~ and concrete debris near the existing breakwater, ~~removal of the existing sea plane base float,~~ removal of moorage floats associated with the existing log boom, and removal of the existing log boom itself (Table 1, Sheet 2). These actions, combined, provide a net increase in aquatic habitat of approximately ~~37,170~~ 37,573 sq ft at the Project site. These actions will compensate for the installation of new overwater coverage.

The mitigation actions proposed by the Port are described in detail in Section 5.

5 MITIGATION ACTIONS

The following sections describe the actions proposed to offset the effects of the Project on the aquatic environment. Refer to Table 1 for a summary of the specific quantities of the mitigation actions compared to the proposed new breakwater components.

5.1 CREOSOTE-TREATED PILE REMOVAL

The proposed Project would involve the removal of a total of ~~933~~ 931 pile, ~~900~~ 898 of which are creosote-treated timber pile. These pile have been present at the site since their installation in the 1960's, and have been leaching petroleum hydrocarbons into the surrounding water column and sediment since that time. The removal of these pile would remove a significant source of toxins from Liberty Bay, and would lead to long-term improvement in water and sediment quality at the site. In addition, removal of these piles will reduce substrate impacts in the intertidal and shallow subtidal zones and contribute to a net reduction of substrate impacts at the site (further described in Section 5.2), allowing epibenthic and benthic organisms to recolonize the area.

Removal of the pile would be done using a vibratory hammer to "wake up" the pile, which would then be hoisted up onto a materials barge. A containment area on the barge would be prepared to ensure runoff or debris from the removed piles would be contained on the barge and not allowed to enter Liberty Bay. BMPs associated with pile removal can be found in Section 4.2.2.

5.2 SCOUR PROTECTION ROCK/DEBRIS REMOVAL

Assessment of the site using multi-beam surveying techniques indicates the presence of scour protection rock and debris mounded up against the toe of the existing breakwater pile (Sheets 2 and 6). This material likely consists of rip rap and quarry spall material, and appears to have been placed to shore up the breakwater and prevent scour and undermining of the breakwater toe. In addition to the rock, debris is also likely present along the toe of the breakwater in some locations. This debris likely consists of broken sections of pile and walers, pieces of cable wrap, and other debris from the failing breakwater. This rock and other debris total approximately 28,248 sq ft of substrate impact based on sonar survey. Additionally, approximately 22,290 sq ft of sedimentation and creosote-treated debris is present at the base of the north and south log boom.

The survey work also revealed the presence of ~~four small vessels~~ sunken vessel debris on the bottom near the existing breakwater and existing sea plane float. ~~These vessels~~ Based on the SAV Survey conducted in July of 2020, one sunken vessel and huge concrete debris are also proposed to be removed, and total approximately 640 sq ft of substrate impact.

Once the existing breakwater has been removed, the Port proposes to remove the mounded rock, debris and vessels from the site. The rock and debris are likely to be removed using a clamshell bucket and the material will be placed on a materials barge to be disposed of at an appropriate upland location. Care will be taken during removal of the material not to suspend significant amounts of silt into the water column. The crane operator will not stockpile materials on the bottom, and will operate in a manner to minimize turbidity. Removal of this material will comply with State water quality standards and approved mixing zones. The methods for removal of the vessel~~s~~ will likely be dependent on their condition.

Removal of the mounded rock, debris and vessels from the site will improve habitat quality at the site, while also removing a potential hazard for safe vessel navigation within the marina. Removal of the rock and debris will re-expose native sand and silt substrate, allowing epibenthic and benthic organisms to recolonize the area. Also, removal of the debris material and vessel~~s~~ will remove sources of contaminants from Liberty Bay. This mitigation action will result in long-term habitat improvement at the site and result in a net reduction of substrate impacts and hard armoring of approximately ~~51,797~~ 51,795 sq ft. These mitigation actions will overall result in a net increase in aquatic habitat of ~~37,170~~ 37,573 sq ft, replacing anthropogenically-altered intertidal and shallow subtidal substrate with restored aquatic habitat.

5.3 OVERWATER COVER AND SHADING REMOVAL

In addition to removal of the pile associated with the existing breakwater~~,~~ and breakwater log boom areas, ~~and the seaplane base~~ (which total approximately ~~776~~ 774 sq ft of substrate impact), as well as removal of a sunken vessel~~s~~ and concrete debris (640 sq ft substrate impact), anthropogenic rock and debris (28,248 sq ft substrate impact), and sedimentation with creosote-treated debris at the base of the north and south log booms (approximately 22,290 sq ft) from the intertidal and shallow subtidal zones, the Port proposes to remove an additional ~~8,570~~ 8,000 sq ft of overwater coverage from the site (Table 1). The overwater coverage proposed to be removed includes the moorage floats, batter pile, and overwater structures associated with the existing breakwater, breakwater log boom off the West breakwater, the breakwater log boom itself off the West breakwater, and a portion of the southeast log boom located off of the South breakwater~~, and the existing sea plane base float located near the shoreline in the northern portion of the marina~~ (Sheet 2).

The batter pile and overwater structures (i.e., whalers, crows nest extension platform, etc.,) associated with the existing breakwater to be removed are located at approximately -8 to -9 ft MLLW. Removal of these structures would remove approximately 1,892 sq ft of shading impacts and compensate for a portion of the installation of the new floating breakwater and associated floats while removing a significant source of toxins from Liberty Bay, leading to long-term improvement in water and sediment quality at the site.

The floats and batter pile associated with the existing north log boom to be removed are located at -10 ft MLLW (Sheet 2). Rather than relocating the floats to the new breakwater, the Port proposes to remove these floats from the aquatic environment to reduce the amount of overwater cover on the site. The batter pile associated with the south log boom to be partially removed are located from 0 MLLW to -9 MLLW (Sheet 2). A portion of the south log boom will be removed for the installation of the breakwater access float to AA dock. Removal of these floats and associated batter pile will reduce shading impacts at the site by approximately 6,107 sq ft in the intertidal and shallow subtidal zones and compensate for a portion of the installation of the new floating breakwater and associated floats.

~~In addition, the Port is electing to remove the existing sea plane base float after installation of the new sea plane base float on the new breakwater. This action may occur in a subsequent phase of the project, after installation of the new breakwater and floats. The existing float is located along the north shoreline of the marina at approximately -4 ft MLLW (Sheet 2). This float occasionally grounds out during extreme low tides, and is located very near the promenade of Liberty Bay Park. Removal~~

~~of this solid-decked float would remove approximately 570 sq ft of shading impacts from intertidal habitat along the shoreline, improving shoreline habitat functions in this area.~~

Removal of the existing timber pile wall breakwater will remove a significant source of shading from the marina. In addition to batter pile and overwater structure associated with the existing breakwater, the roughly east-west orientation of the existing breakwater throws a significant amount of shadow to the north of the breakwater wall. This contributes to reduced productivity in this area. Replacement of the solid wall with a floating breakwater will greatly reduce the amount of shading in the area, as the floating pontoons will allow light to pass beneath them.

6 MITIGATION ADEQUACY AND PRESERVATION

6.1 MITIGATION ADEQUACY FOR THE BREAKWATER REPLACEMENT

The long-term impacts associated with installation of the proposed floating breakwater include overwater coverage/shading from the breakwater pontoons and associated floats, and the piling installed to support the floats. These impacts total approximately ~~23,354~~ 22,379 sq ft of area and are located at approximately -10 to -12 ft MLLW.

The Federal Services, in cooperation with the U.S. Army Corps of Engineers, have developed a model for use with Regional General Permit (RGP) 6 permitting and ESA consultation (NMFS Reference Number WCR-2016-4361, and USFWS Reference Number 01EWFW00-2016-F-0565). This model is for use in determining mitigation requirements for the permitting of residential docks in Puget Sound. While the model has been calibrated using project assumptions that are not applicable to this project (e.g., 12" steel pile and reduced float dimensions), it does provide a framework with which to gauge the adequacy of the mitigation provided by the Project, both in terms of the design of the project and the additional actions proposed by the Port.

The RGP-6 Compensatory Mitigation Calculator (Version: April 20, 2018) calculates the amount of required mitigation to compensate for impacts under the RGP-6 program. The calculator includes factors such as the amount of submerged aquatic vegetation present (i.e., eelgrass and macroalgae), forage fish spawning habitat, and the location and design of the proposed dock/pier. The calculator also separates impacts based on the location of the impact including riparian, upper shore, lower shore, and deeper shore zones.

As a means of evaluating the adequacy of the mitigation proposed for this Project (including minimization, restoration and compensation actions described above), the calculator was used to estimate the mitigation "debits" generated by the proposed project (see Exhibit A). Using the calculator's "required mitigation" spreadsheet, the following inputs were utilized to calculate project "debits":

- The project will install approximately ~~21,491~~ 22,379 sq ft of new overwater coverage (~~adjusted for grating~~ square feet of floats and piling per RGP-6 instructions) within the Deep Shore Zone (DSZ) (entered under *DSZ Impacts)* and includes installation of the new floating breakwater~~, sea plane base,~~ main walk float extension, finger floats, FLUPSY, and floating restroom.
- The project is located within a pocket estuary, Liberty Bay, (entered under *other debiting factors*)

To assess the "value" of the mitigation proposed by the Project, the various mitigation options outlined in the calculator were reviewed. Using the calculator's proposed mitigation spreadsheet, the following inputs were utilized to calculate project "credits":

- A total of ~~900~~ 898 creosote-treated piles will be removed from the Lower Shore Zone as a result of removal of the existing breakwater, removal of the existing log boom off of the West breakwater, and removal of a portion of the existing log boom off of the South breakwater (entered under *pile removal, creosote etc.,*).
- A total of 33 steel piles will be removed from the Lower Shore Zone (LSZ) as a result of removal of the existing breakwater (entered under *pile removal, steel etc.,)*

- The project is located within a pocket estuary, Liberty Bay, (entered under *other crediting factors*)
- The site includes sparse (<10%) coverage of non-kelp macroalgae (entered as scenario 0 under *LSZ Mitigation, SAV),*
- The project will remove ~~8,570~~ 8,000 sq ft of existing solid-decked floats from the LSZ as a result of removal of overwater structures on the existing breakwater, removal of the existing log boom off of the South breakwater, and removal of a portion of the existing log boom off of the West breakwater~~, and removal of the existing sea plane base~~ (entered under *LSZ Mitigation, floats, remove solid-decked float*).
- Forage fish habitat is not located within the project area (entered under *LSZ Mitigation, Habitat, Floats, Forage Fish Factor)*

In addition to the proposed mitigation input described above, the project includes other mitigative measures that had no equivalent within the RGP-6 calculator and are therefore not part of the mitigation credits calculated. This includes:

- Removal of 28,248 sq ft of scour protection rock and debris mounded up against the toe of the existing breakwater pile (Sheets 2 and 6), including removal of rip rap and quarry spall material, broken sections of pile and walers, pieces of cable wrap, and other debris from the failing breakwater.
- Removal of 22,290 sq ft of sedimentation and creosote-treated debris mounded up against the base of the existing north and south log booms (Sheets 2 and 6).
- Removal of ~~four~~ sunken vessel~~s~~ and concrete debris, approximately 640 sq ft.

A summary of required MPs (debit) and proposed MPs (credit) are provided in Table 2 as follows:

Table 2: Summary of Mitigation Points (MPs) utilizing USACE RGP-6 Calculator

Project Item	Debit MPs	Credit MPs
Mitigation Debits		
New Overwater Coverage in DSZ	~~388.24~~ 404.22	0
Other Debiting Factors	~~194.12~~ 202.11	0
Mitigation Credits		
Removal of Creosote-Treated Piles in LSZ	0	~~900.00~~ 898.00
Removal of Steel Piles in LSZ	0	16.50
Removal of Solid-Decked Floats in LSZ	0	~~66.93~~ 62.55
Other Debiting Factors	0	~~491.72~~ 488.52
Total	**~~582.36~~ 606.33**	**~~1,475.15~~ 1,465.57**

Based on RGP-6 calculator inputs, a total of ~~582.36~~ 606.33 MPs are required and ~~1,475.15~~ 1,465.57 MPs are proposed for the project. While it is understood that there are significant caveats to using the RGP-6 calculator in this way, it does provide a rough comparison of the ecological value of removing the existing breakwater compared with construction of the proposed breakwater. Furthermore, this analysis does not include significant mitigation measures including removal of scour rock and debris as well as removal of sunken vessels. Incorporating these and the other mitigation actions proposed would result in a significant enhancement of water quality and habitat conditions at the site over the existing condition.

7 REFERENCES

Grette Associates, LLC. 2019. Port of Poulsbo Breakwater Rehabilitation Project: Critical Areas Report. Prepared for the Port of Poulsbo, July 16, 2019.

Grette Associates, LLC. 2019. Port of Poulsbo Breakwater Rehabilitation Project: Mitigation Plan (Preliminary Design). Prepared for the Port of Poulsbo, July 2019

U.S. Environmental Protection Agency (USEPA). 2008. Reregistration Eligibility Decision (RED) Document for Creosote: Case 0139. EPA # 739-R-08-007. September 25, 2008.

Washington Department of Fish and Wildlife (WDFW). 2019. Marine Beach Spawning Fish Ecology: Spawning Location Map. Website located at : https://wdfw.wa.gov/fishing/management/marine-beach-spawning. Accessed on May 29, 2019.

Sheets

S23 T26N R1E

WASHINGTON KEY MAP

SHEET INDEX

SHEET NO.	TITLE
1	COVER SHEET & PROJECT LOCATION
2	EXISTING PLAN & DEMOLITION
3	EXISTING SITE PHOTOS
4	PROPOSED SITE PLAN
5	BREAKWATER PLAN
6	SECTIONS
7	RESTROOM PLAN & ELEVATION
8	BREAKWATER DETAILS
9	WAVE FENCE ELEVATION & SECTION
10	PLUMB & BATTER PILE DETAIL
11	ACCESS & FINGER FLOAT DETAILS / ANCHOR PILE DETAIL

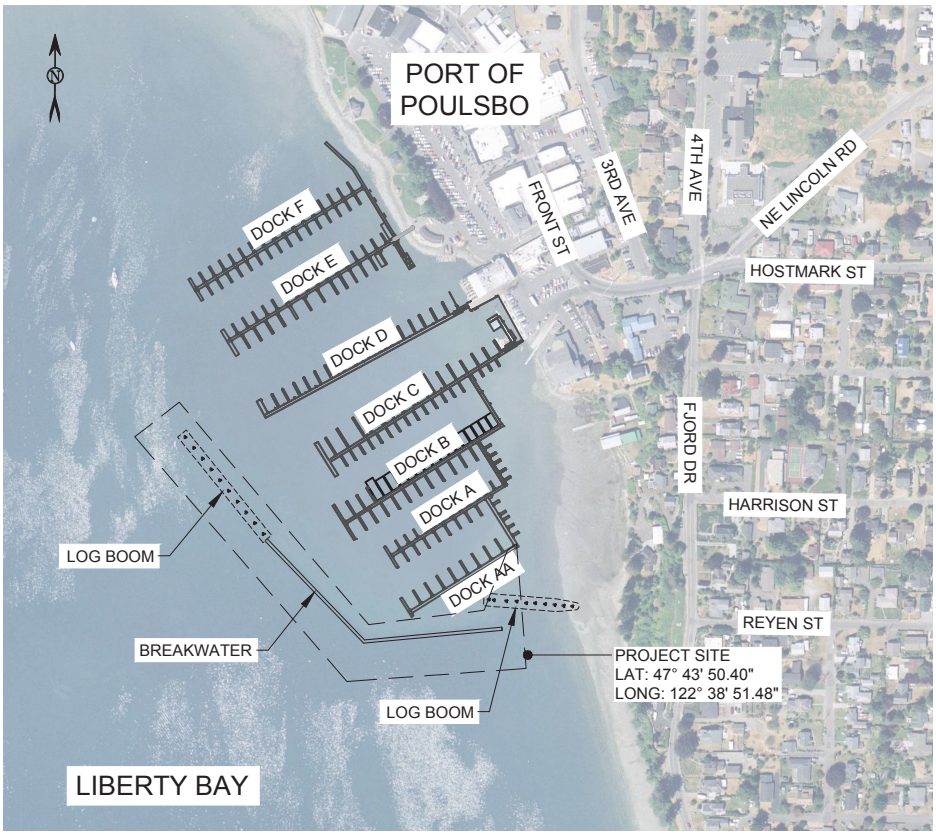

LOCATION MAP

0 250 500
SCALE IN FEET

REVISION NOTES:

1. REVISED BY SOUNDWEST ENGINEERING ASSOCIATES OCTOBER 2020 TO: ELIMINATE PROPOSED RELOCATION OF SEAPLANE FLOATS, MAKE MINOR REVISIONS TO SUNKEN VESSEL NOTATIONS BASED ON SAV SURVEY COMPLETED JULY 2020, AND MAKE COMPLIANT WITH WAC 240-660-400.

2. THESE JARPA DRAWINGS WERE DEVELOPED TO MEET CORPS SUBMITTAL REQUIREMENTS AND, DUE TO FORMATTING RESTRICTIONS, ARE MORE SCHEMATIC IN NATURE. PLEASE REFER TO FULL SIZE PROJECT DESIGN DRAWINGS FOR ADDITIONAL DESIGN DETAILS.

PURPOSE: REPLACE BREAKWATER

DATUM: MLLW

ADJACENT PROPERTY OWNERS:

1. CITY OF POULSBO
2. PORT OF POULSBO
3. SEA DISCOVERY CENTER
4. N. MANOCHEHR
5. G. STRANGE
6. A. STEWART
7. M. MEFFERD
8. S. & C. STANDARD
9. B. & B. RINDAL
10. NET SHED PARK

PORT OF POULSBO BREAKWATER REHABILITATION PROJECT

COVER SHEET

APPLICATION BY:
PORT OF POULSBO

PROPOSED: REPLACE BREAKWATER, ~~RELOCATE SEAPLANE BASE FLOAT~~, AND EXTEND DOCK AA FOR PUBLIC ACCESS

IN: POULSBO

AT: LIBERTY BAY

COUNTY: KITSAP

SHEET 1 OF 11

SEE REVISION NOTES, SHEET 1

DATE: JUNE 2020

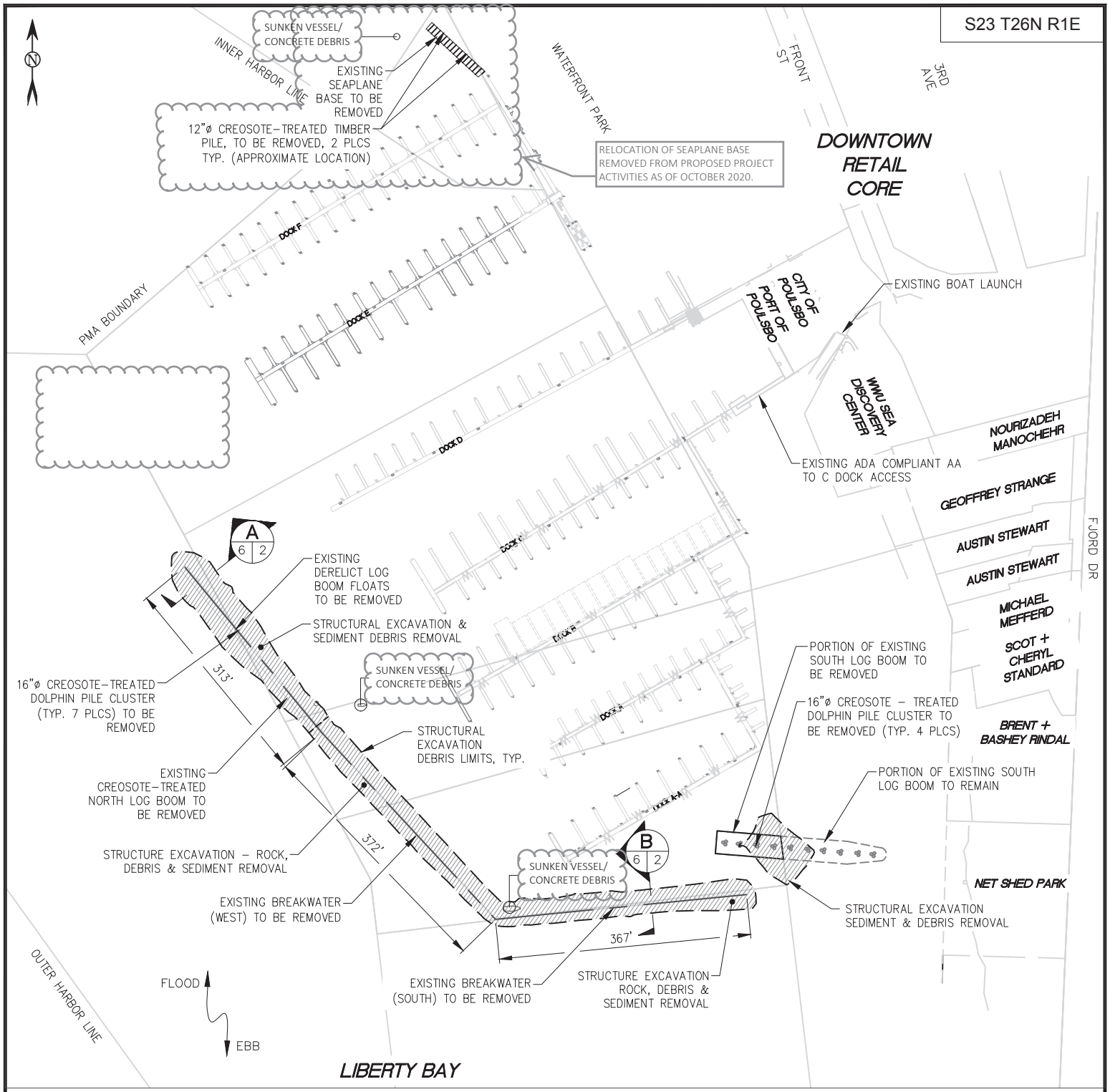

EXISTING SITE PLAN + DEMOLITION

0 100 200
SCALE IN FEET

TIDAL WATER LEVELS (MLLW)

MEAN HIGHER HIGH WATER (MHHW)	+11.7'
MEAN HIGH WATER (MHW) / HIGH TIDE LINE (HTL)	+10.85'
MEAN LOWER LOW WATER (MLLW)	0.0'

PURPOSE: REPLACE BREAKWATER

DATUM: MLLW

ADJACENT PROPERTY OWNERS:

1. CITY OF POULSBO
2. PORT OF POULSBO
3. SEA DISCOVERY CENTER
4. N. MANOCHEHR
5. G. STRANGE
6. A. STEWART
7. M. MEFFERD
8. S. & C. STANDARD
9. B. & B. RINDAL
10. NET SHED PARK

PORT OF POULSBO
BREAKWATER
REHABILITATION PROJECT

EXISTING SITE PLAN & DEMOLITION

APPLICATION BY:
PORT OF POULSBO

PROPOSED: REPLACE BREAKWATER, ~~RELOCATE SEAPLANE BASE FLOAT~~, AND EXTEND DOCK AA FOR PUBLIC ACCESS

IN: POULSBO

AT: LIBERTY BAY

COUNTY: KITSAP

SHEET 2 OF 11

SEE REVISION NOTES, SHEET 1

DATE: JUNE 2020

S23 T26N R1E

SOUTH BREAKWATER (A)

NORTH LOG BOOM (B)

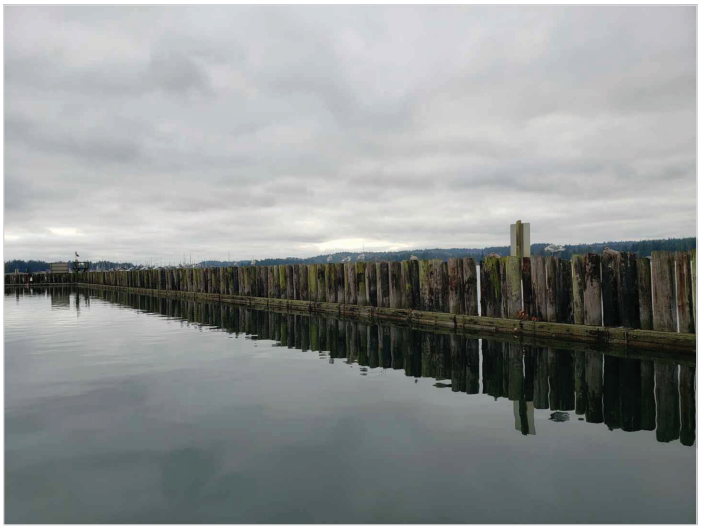

WEST BREAKWATER (C)

CROWS NEST, TYP (D)

DERELICT FLOATS (E)

SOUTH LOG BOOM (F)

PURPOSE: REPLACE BREAKWATER

DATUM: MLLW

ADJACENT PROPERTY OWNERS:

1. CITY OF POULSBO
2. PORT OF POULSBO
3. SEA DISCOVERY CENTER
4. N. MANOCHEHR
5. G. STRANGE
6. A. STEWART
7. M. MEFFERD
8. S. & C. STANDARD
9. B. & B. RINDAL
10. NET SHED PARK

PORT OF POULSBO
BREAKWATER
REHABILITATION PROJECT

EXISTING SITE PHOTOS

APPLICATION BY:
PORT OF POULSBO

PROPOSED: REPLACE BREAKWATER, ~~RELOCATE SEAPLANE BASE FLOAT~~, AND EXTEND DOCK AA FOR PUBLIC ACCESS

IN: POULSBO

AT: LIBERTY BAY

COUNTY: KITSAP

SHEET 3 OF 11

SEE REVISION NOTES, SHEET 1

DATE: JUNE 2020

S23 T26N R1E

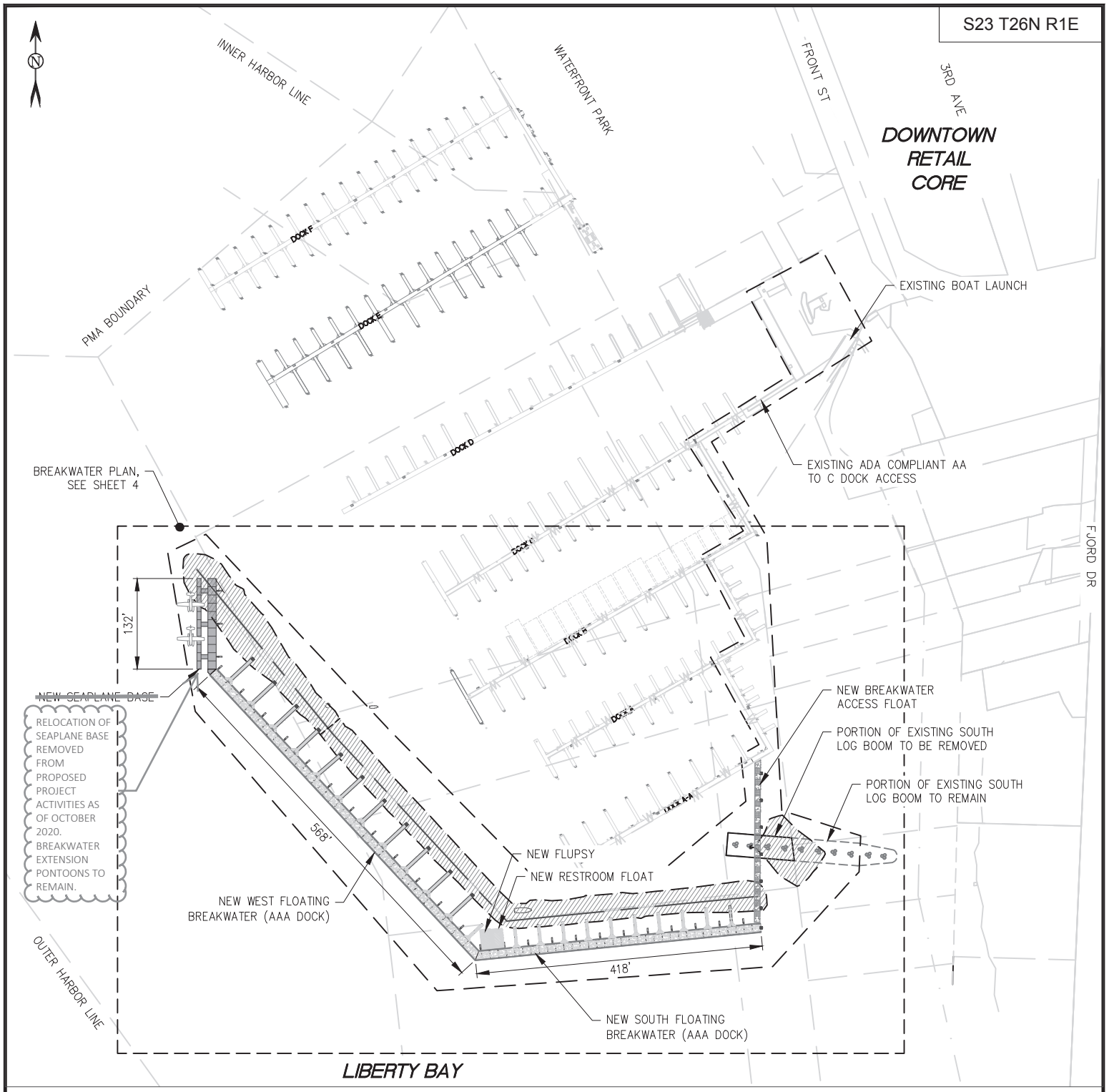

PROPOSED SITE PLAN

0 100 200
SCALE IN FEET

TIDAL WATER LEVELS (MLLW)

MEAN HIGHER HIGH WATER (MHHW)	+11.7'
MEAN HIGH WATER (MHW) / HIGH TIDE LINE (HTL)	+10.85'
MEAN LOWER LOW WATER (MLLW)	0.0'

PURPOSE: REPLACE BREAKWATER

DATUM: MLLW

ADJACENT PROPERTY OWNERS:

1. CITY OF POULSBO
2. PORT OF POULSBO
3. SEA DISCOVERY CENTER
4. N. MANOCHEHR
5. G. STRANGE
6. A. STEWART
7. M. MEFFERD
8. S. & C. STANDARD
9. B. & B. RINDAL
10. NET SHED PARK

PORT OF POULSBO
BREAKWATER
REHABILITATION PROJECT

PROPOSED SITE PLAN
APPLICATION BY:
PORT OF POULSBO

PROPOSED: REPLACE BREAKWATER, ~~RELOCATE SEAPLANE BASE FLOAT~~, AND EXTEND DOCK AA FOR PUBLIC ACCESS

IN: POULSBO

AT: LIBERTY BAY

COUNTY: KITSAP

SHEET 4 OF 11

SEE REVISION NOTES, SHEET 1

DATE: JUNE 2020

S23 T26N R1E

NEW SEAPLANE DOCK

RELOCATION OF SEAPLANE BASE REMOVED FROM PROPOSED PROJECT ACTIVITIES AS OF OCTOBER 2020. BREAKWATER EXTENSION PONTOONS TO REMAIN.

132'-0"

NEW 20"ø PLUMB & BATTER PILES TYP, 3 PLACES

C 5 6

A 5 11

D 4 6

NEW WEST FLOATING BREAKWATER

STRUCTURAL EXCAVATION LIMITS

NEW 20"ø PLUMB & BATTER PILES (50' FINGER PIERS), TYP, 11 PLACES

NEW GRATED 5'X50' FINGER PIERS (11 PLCS, TYP)

NEW 15' X 30' FLUPSY

NEW 17' X 29' FLOATING RESTROOM

NEW GRATED 3'X30' FINGER PIERS (11 PLCS, TYP)

B 5 11

20" ø STEEL PILES, PLUMB AND BATTER, TYP.

NEW SOUTH FLOATING BREAKWATER

A 5 8

568'

418'

FLOOD

EBB

LIBERTY BAY

DOCK B

DOCK A

DOCK AA

DOCK A-A

LOG BOOM DEMOLITION, SEE SHEET 2

STRUCTURAL EXCAVATION LIMITS

NEW 8' X 236' BREAKWATER ACCESS FLOAT TO AA-DOCK, GRATED PER WAC 220-660-400

20"ø PLUMB PILES, PLUMB W/ PILE HOOP, TYP, 7 PLACES

N

TIDAL WATER LEVELS (MLLW)

MEAN HIGHER HIGH WATER (MHHW)	+11.7'
MEAN HIGH WATER (MHW) / HIGH TIDE LINE (HTL)	+10.85'
MEAN LOWER LOW WATER (MLLW)	0.0'

PROPOSED SITE PLAN

0 50 100

SCALE IN FEET

PURPOSE: REPLACE BREAKWATER

DATUM: MLLW

ADJACENT PROPERTY OWNERS:

1. CITY OF POULSBO
2. PORT OF POULSBO
3. SEA DISCOVERY CENTER
4. N. MANOCHEHR
5. G. STRANGE
6. A. STEWART
7. M. MEFFERD
8. S. & C. STANDARD
9. B. & B. RINDAL
10. NET SHED PARK

PORT OF POULSBO BREAKWATER REHABILITATION PROJECT

BREAKWATER PLAN

APPLICATION BY:
PORT OF POULSBO

PROPOSED: REPLACE BREAKWATER, ~~RELOCATE SEAPLANE BASE FLOAT,~~ AND EXTEND DOCK AA FOR PUBLIC ACCESS

IN: POULSBO

AT: LIBERTY BAY

COUNTY: KITSAP

SHEET 5 OF 11

SEE REVISION NOTES, SHEET 1

DATE: JUNE 2020

S23 T26N R1E

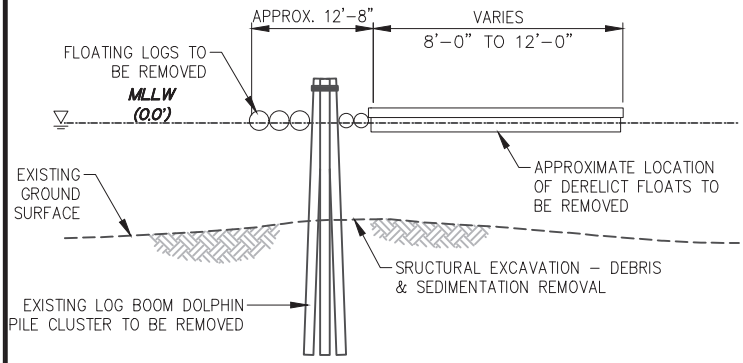

A 2 6 SECTION
REMOVAL OF EXISTING LOG BOOM
0 10 20
SCALE IN FEET

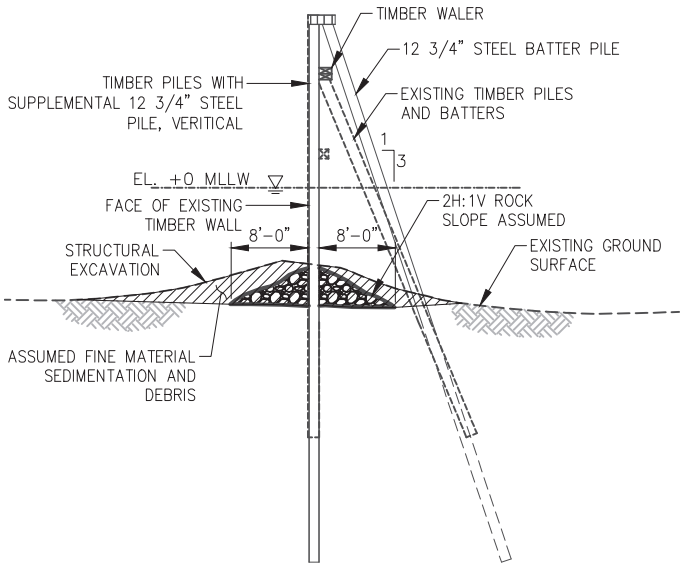

B 2 6 SECTION
REMOVAL OF EXISTING BREAKWATER
0 10 20
SCALE IN FEET

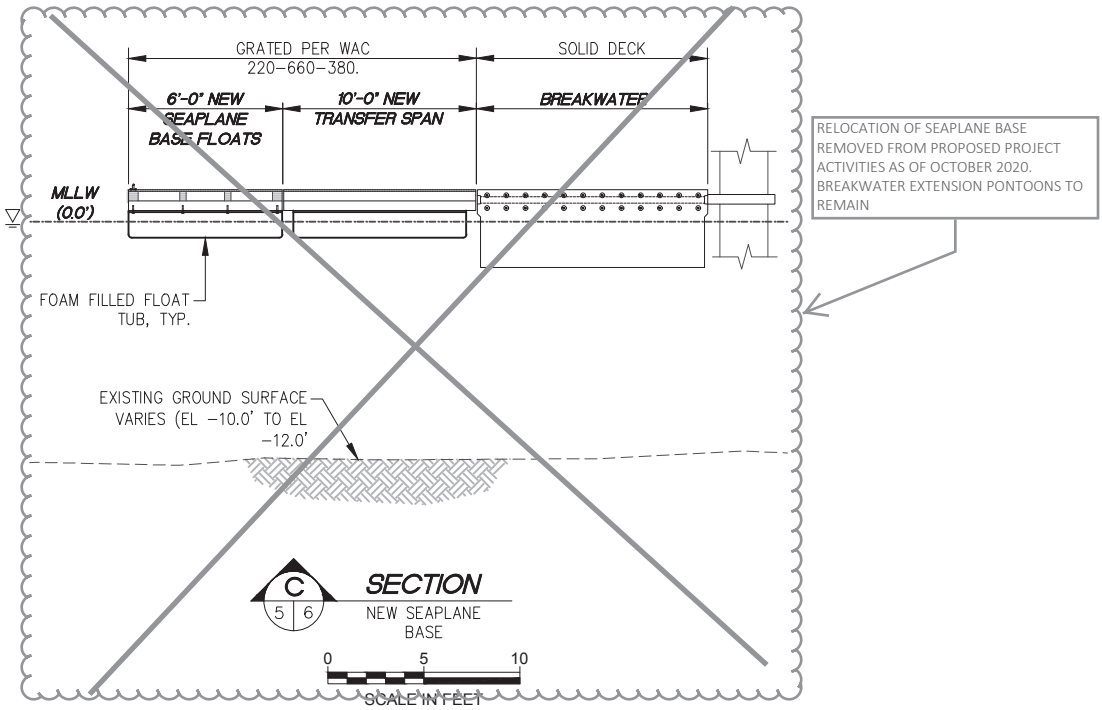

PURPOSE: REPLACE BREAKWATER

DATUM: MLLW

ADJACENT PROPERTY OWNERS:

1. CITY OF POULSBO
2. PORT OF POULSBO
3. SEA DISCOVERY CENTER
4. N. MANOCHEHR
5. G. STRANGE
6. A. STEWART
7. M. MEFFERD
8. S. & C. STANDARD
9. B. & B. RINDAL
10. NET SHED PARK

PORT OF POULSBO BREAKWATER REHABILITATION PROJECT

SECTIONS

APPLICATION BY:
PORT OF POULSBO

PROPOSED: REPLACE BREAKWATER, ~~RELOCATE SEAPLANE BASE FLOAT~~, AND EXTEND DOCK AA FOR PUBLIC ACCESS

IN: POULSBO

AT: LIBERTY BAY

COUNTY: KITSAP

SEE REVISION NOTES, SHEET 1

SHEET 6 OF 11

DATE: JUNE 2020

S23 T26N R1E

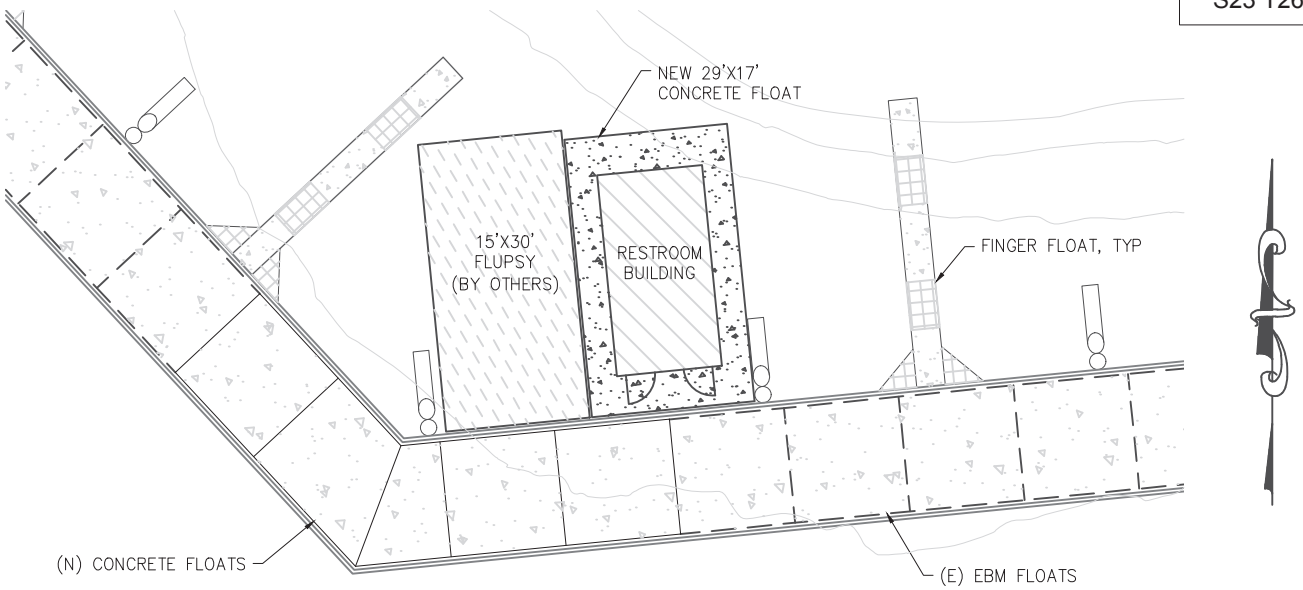

PARTIAL PLAN 1 XX

0 10 20
SCALE

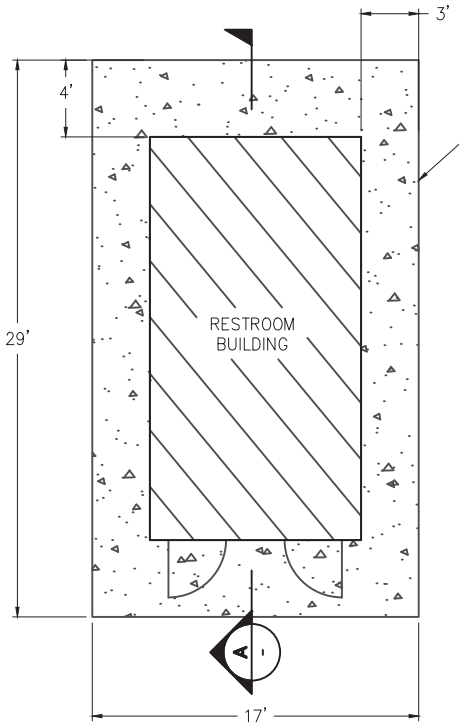

0 5 10
SCALE

RESTROOM PLAN 2 –

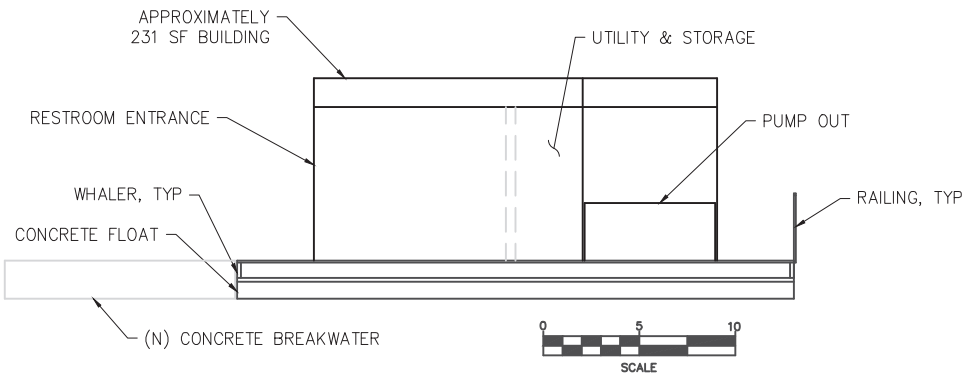

0 5 10
SCALE

RESTROOM ELEVATION A –

PURPOSE: REPLACE BREAKWATER
5

DATUM: MLLW

ADJACENT PROPERTY OWNERS:

1. CITY OF POULSBO
2. PORT OF POULSBO
3. SEA DISCOVERY CENTER
4. N. MANOCHEHR
5. G. STRANGE
6. A. STEWART
7. M. MEFFERD
8. S. & C. STANDARD
9. B. & B. RINDAL
10. NET SHED PARK

PORT OF POULSBO BREAKWATER REHABILITATION PROJECT

RESTROOM PLAN & ELEVATION

APPLICATION BY:
PORT OF POULSBO

PROPOSED: REPLACE BREAKWATER, ~~RELOCATE SEAPLANE BASE FLOAT~~, AND EXTEND DOCK AA FOR PUBLIC ACCESS

IN: POULSBO

AT: LIBERTY BAY

COUNTY: KITSAP

SEE REVISION NOTES, SHEET 1

SHEET 7 OF 11

DATE: JUNE 2020

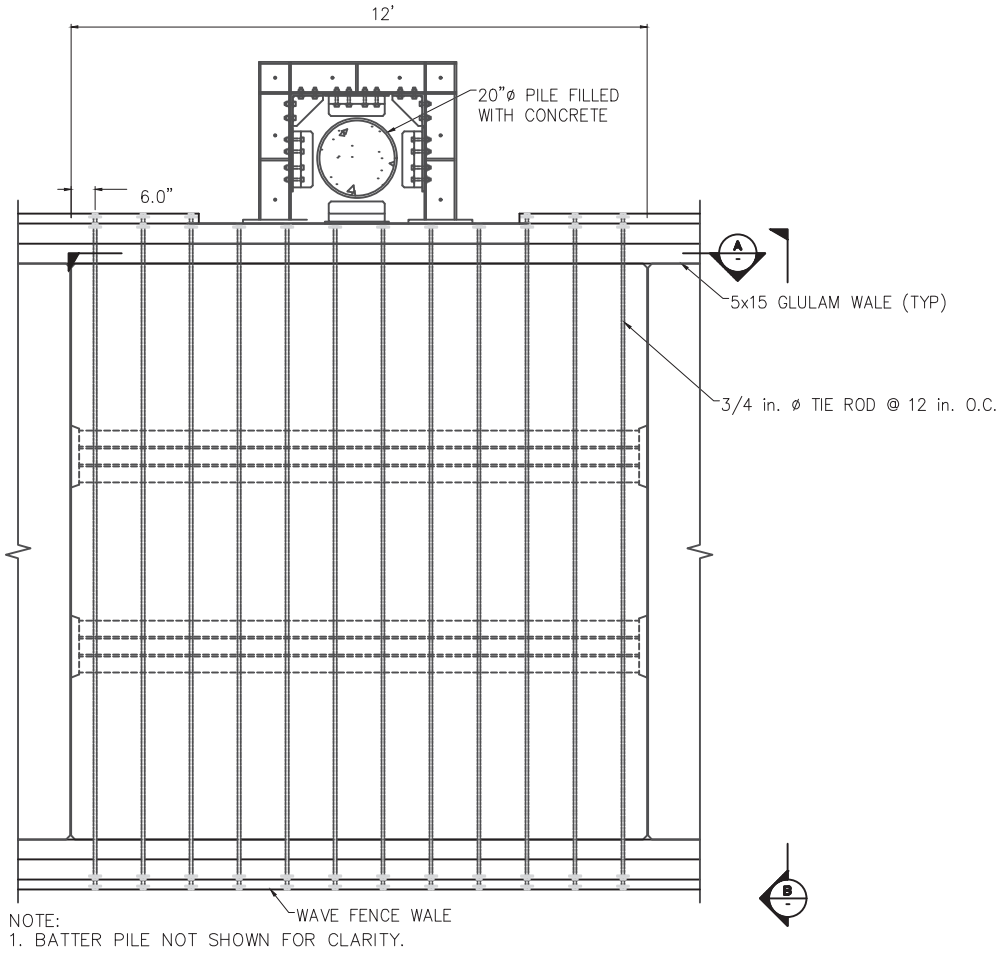

NOTE:
1. BATTER PILE NOT SHOWN FOR CLARITY.

TYPICAL BREAKWATER FLOAT
PLAN (1)

0 1/8" 1/4"
SCALE

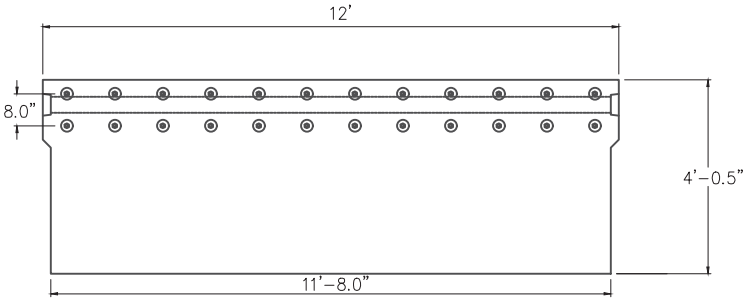

CONCRETE BREAKWATER PONTOON
SECTION (A)

0 1/8" 1/4"
SCALE

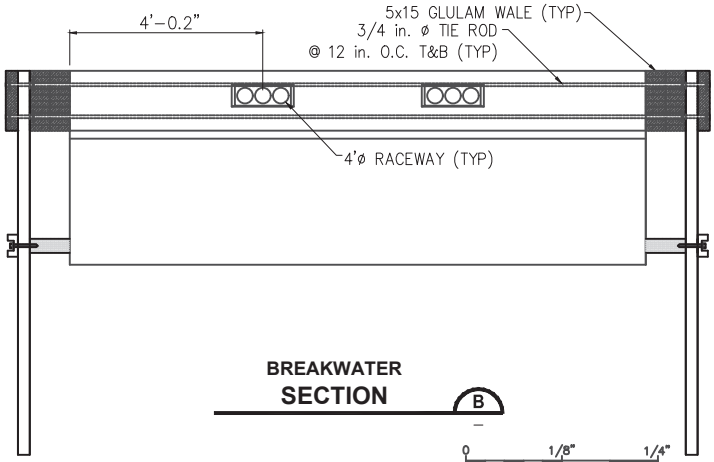

BREAKWATER
SECTION (B)

0 1/8" 1/4"
SCALE

PURPOSE: REPLACE BREAKWATER

DATUM: MLLW

ADJACENT PROPERTY OWNERS:

1. CITY OF POULSBO
2. PORT OF POULSBO
3. SEA DISCOVERY CENTER
4. N. MANOCHEHR
5. G. STRANGE
6. A. STEWART
7. M. MEFFERD
8. S. & C. STANDARD
9. B. & B. RINDAL
10. NET SHED PARK

PORT OF POULSBO BREAKWATER REHABILITATION PROJECT

BREAKWATERN DETAILS

APPLICATION BY:
PORT OF POULSBO

PROPOSED: REPLACE BREAKWATER, ~~RELOCATE SEAPLANE BASE FLOAT~~, AND EXTEND DOCK AA FOR PUBLIC ACCESS

IN: POULSBO

AT: LIBERTY BAY

COUNTY: KITSAP

SEE REVISION NOTES, SHEET 1

SHEET 8 OF 11

DATE: JUNE 2020

S23 T26N R1E

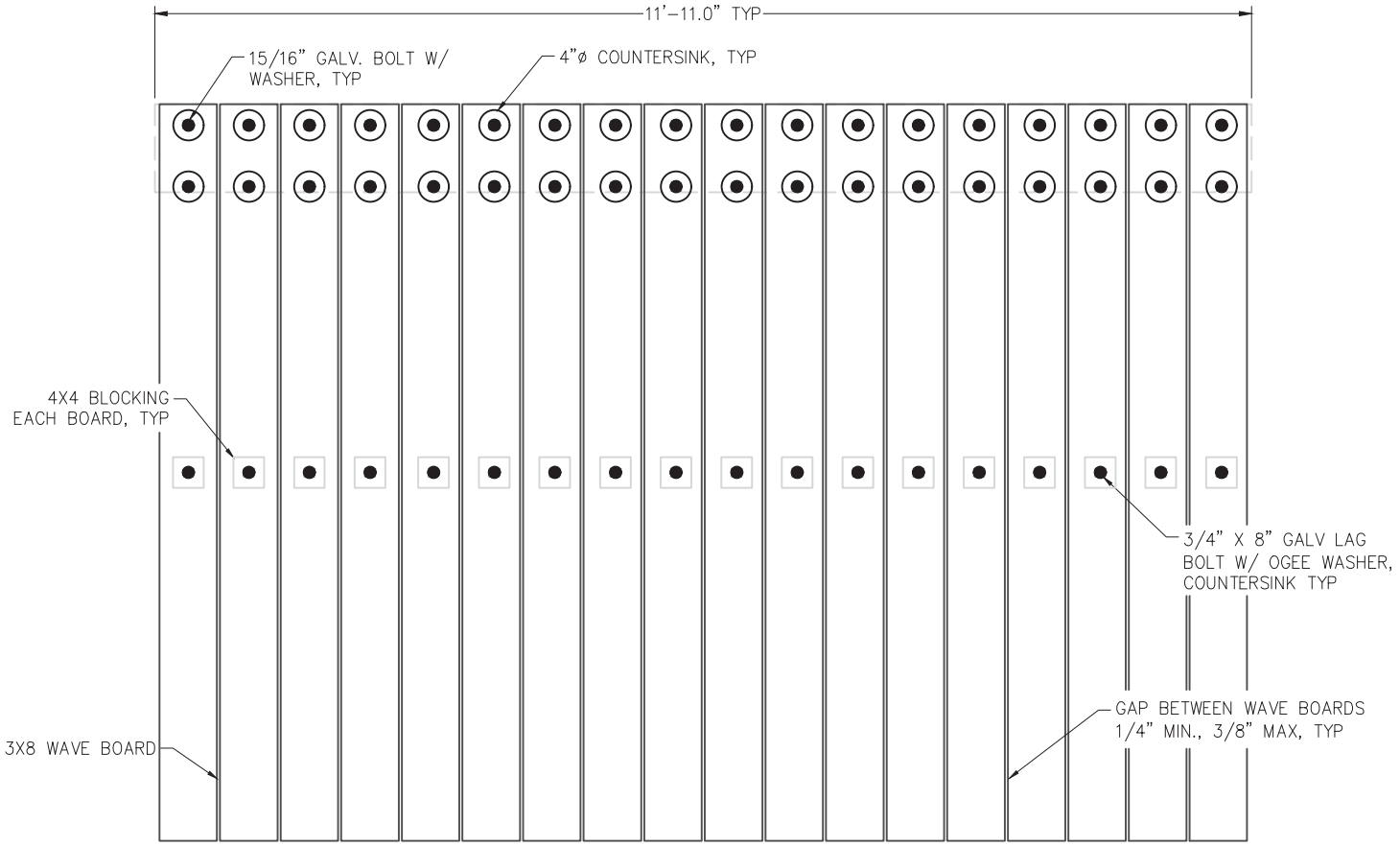

WAVE FENCE ELEVATION (A)

SCALE 0 1/4" 1/2"

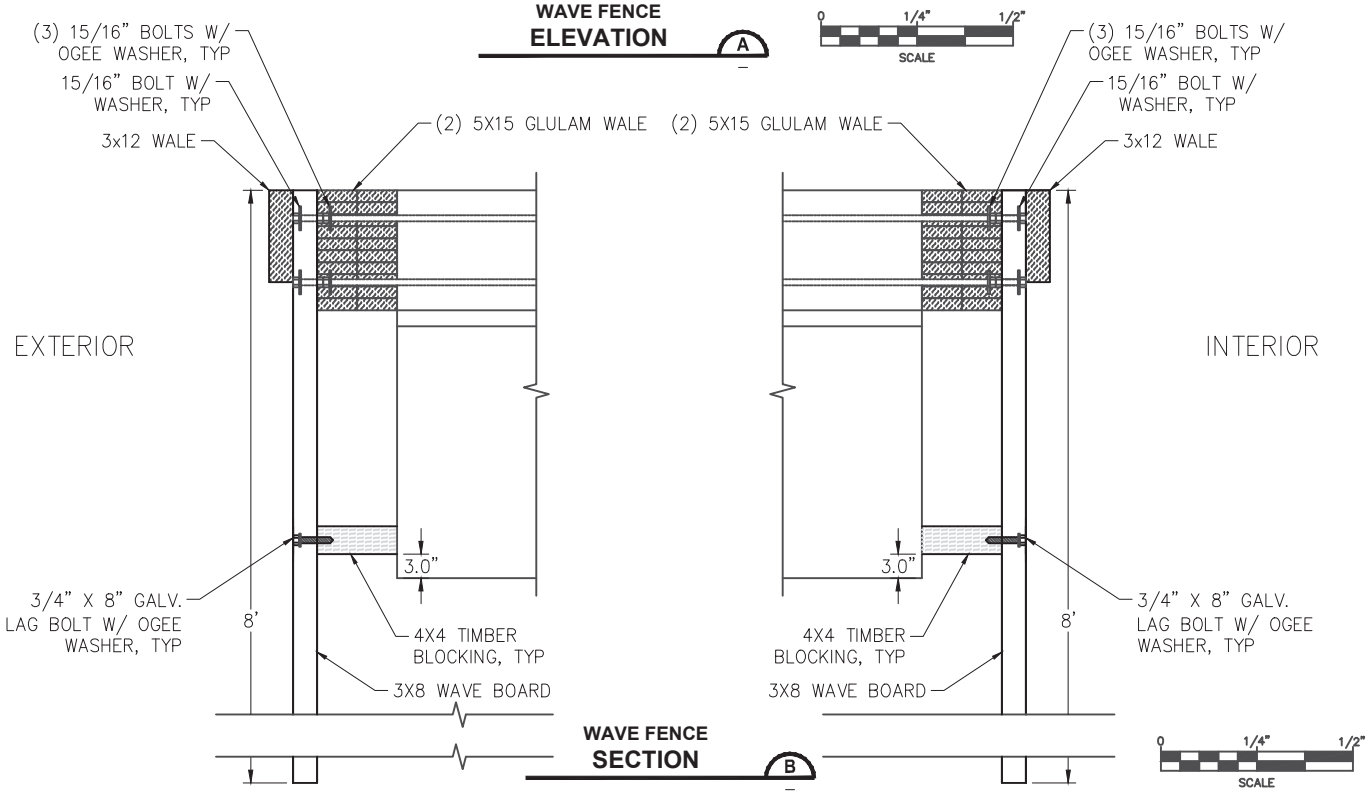

WAVE FENCE SECTION (B)

SCALE 0 1/4" 1/2"

PURPOSE: REPLACE BREAKWATER

DATUM: MLLW

ADJACENT PROPERTY OWNERS:

1. CITY OF POULSBO
2. PORT OF POULSBO
3. SEA DISCOVERY CENTER
4. N. MANOCHEHR
5. G. STRANGE
6. A. STEWART
7. M. MEFFERD
8. S. & C. STANDARD
9. B. & B. RINDAL
10. NET SHED PARK

PORT OF POULSBO BREAKWATER REHABILITATION PROJECT

WAVE FENCE ELEVATION & SECTION

APPLICATION BY:
PORT OF POULSBO

PROPOSED: REPLACE BREAKWATER, ~~RELOCATE SEAPLANE BASE FLOAT~~, AND EXTEND DOCK AA FOR PUBLIC ACCESS

IN: POULSBO

AT: LIBERTY BAY

COUNTY: KITSAP

SEE REVISION NOTES, SHEET 1

SHEET 9 OF 11

DATE: JUNE 2020

S23 T26N R1E

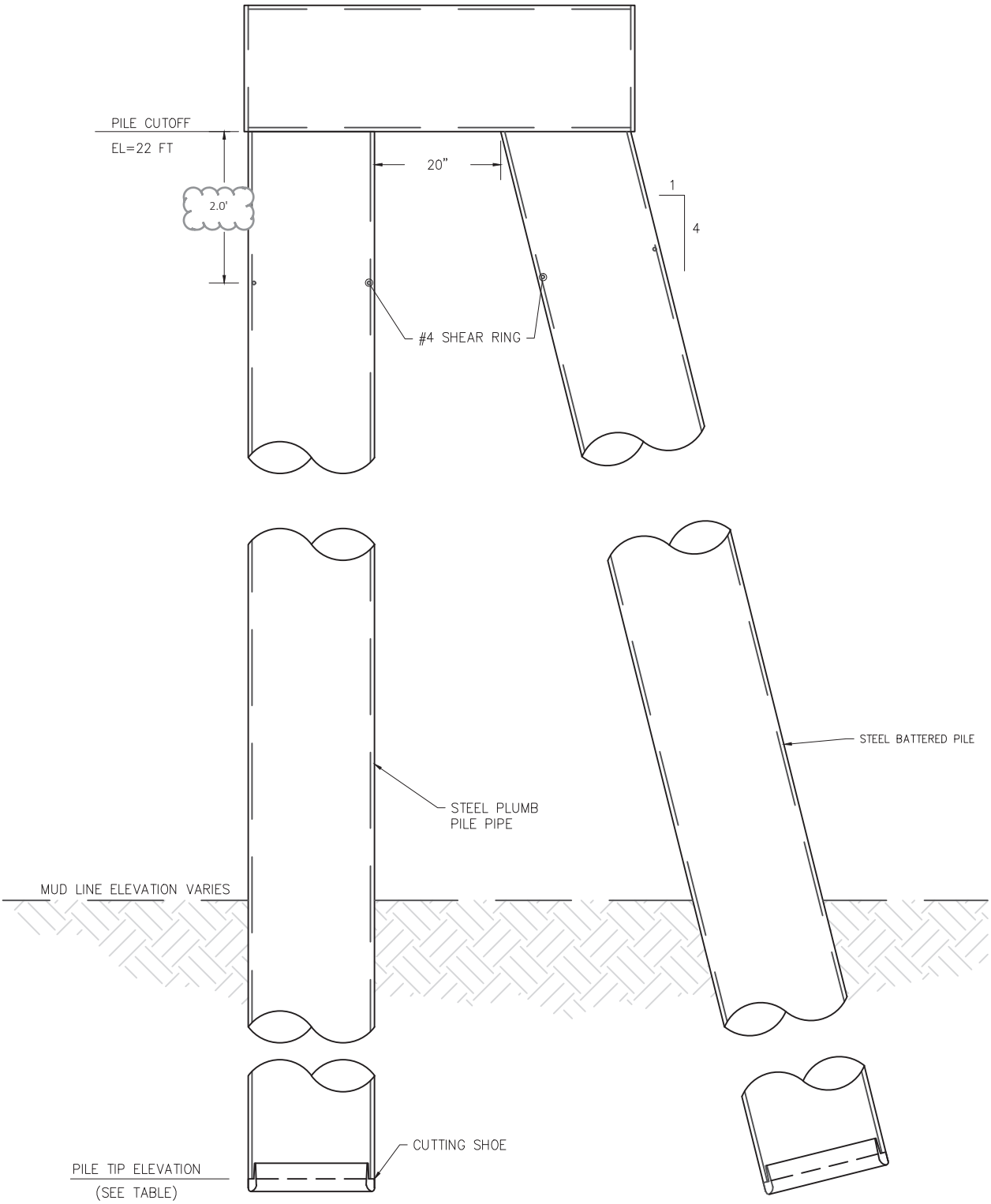

PLUMB & BATTER PILE
DETAIL 1

0 0.5 1
SCALE

PURPOSE: REPLACE BREAKWATER

DATUM: MLLW

ADJACENT PROPERTY OWNERS:

1. CITY OF POULSBO
2. PORT OF POULSBO
3. SEA DISCOVERY CENTER
4. N. MANOCHEHR
5. G. STRANGE
6. A. STEWART
7. M. MEFFERD
8. S. & C. STANDARD
9. B. & B. RINDAL
10. NET SHED PARK

PORT OF POULSBO
BREAKWATER
REHABILITATION PROJECT

PLUMB & BATTER PILE DETAIL

APPLICATION BY:
PORT OF POULSBO

PROPOSED: REPLACE BREAKWATER, ~~RELOCATE SEAPLANE BASE FLOAT~~, AND EXTEND DOCK AA FOR PUBLIC ACCESS

IN: POULSBO

AT: LIBERTY BAY

COUNTY: KITSAP

SEE REVISION NOTES, SHEET 1

SHEET 10 OF 11

DATE: JUNE 2020

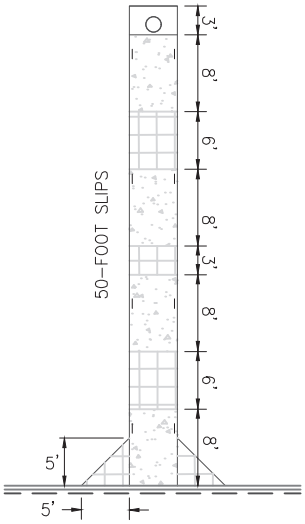

50' FINGER FLOAT GRATING
TYPICAL 1/5

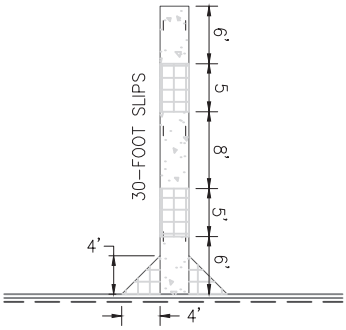

30' FINGER FLOAT GRATING
TYPICAL 2/5

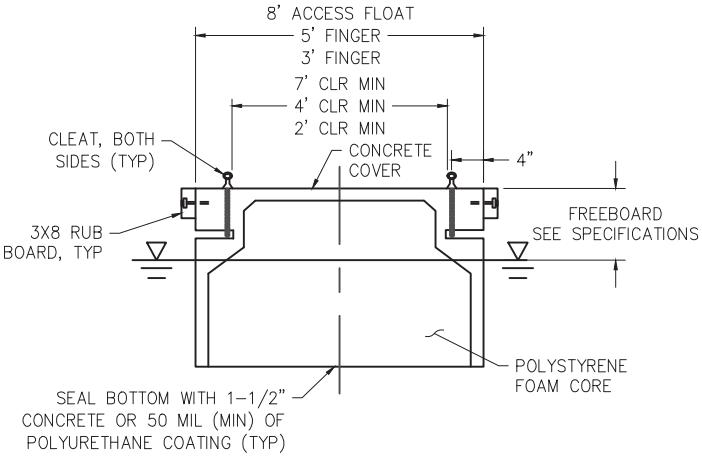

ACCESS & FINGER FLOAT
SECTION, TYP A/–
NTS

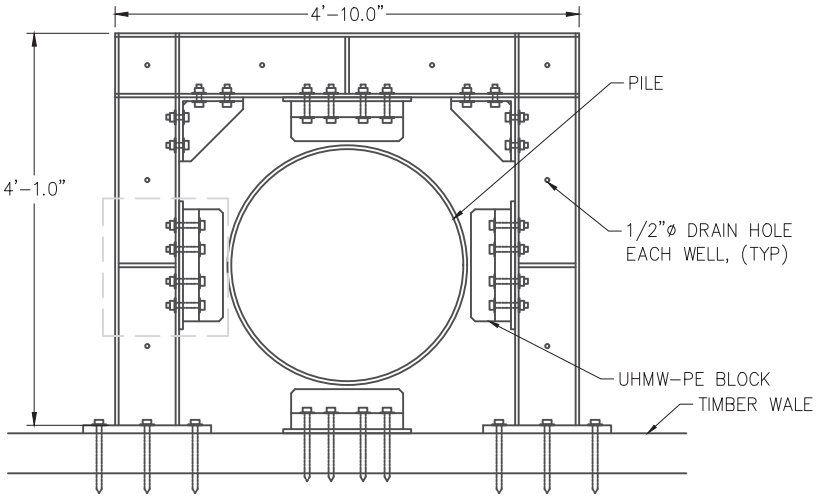

ANCHOR PILE COLLAR
PLAN A 3/5

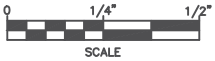

PURPOSE: REPLACE BREAKWATER

DATUM: MLLW

ADJACENT PROPERTY OWNERS:

1. CITY OF POULSBO
2. PORT OF POULSBO
3. SEA DISCOVERY CENTER
4. N. MANOCHEHR
5. G. STRANGE
6. A. STEWART
7. M. MEFFERD
8. S. & C. STANDARD
9. B. & B. RINDAL
10. NET SHED PARK

PORT OF POULSBO BREAKWATER REHABILITATION PROJECT

ACCESS & FINGER FLOAT DETAILS /ANCHOR PILE DETAIL

APPLICATION BY:
PORT OF POULSBO

PROPOSED: REPLACE BREAKWATER, ~~RELOCATE SEAPLANE BASE FLOAT~~, AND EXTEND DOCK AA FOR PUBLIC ACCESS

IN: POULSBO

AT: LIBERTY BAY

COUNTY: KITSAP

SEE REVISION NOTES, SHEET 1

SHEET 11 OF 11

DATE: JUNE 2020

Exhibit A: U.S. Army Corps of Engineers RPG-6 Calculator

Reference # **N/A**
Project Name Breakwater Rehabilitation Project
Prepared on: 6/9/2020 (Rev. October 2020)

Marine Overwater Structure Mitigation Calculation Tool (RGP-6, Appendix B)

This tool can be used to estimate mitigation required under the Regional General Permit (RGP) 6 (See RGP-6 Appendix B). In addition this tool can be used to estimate mitigate requirements for similar projects in inland-marine waters. Before proposing compensatory mitigation, the applicant MUST first demonstrate that impacts to waters of the U.S., including special aquatic sites have been avoided then minimized (in that order) to the maximum extent possible. To calculate compensatory mitigation requirements, briefly describe the project and then enter the applicable information into the Required Mitigation tab. This will report the number of Mitigation Points (MPs) required for the project. Next, on the Proposed Mitigation tab, briefly describe the mitigation proposal and enter the applicable information. Some mitigative measures yield MPs on a case-by-case basis. Discuss these options with your Regulatory Project Manager. Return to the cover sheet to review the totals and any remaining mitigation requirement.

	Mitigation Points	DSAYS
Total Required Mitigation (Appendix B, Table 2)	**606.33**	**6.0633**
Total Proposed Mitigation (Appendix B, Table 3)	**1465.57**	**14.6557**
Remaining Mitigation Points Required	**0.00**	**0.0000**

SHORE ZONES	***Description***
Riparian Zone	HTL to 50 feet landward of HTL
Upper Shore Zone (USZ)	HTL to +5 feet MLLW
Lower Shore Zone (LSZ)	+5 feet MLLW to -10 feet MLLW and limits of SAV
Deeper Shore Zone (DSZ)	Deeper than -10 feet MLLW or outer limits of SAV

Appendix B: Table 1

VEGETATION SCENARIO	***Native Eelgrass and/or Kelp occurs within 25 feet of project area***	***Other SAV occurs within 25 feet of project area (no native eelgrass or kelp present)***
Scenario 0	N/A	≤ 10%
Scenario 1	1-25% Combined SAV	11-25%
Scenario 2	26-69% Combined SAV	26-75%
Scenario 3	≥ 70% Combined SAV	> 75%

*SAV defined as rooted vascular plants and attached macroalgae. Drift algae and *Ulva spp*. Are not included when determining cover percentage except where *Ulva spp*. occurs in documented herring spawning areas.

EXAMPLE: Site has 25% Native eelgrass and 45% other SAV (total 70 % cover) within 25 feet of project area. Select Scenario 3 from Column 1 because native eelgrass is present.

Total Required Mitigation

Brief description of proposed project

See project Mitigation Plan, dated June 9, 2020 (Revision October 2020).

	Impact	Units	Qty	Mitigation Points
	RIPARIAN ZONE IMPACTS			
Shoreline Impacts	Vegetation removal adjacent to soft shorelines (including soft bioengineered shorelines): Enter SF of woody vegetation with a DBH > 4 in riparian work strip to be permanently cleared for access to overwater structure.	SF of woody vegetation permanently cleared	0	0.00
	UPPER SHORE ZONE (USZ) IMPACTS			
	Pier			
Standard Structure (Pile Spacing & Habitat)	If the pier is fully grated and width is < 4 feet for single use or < 6 feet for joint-use, no mitigation points.	SF of structure	0	0
	Piles are spaced closer than 40 feet apart	Yes or No	0	N/A
	Project is located in documented sand lance or surf smelt spawning habitat	Yes or No	0	N/A
Oversized Structure	If the USZ pier is fully grated and width is > 4 feet for single use or > 6 feet for joint-use, enter SF of structure. (may be required for ADA Access).	SF of structure	0	0.00
		Number of all pier pilings in USZ.	0	
Solid-decked Structure	If the pier in the USZ has solid-decking, include the SF of solid-decked portion of the structure here (Does not qualify for RGP-6). If the structure also exceeds width requirements, enter any grated SQFT of pier above.	SF of solid-deck structure	0	0.00
		Number of all pier pilings in USZ.	0	

Overwater Structure Mitigation

Version: 8/27/2018

	Impact	Units	Qty	Mitigation Points
	USZ Forage Fish Factor (for oversized or solid-decked structures)			
Habitat	Forage Fish Factor: Project is located in documented or potential sand lance or surf smelt spawning habitat. Forage Fish Maps	Yes or No	0	0.00
	LOWER SHORE ZONE (LSZ) IMPACTS			
SAV	**Must enter vegetation scenario for LSZ (See table 1)**	**Enter Vegetation Scenario 0-3**	0	**N/A**
	Piers & Piles			
Standard Structure	If the pier is fully grated and width is ≤ 4 feet for single use or ≤ 6 feet for joint-use, enter the SF of structure. No MPs accrued if vegetation scenario 0-2.	SF of structure	0	0.00
Oversized Structure	If the pier in the LSZ is fully grated and width is > 4 feet for single use or > 6 feet for joint-use, enter SF of structure.	SF of structure	0	0.00
		Number of all pier pilings in LSZ.	0	
Solid-decked Structure	If the pier in the LSZ is proposed to include solid-decking, include the SF of solid-decked portion of the structure here (Does not qualify for RGP-6). If the structure also exceeds width requirements, enter grated SQFT of pier above.	SF of solid-deck structure	0	0.00
		Number of all pier pilings for piers with solid decking, only in LSZ.	0	
	Floats			
Structure	Enter the SF of float(s), including access float, located in LSZ where the float is 50% grated with 60% or more open space and there are 8 or less piles.	SF of structure	0	0.00
	Floating Watercraft Lifts			
Structure	Enter the SF of floating watercraft lifts located in the LSZ.	SF of pontoon	0	0.00

Overwater Structure Mitigation

Version: 8/27/2018

	Impact	Units	Qty	Mitigation Points
	LSZ Forage Fish Factor			
Habitat	If the project is located in documented or potential herring spawning habitat, enter Yes, otherwise No. Forage Fish Maps	Yes or No	0	0.00
	DEEPER SHORE ZONE (DSZ) IMPACTS			
Structure	Enter the square feet of floats located in the DSZ.	SF of structure	22379	404.22
	REQUIRED MITIGATION SUB-TOTAL			**404.22**
	OTHER DEBITTING FACTORS			
Habitat	If the project is located within a pocket estuary, bluff-backed beach, or pocket beach, enter Yes, otherwise No. Coastal Atlas Map	Yes or No	yes	202.11
	If the project is located within a Major Estuary Zone (see Corps webpage for zone mapping), enter Yes, otherwise No. Major Estuary Zone Maps	Yes or No	no	0.00
	TOTAL REQUIRED MITIGATION			**606.33**

MITIGATION CREDITS

Brief description of proposed mitigation

See project Mitigation Plan, dated June 9, 2020 (Revision October 2020).

	Mitigation Option	Units	Qty	Mitigation Points (Credit)
		Riparian Planting		
Shoreline Plantings	Plant native woody vegetation (within 10 feet of bulkhead)	Planted area in SF	0	0.00
	Plant native woody vegetation (within 10 feet of natural shoreline)	Planted area in SF	0	0.00
		Spawning Gravel		
Beach Nourishment	Placement of beach nourishment (forage fish habitat improvement). Credit given if required or recommend by WDFW. Typically linear placement waterward of bulkhead	LF of Shoreline for placement	0	N/A
	Erosion Potential	Calculated Score	0	N/A
	Shoretype Score	Enter score from below	0	
	Fetch Score	Enter score from below	0	

CUMULATIVE RISK MODEL

EROSION POTENTIAL

Shoretype	Score	Fetch	Score
No Appreciable Drift (NAD)-Bedrock/Low Energy	0	0–1 mile	1
Modified, Accretion Shoreform, NAD-Delta	1		
NAD- Artificial , Transport Zone, Pocket Beach	2	1–5 miles	2
Feeder Bluff	3	5–15 miles	3
Feeder Bluff Exceptional	4	15+ miles	4
Erosion Potential Score = Shoretype Score + Fetch Score			

	Optional			
	Placement of beach nourishment in an irregular polygon (not common). Case-by-case evaluation. Provide SF of placement area and erosion potential (above)	Placement area in SF	0	N/A
		Large Woody Material (LWM)		
LWM	Install large woody material anchored in USZ (measure area of potential effect)	Placement area in SF	0	0.00
		Remove Piles		

Overwater Structure Mitigation

Version: 8/27/2018

		Mitigation Option	Units	Qty	Mitigation Points (Credit)
Pile Removal		Remove non-treated wood, concrete, plastic, steel piles, or creosote stub / broken pile	Number of piles	33	16.50
		Remove creosote-treated piles	Number of piles	898	898.00
		Install Float Stops			
Float Stops		Install float stops on existing float that currently grounds out (does not count if float is being removed)	SF of existing structure	0	0.00
		Remove Existing Old Structures (Constructed more than 25 years ago)			
		UPPER SHORE ZONE (USZ) MITIGATION			
Remove Existing "Old" Structures	Grated Pier	Remove existing pier in USZ: Enter SF for fully grated structure if width is > 4 feet for single use or > 6 feet for joint-use.	SF of structure	0	0.00
	Solid-decked Pier	Remove existing pier in USZ. Enter SF of solid surface, only (assumes vegetation scenario 0). Additional credit may be granted if removal is proposed in high quality SAV scenario. Piling removal counted separately.	SF of solid-decking on elevated pier in USZ.	0	0.00
	Float or Lift	Remove old float or floating watercraft lift in USZ (assumes vegetation scenario 0). Additional credit may be granted if removal is proposed in high quality SAV scenario. Piling removal counted separately.	SF of solid-decking on float or area of pontoons on lifts in USZ	0	0.00
	Habitat	Forage Fish Factor: Project is located in documented or potential sand lance or surf smelt spawning habitat.	Yes or No	0	0.00
		LOWER SHORE ZONE (LSZ) MITIGATION			
Existing "Old" Structures	SAV	**Must enter vegetation scenario for LSZ (See table 1)**	**Enter Vegetation Scenario in LSZ**	0	**N/A**
		Piers			
	Grated Pier	Removal of fully grated pier sections in the LSZ with width > 4 feet for single use or > 6 feet for joint-use; enter SF of grated portions of pier.	SF of structure	0	0.00
	Solid-decked Pier	Removal of pier in LSZ with solid-decking, include the SF of solid-decked portion of the structure here. If the structure also exceeds width requirements, enter grated SF of pier above.	SF of solid-deck structure	0	0.00
		Floats			
	Grated Float	Remove grated float (assumes 50% grated surface) including pilings.	SF of existing grated float in LSZ	0	0.00

Overwater Structure Mitigation

Version: 8/27/2018

		Mitigation Option	Units	Qty	Mitigation Points (Credit)
Remove Ex	Solid-decked Float/Lift	Remove solid-decked float or watercraft lift in LSZ. Piling removal counted separately.	SF of existing solid-decked float or watercraft lift in LSZ	8000	62.55
	Habitat	Forage Fish Factor: Project is located in documented or potential herring spawning habitat.	Yes or No	no	0.00
		DEEP SHORE ZONE (DSZ) MITIGATION			
	Structure	Remove structure in DSZ	SF of existing structure in DSZ	0	0.00

Overwater Structure Mitigation

Version: 8/27/2018

Remove Existing Functional Structures

(Constructed within the last 25 years)

		Mitigation Option	Units	Qty	Mitigation Points (Credit)
UPPER SHORE ZONE (USZ) MITIGATION					
Remove Existing Functional Structures	Grated Pier	Remove existing pier in USZ: Enter SF for fully grated structure if width is > 4 feet for single use or > 6 feet for joint-use.	SF of structure	0	0.00
Remove Existing Functional Structures	Solid-decked Pier	Remove existing pier in USZ (vegetation scenario 0): Enter SF of solid-decked portion of the structure here. If the structure also exceeds width requirements, enter any grated SF of pier above.	SF of solid-deck structure	0	0.00
Remove Existing Functional Structures	Float or Lift	Remove existing float or boat lift in USZ (assumes vegetation scenario 0). Additional credit may be granted if removal is proposed in high quality SAV scenario. Piling removal counted separately.	SF of solid-decking on float in USZ	0	0.00
Remove Existing Functional Structures	Habitat	Forage Fish Factor: Project is located in documented or potential sand lance or surf smelt spawning habitat.	Yes or No	0	0.00
LOWER SHORE ZONE (LSZ) MITIGATION					
Remove Existing Functional Structures	SAV	**Must enter vegetation scenario for LSZ (See table 1)**	**Enter Vegetation Scenario in LSZ**	0	**N/A**
		Piers			
	Grated Pier	Removal of fully grated pier sections in the LSZ with width > 4 feet for single use or > 6 feet for joint-use; enter SF of grated portions of pier.	SF of structure	0	0.00
	Solid-decked Pier	Removal of in the LSZ with solid-decking, include the SF of solid-decked portion of the structure here. If the structure also exceeds width requirements, enter grated SF of pier above.	SF of solid-deck structure	0	0.00
		Floats			
	Grated Float	Remove grated float (assumes 50% grated surface) including pilings.	SF of existing grated float in LSZ	0	0.00
	Solid-decked Float/Lift	Remove solid-decked float or watercraft lift in LSZ	SF of existing solid-decked float or watercraft lift in LSZ	0	0.00

Overwater Structure Mitigation

Version: 8/27/2018

	Mitigation Option	Units	Qty	Mitigation Points (Credit)
Habitat	Forage Fish Factor: Project is located in documented or potential herring spawning habitat.	Yes or No	0	0.00

Overwater Structure Mitigation

Version: 8/27/2018

		Mitigation Option	Units	Qty	Mitigation Points (Credit)
		DEEP SHORE ZONE (DSZ) MITIGATION			
	Structure	Remove structure in DSZ	SF of existing structure in DSZ	0	0.00
		Remove Existing Bank Stabilization / Groin / Debris			
Shoreline Restoration	Remove Stabilization / Groin	Remove existing bank stabilization and plant	LF removed and planted	0	0.00
		Remove entire existing manmade groin	SF of groin removed	0	0.00
		Replacement of hardened bank stabilization with pocket beach	Case-by-Case		
	Remove Ramp/Debris/Rail	Complete or partial removal of boat ramp	SF of boat ramp	0	0.00
		Removal of concrete/metal debris	SF of concrete debris removed	0	0.00
		Removal of creosote debris (uncommon)	CY of creosote material removed	0	0.00
		Complete or partial removal of marine railway	Case-by-Case		
	Habitat	Forage Fish Factor: Bank stabilization, boat ramp, or debris removal occurs in documented or potential forage fish spawning (surf smelt/sand lance in USZ, herring in LSZ)	Yes or No	0	0.00
		Other	Case-by-Case		
		Mitigation Debit Sub-Total			**977.05**
		OTHER CREDITING FACTORS			
	Habitat	If the project is located within a pocket estuary, bluff-backed beach, or pocket beach, enter Yes, otherwise No. Coastal Atlas Map	Yes or No	yes	488.52
		If the project is located within a Major Estuary Zone (see Corps webpage for zone mapping), enter Yes, otherwise No. Major Estuary Zone Maps	Yes or No	no	0.00
		Credit Purchase			
	Credit Purchase	Mitigation Bank or In-Lieu-Fee Credit	Case-by-Case		
		TOTAL PROPOSED MITIGATION			**1465.57**