EXHIBIT W

Anchor QEA Technical Memorandum: Engineering Peer Review 60% Submittal

(January 27, 2021)

DRAFT

1201 3rd Avenue, Suite 2600
Seattle, Washington 98101
206.287.9130

ANCHOR QEA

Memorandum

January 27, 2021

To: Karla Boughton, Marla Powers, and Michael Bateman, City of Poulsbo

From: Randy H. Mason, PE, Anchor QEA, LLC

cc: Heather Page and Marc Auten, Anchor QEA, LLC

Re: Port of Poulsbo Breakwater Replacement
Engineering Peer Review
60% Submittal

Anchor QEA, LLC, has been requested by the City of Poulsbo (City) to provide comments on the adequacy of the Port of Poulsbo's (Port's) designs and supporting documentation. This memorandum provides peer review comments on the Port of Poulsbo's 60% Breakwater Design Drawings issued on October 28, 2020. The 60% Breakwater Design Drawings have been reviewed and marked-up with various comments and concerns (Attachment A). Only drawings within the set that have comments are included in Attachment A. No technical specifications have been provided for review.

It is assumed that the design package will be competitively bid and not be sole-sourced. Some of the details in the design package appear to be proprietary, which could be confusing to bidders. Anchor QEA also recommends that the construction documents be clear regarding the elements of design that are either in performance or prescriptive specification format.

It is understood that these are 60% design drawings and many of the comments outlined in this memorandum may be issues that the Port is already considering for its 100% design. The comments provided below are for the City's and Port's consideration for subsequent phases of design development.

In summary, the main issues noted in the 60% Breakwater Design Drawings are as follows:

- Dock finger connections to wave attenuator
- Location of restroom and floating upweller system (FLUPSY) float and connection details
- Wave attenuator details where different alignments join
- Transition plate degrees of freedom
- Justification for guide pile design and embedment
- Guide pile locations and support consistency
- Utility line flexibility between differentially moving floats
- Path-of-travel tolerances
- Wave fence stress and longevity

Adequacy Review Comments

Coastal Engineering Review Memorandum

Anchor QEA had the following comments on the Coastal Engineering Review Memorandum prepared by Blue Coast Engineering and dated May 18, 2020:

1. This memorandum was provided solely for the assessment of impacts on shoreside properties (i.e., impacts associated with erosion or sedimentation along the coastline). Assessing the impacts of wave action imposing forces on the floating structures or their connections was not part of Blue Coast Engineering's scope of work.
2. The memorandum was not prepared with any knowledge of the Port's enhancements or additions to the breakwater (i.e., recreational boating fingers attached to the backside of the breakwater or floating structures such as the restroom and FLUPSY), as there is no reference to these improvements in the memorandum.
3. Anchor QEA recommends that the Port engage Blue Coast Engineering to review the current plans and provide comments regarding differential movements of wave attenuator components and the various attached accessory floats.

Geotechnical Data

Geotechnical data is required to assess pile embedment into the substrate. Comments about the geotechnical data needed to design the piles are as follows:

1. A geotechnical report was not provided for review that would substantiate the embedment and deflection of the various guide piles used for the attenuator and new access float. It is assumed that such a report has been prepared for this project and was used to determine guide pile design and spacing. If not, a site-specific geotechnical report should be prepared for guide pile embedment recommendations.

60% Breakwater Design Drawings

The following is a listing of comments that can be referenced on the drawings provided in Attachment A:

1. G1 – Drawing Index
    a. Drawings with comments have been highlighted in "yellow" if they are part of the reviewed package.
2. G5 – Site Development Plan
    a. Concerns as outlined in the subsequent sheets include the following:
        i. Fixed connections between changes in alignment of the attenuator
        ii. Interface of fingers to the attenuator
        iii. Location of the floating restroom and FLUPSY
        iv. Guide pile placement

3. C6 – New Access Float
    a. Detail A (Access Float) appears to be represented as a proprietary dock system. If obtaining a sole source contract for these docks is the intent, then no alteration to the detail is necessary; otherwise it is recommended that Detail A be shown more generically.
    b. Based on Detail A, the water system will be submerged. Consider using polyethylene fused piping with stainless-steel risers for longevity and integrity.
    c. The 236-foot-long access float will be rather flexible in the horizontal plane if the grating is not a structural lateral force-resisting element. This may require that the Port adjust their guide pile locations. It is also not recommended that the ends of docks cantilever much beyond the end of the last pontoon to reduce dock stress and increase longevity. Adjusting these pile locations as noted on the drawings is recommended.
4. C7 – Float Plan
    a. Locations are noted where we recommend flexibility in the connections between various floating elements.
5. C8 – Cleat Details
    a. It is not recommended that cleats be provided on the outside face of a wave attenuator, as boats berthed in this location could get damaged and become an insurance liability. A specific wale size is noted in Detail 5. Is this a requirement or minimum size desired by the Port? If not, it should be left up to the design/builder based on the loading criteria.
    b. Finger-to-attenuator connection
        i. It is recommended that the finger-to-attenuator connections be hinged rather than fixed. Because the attenuator will react to incoming wave action much differently than the attached fingers, these connections could become highly stressed. A hinge connection would relieve these stresses and provide a longer finger life if done properly.
        ii. Detail 7: The pile at the end of the attenuator will be much more flexible than the guide piles adjacent to it supported with battered piles. This may cause high stresses at this location of the attenuator. Consider a battered pile arrangement for this one location to match the support of the other attenuator piles.
        iii. Consider shifting the pile supporting the new access float closer to the end of the main walk to reduce the cantilevered portion of the 8-foot access float.
6. C9 – Potable Water and Fire Protection Plan
    a. Provide details for the expansion loops for water and sewage lines in order to determine flexibility in the piping system to take extreme differential movements in the floating elements.
    b. Consider moving the restroom and FLUPSY float to a safer location within the marina due to potential extreme movements of the wave attenuator in relationship to the restroom

and FLUPSY float that could damage both. Attaching it to the attenuator would not normally be advisable.

7. C10 – Floating Restroom and New Concrete Floats
    a. Anchor QEA does not recommend a rigid connection between attenuator components that join at differing dock alignments as they will respond to wave action differently and cause high stresses. These types of rigid connections often fail over time. Anchor QEA suggests the two alignments of attenuator dock be separated by a couple of feet and a transition plate with multiple degrees of freedom introduced. See Drawings S4 and SK1.
    b. Anchor QEA suggests moving the auxiliary floats to a safer location due to potential extreme movements of the wave attenuator in relationship to the restroom and FLUPSY float that could damage both.
    c. Anchor QEA suggests flexible sewage, water piping, and electrical between different dock alignments where mating to accommodate extreme movements of the wave attenuator in relationship to the attached floating structures.
    d. Provide specifications that require the matching of freeboards between the floating restroom and the wave attenuator or other docks where this restroom may be placed to meet Americans with Disabilities Act (ADA) compliance requirements. However, assume they will not match over time and provide transition plates to accommodate potential different freeboards that comply with ADA requirements and mitigate tripping hazards.
8. C11 – Transition Ramp Sections and Details
    a. It is Anchor QEA's opinion that the ramp details noted on this sheet do not provide the necessary degrees of freedom to survive long in an active environment. See Sketch No. 1 (SK-1; Attachment B) for an example of how to solve this issue used in similar situations. It is advisable to also lay a reinforced mat (conveyor-type matting material) over these articulating ramps.
    b. The transition plate and details noted would not survive well in an active environment. Greater degrees of freedom are recommended.
    c. Detail 5: Should this include the location of the ramp plate? Is the horizontal line noted in the drawing a utility support? The utility support trapeze should be shown in Detail 3 as well. Verify the adequacy of a 5-foot-long Unistrut to support the utility line supported from the moving ramp.
9. S1 – Pile Plan
    a. Some shifting of guide piles is recommended to reduce stress on the floating pontoons.
    b. An additional battered pile arrangement is recommended at the knuckle of the wave attenuator.
    c. We recommend a battered pile arrangement at the far east end of the wave attenuator.
10. S2 – Structural Notes

   a. Pile driving: It is generally recommended to state the hammer size and range of energy required to install piles. Otherwise, the bidders have no way to base their selection of equipment for bid purposes.
   b. Tolerance of walking structures: It is recommended to state how much twist or slope in the transverse and longitudinal direction of a given float or float assembly is acceptable under normal operating conditions.
   c. Does Note J2 also relate to the interface of miscellaneous floating structures adjacent to the wave attenuator? If so, this implies a fixed connection between these floating structures, which is not recommended. Assess all of the various movements between these structures and determine if the connections can withstand these movements.
11. S3 – Wave Fence Details
   a. Consider a thru bolt for the bottom connection between the wave fences to prevent excessive deflection and stress on the upper connection under extreme wave conditions. The use of lag bolts is not recommended and may be problematic over time.
   b. Align the guide roller assembly with the pontoon thru bolts. Consider bracing the outer extremity of the guide frame to the pontoon due to the weight distribution.
   c. Confirm that the wave fence material is compatible with the submerged environment and potential for degradation.
12. S4 – Attenuator Details
   a. Anchor QEA does not recommend a fixed connection between different attenuator alignments such as this due to the high stresses that will occur at this connection and the potential for failure over time. Consider the suggested detail or something similar. See SK-1 for a similar installation (Attachment B).
   b. Anchor QEA also recommends an additional pile system (vertical and battered) at this location to prevent the overstress of the wave attenuator when resisting incoming wave action.
13. S5 – Attenuator Details
   a. Same comment as S3 – Wave Fence Details.
14. S6 – Guide Roller Detail
   a. Drawings do not indicate how the two layers of ultra-high molecular weight (UHMW) material attach. Consider a one-piece UHMW or polyethylene rub block in lieu of a two-piece composite for ease of construction and longevity, or the sketch provided with bolts countersunk.
   b. It is suggested to vertically brace this guide roller to the concrete float, as the assembly will be heavy and will begin to sag over time if not additionally supported.
15. S7 – Guide Piles
   a. Is it planned to provide fendering material between the steel piles and berthed boats?

b. Is the concrete fill within the steel piles needed for structural stiffness? If so, then it is fine. If not, it will not provide much, if any, corrosion protection value and probably should be removed.

Port of Poulsbo Recommendations and Requests for Additional Information

A number of comments were provided as suggestions to the Port as it progresses into later stages of design. However, in order to confirm the adequacy of the Port's designs and supporting documentation, the following information is required in response to the questions and comments listed previously:

- Blue Coast Engineering review of the current plans and provision of comments regarding differential movements of wave attenuator components and the various attached accessory floats
- Structural calculations justifying the design of the guide piles and embedment into the basin floor
- Geotechnical report with recommendations for the various guide piles
- Justification analysis of the attachment details of fingers attached to the back side of the wave attenuator
- Confirmation that the floating restroom and FLUPSY can withstand the wave attenuator movements and forces and can maintain safe access per ADA requirements
- Analysis of all dock changes in alignment and the consideration of free-floating versus the noted fixed rigid connections
- Reassessment of the various transition plates to assure they can handle all of the degrees of freedom without sustaining damage

Attachment A
60% Breakwater Design Drawings (15) with Comments

PORT OF POULSBO
POULSBO, WASHINGTON
BREAKWATER REPLACEMENT

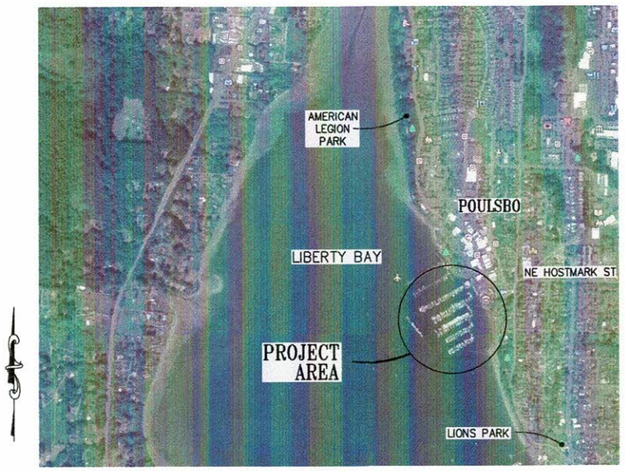

NW 1/4, SEC. 23, TWP 26N, RGE. 1E, W.M.

VICINITY MAP

NTS

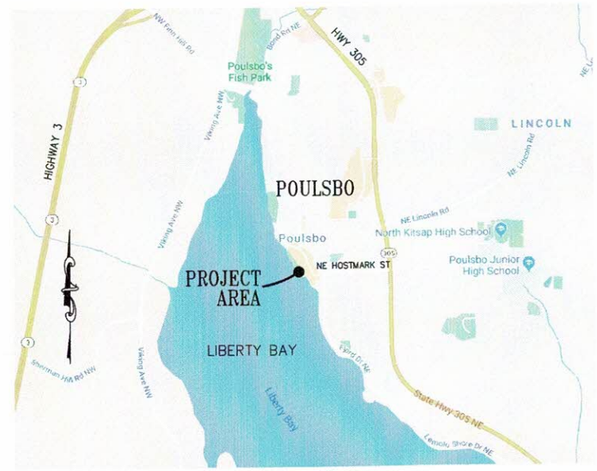

NW 1/4, SEC. 23, TWP 26N, RGE. 1E, W.M.

LOCATION MAP

NTS

DRAWING INDEX

LEGEND

Drawings made part of this review

ABBREVIATIONS:

AC	ASPHALT CONCRETE
AP	ANGLE POINT
APPROX	APPROXIMATE
ASPH	ASPHALT
AVE	AVENUE
BLDG	BUILDING
BM	BENCH MARK
BOW	BOTTOM OF WALL
CB	CATCH BASIN
CL	CLASS
CL OR ℄	CENTERLINE
CONC	CONCRETE
CSBC	CRUSHED SURFACING, BASE COURSE
CSTC	CRUSHED SURFACING, TOP COURSE
DIA	DIAMETER
DWG	DRAWING
E	EAST
EASE	EASEMENT
EL	ELEVATION
EOP	EDGE OF PAVEMENT
EVCE	END VERTICAL CURVE ELEVATION
EVCS	END VERTICAL CURVE STATION
(E)	EXISTING
FH	FIRE HYDRANT
FO	FIBER OPTIC
FT	FEET, FOOT
G	GAS
GALV	GALVANIZED
GV	GATE VALVE
HORIZ	HORIZONTAL
HMA	HOT MIX ASPHALT
ID	INSIDE DIAMETER
IE	INVERT ELEVATION
IN	INCH
JT	JOINT
MAX	MAXIMUM
(N)	(N)
MH	MANHOLE
MHHW	MEAN HIGHER HIGH WATER
MIN	MINIMUM
MLLW	MEAN LOWER LOW WATER
N	NORTH/NORTHING
OD	OUTSIDE DIAMETER
OHW	ORDINARY HIGH WATER
P	POWER
PAVE	PAVEMENT
PC	POINT OF CURVATURE (BEGIN OF CURVE)
PI	POINT OF INTERSECTION
PMA	PORT MANAGEMENT AREA
POP	PORT OF POULSBO
POC	POINT ON CURVE
PT	POINT OF TANGENCY (END OF CURVE)
PVC	POINT OF VERTICAL CURVE
PVI	POINT OF VERTICAL INTERSECTION
PVT	POINT OF VERTICAL TANGENCY
R	RADIUS
R/W	RIGHT OF WAY
S	SOUTH
SCH	SCHEDULE
SD	STORM DRAIN
SDMH	STORM DRAIN MANHOLE
SHT	SHEET
SIM	SIMILAR
SS	SANITARY SEWER
SSMH	SANITARY SEWER MANHOLE
STD	STANDARD
T	TELEPHONE
TOW	TOP OF WALL
TYP	TYPICAL
UNO	UNLESS NOTED OTHERWISE
VERT	VERTICAL
W	WATER
W/	WITH
NW	NORTHWEST
TWP	TOWNSHIP
RGE	RANGE
SEC	SECTION
STA	STATION
&	AND
DEMO	DEMOLITION
PIP	PROTECT IN PLACE

SECTION, DETAIL, NOTE & PLAN DESIGNATIONS:

DETAIL CALLOUT:

1 / 10 — DETAIL NUMBER; SHEET NUMBER ON WHICH DETAIL APPEARS

SECTION CUT:

A / 15 — SECTION LETTER; SHEET NUMBER ON WHICH SECTION APPEARS

SECTION AND DETAIL DESIGNATION:

DETAIL OR SECTION X / X — SCALE; NUMBER OR LETTER; SHEET NUMBER(S) ON WHICH DETAIL CALLOUT APPEARS

PLAN

SCALE IN FEET

0 20 40

NOTE CALLOUT:

3 KEY NOTE NUMBER

2 CONSTRUCTION NOTE

2 DEMOLITION NOTE

2 PHOTO NUMBER & DIRECTION TAKEN

60% BREAKWATER DESIGN DRAWINGS

SOUNDWEST
ENGINEERING ASSOCIATES
8745 Pacific Avenue NW
Suite 201
Silverdale, WA 98383
360.337.0029
jpiccone@soundwesteng.com

CONSOR

HARBOR POWER

PORT OF POULSBO

JOHN MARSHALL PICCONE — STATE OF WASHINGTON — 50663 — REGISTERED PROFESSIONAL ENGINEER

DRAWN BY	DJB
CHECKED BY	J. PICCONE

REVISIONS		
△1	DJB	10-28-20

PORT OF POULSBO
BREAKWATER REPLACEMENT

COVER, VICINITY / LOCATION MAPS & DRAWING INDEX

DATE
MAY 20, 2020

SHEET
G1

Reviewed: R.H. Mason, PE C030661CA

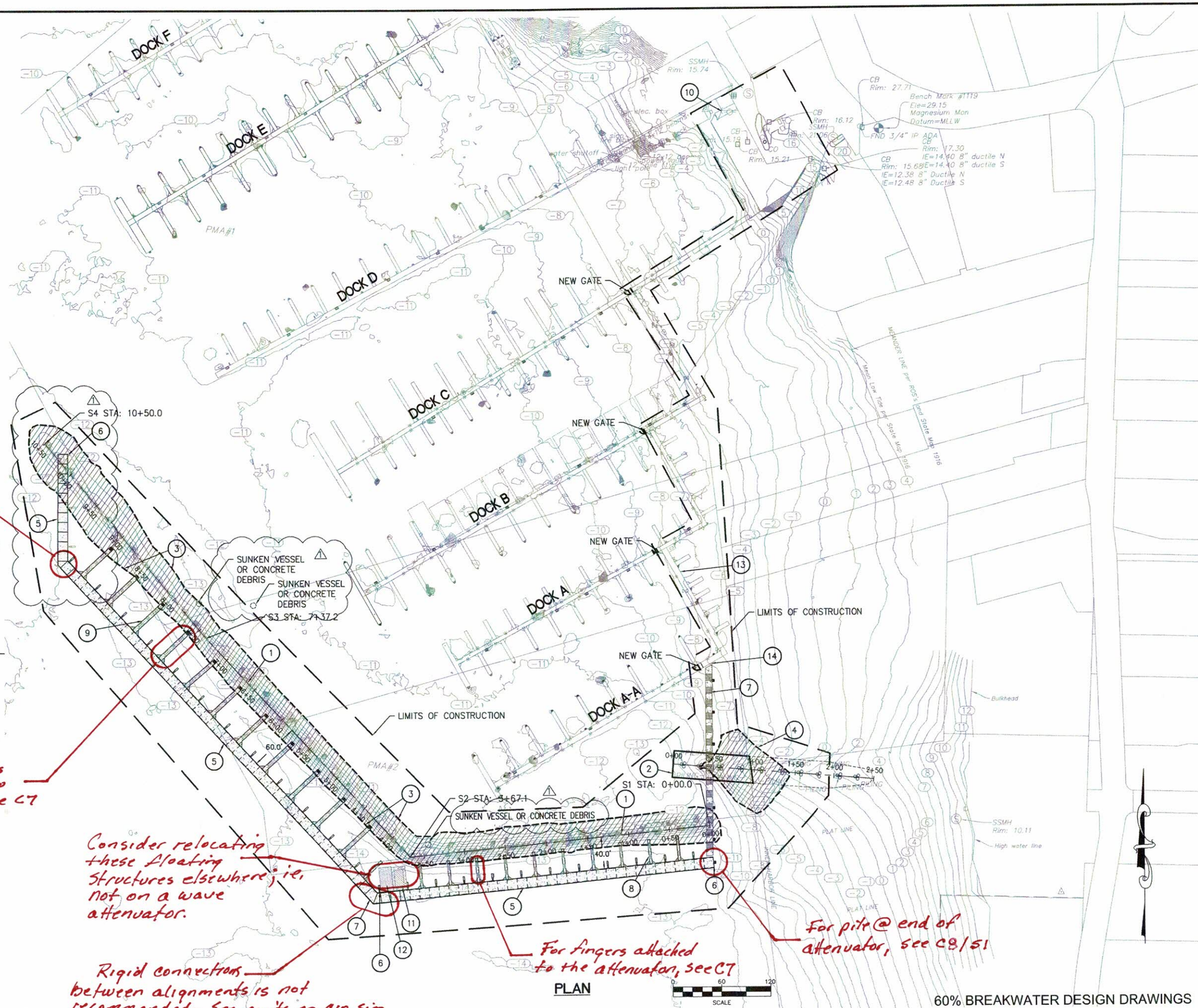

Rigid connections between attenuator alignments is not recommended - See Com'ts on C10, sim.

For fingers attached to attenuator, see C7

Consider relocating these floating structures elsewhere; ie, not on a wave attenuator.

Rigid connections between alignments is not recommended - See com'ts on C10, Sim

For fingers attached to the attenuator, see C7

For pile @ end of attenuator, see C8/S1

LEGEND

▨	INDICATES APPROXIMATE EXCAVATION LIMITS TO ELEVATION −12.0± PLUS 1-FOOT OVEREXCAVATION ALLOWANCE
— — —	CONSTRUCTION LIMITS
◌	SUNKEN VESSEL OR CONCRETE DEBRIS

KEY NOTES:

1. DEMOLISH EXISTING BREAKWATER
2. DEMOLISH LOG BOOM & PILE CLUSTERS
3. REMOVE RUBBLE, SEDIMENT & DEBRIS TO −12 MLLW
4. EXCAVATE TO −8 MLLW & GRADE SLOPE TO DAYLIGHT
5. NEW BREAKWATER
6. AIDS TO NAVIGATION, SALVAGE
7. NEW ACCESS FLOAT
8. 30' FINGER FLOATS
9. 50' FINGER FLOATS
10. POSSIBLE ELECTRICAL CONNECTONS
11. 17'X29' FLOAT W/ RESTROOM BUILDING
12. 15'X30' FLUPSY (BY OTHERS)
13. NEW ELECTRICAL LINES TO BREAKWATER
14. POTABLE & FIRE WATER CONNECTIONS

⚠

SOUNDWEST
ENGINEERING ASSOCIATES
8745 Pacific Avenue NW
Suite 201
Silverdale, WA 98383
360.337.0029
jpiccone@soundwesteng.com

CONSOR

HARBOR POWER

PORT OF POULSBO

JOHN MARSHALL PICCONE
50863

DRAWN BY	DJB
CHECKED BY	J. PICCONE

REVISIONS		
⚠	DJB	10-28-20

PORT OF POULSBO
BREAKWATER REPLACEMENT

PROPOSED SITE DEVELOPMENT - PLAN

60% BREAKWATER DESIGN DRAWINGS

DATE
MAY 20, 2020

SHEET
G5

NOTES:

1. PIP ALL PIPING, TIMBER WALERS, RUB BOARDS & UTILITIES.
2. THIS CONSTRUCTION PLAN IS INTENDED FOR OVERVIEW OF CONSTRUCTION SCOPE. SEE ELECTRICAL PLANS FOR CONSTRUCTION OF ELECTRICAL ITEMS.
3. PROVIDE SAFE SHORE ACCESS TO DOCKS FOR MARINA TENANTS AND PORT PERSONNEL AT ALL TIMES. OBTAIN PRIOR APPROVAL OF TEMPORARY ACCESS PLAN FROM PORT.
4. SEE STRUCTURAL SHEETS FOR ADDITIONAL PILING REQUIREMENTS.
5. TRANSITION RAMPS NOT SHOWN FOR CLARITY – 2 LOCATIONS, THIS SHEET.
6. SEE ELECTRICAL DRAWING FOR LIGHTING DETAILS.
7. UTILITY BRACKETS FOR POTABLE & FIRE WATER, SEE SECTION A.
8. MAIN ACCESS FLOATS SHALL HAVE MINIMUM 50% GRATED DECK AND COMPLY W/ WAC 220-660-380.

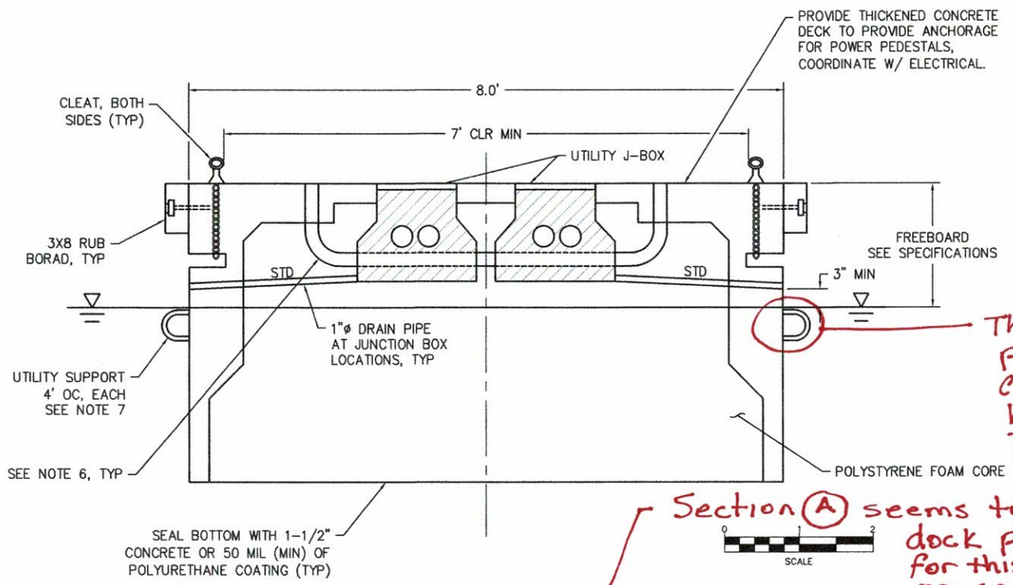

ACCESS FLOAT (A)

These brackets imply the water piping will always be submerged. Consider piping to be polyethylene pipe but discuss with Local Fire Authority. Transitions to above-water cabinets to be stainless steel. (Recommended)

Section (A) seems to depict a proprietary dock product. Is it the intent for this to be a sole source procurement, or competitive?

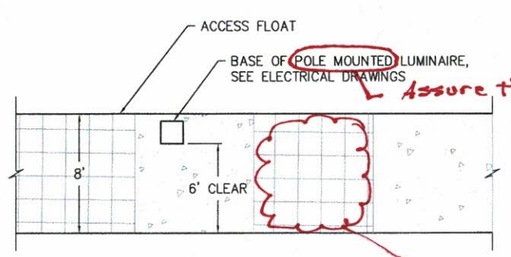

LUMINAIRE BASE CLEARENCE TYPICAL (B)

NTS

Assure that the base connection for these poles are rigid connections, ie, not done w/ expansion bolts.

Does this grating transmit horizontal load or just support live load? Connection detail?

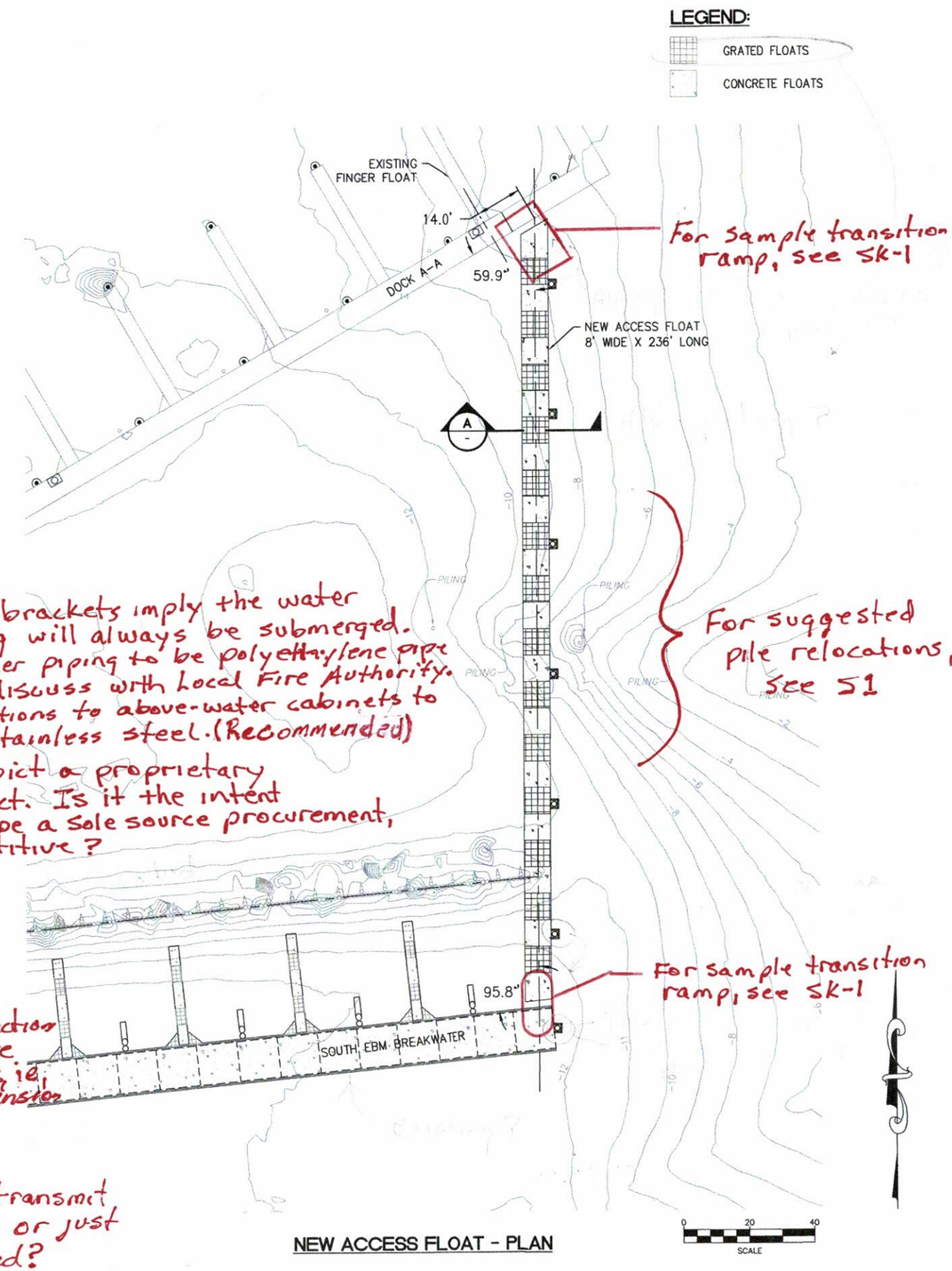

For sample transition ramp, see SK-1

For suggested pile relocations, see S1

For sample transition ramp, see SK-1

NEW ACCESS FLOAT - PLAN

60% BREAKWATER DESIGN DRAWINGS

SOUNDWEST ENGINEERING ASSOCIATES
8745 Pacific Avenue NW
Suite 201
Silverdale, WA 98383
360.337.0029
jpiccone@soundwesteng.com

CONSOR

HARBOR POWER

PORT OF POULSBO

JOHN MARSHALL PICCONE, STATE OF WASHINGTON, 50863, REGISTERED PROFESSIONAL ENGINEER

DRAWN BY	DJB
CHECKED BY	J. PICCONE

REVISIONS

PORT OF POULSBO BREAKWATER REPLACEMENT

NEW ACCESS FLOAT

DATE MAY 20, 2020

SHEET C6

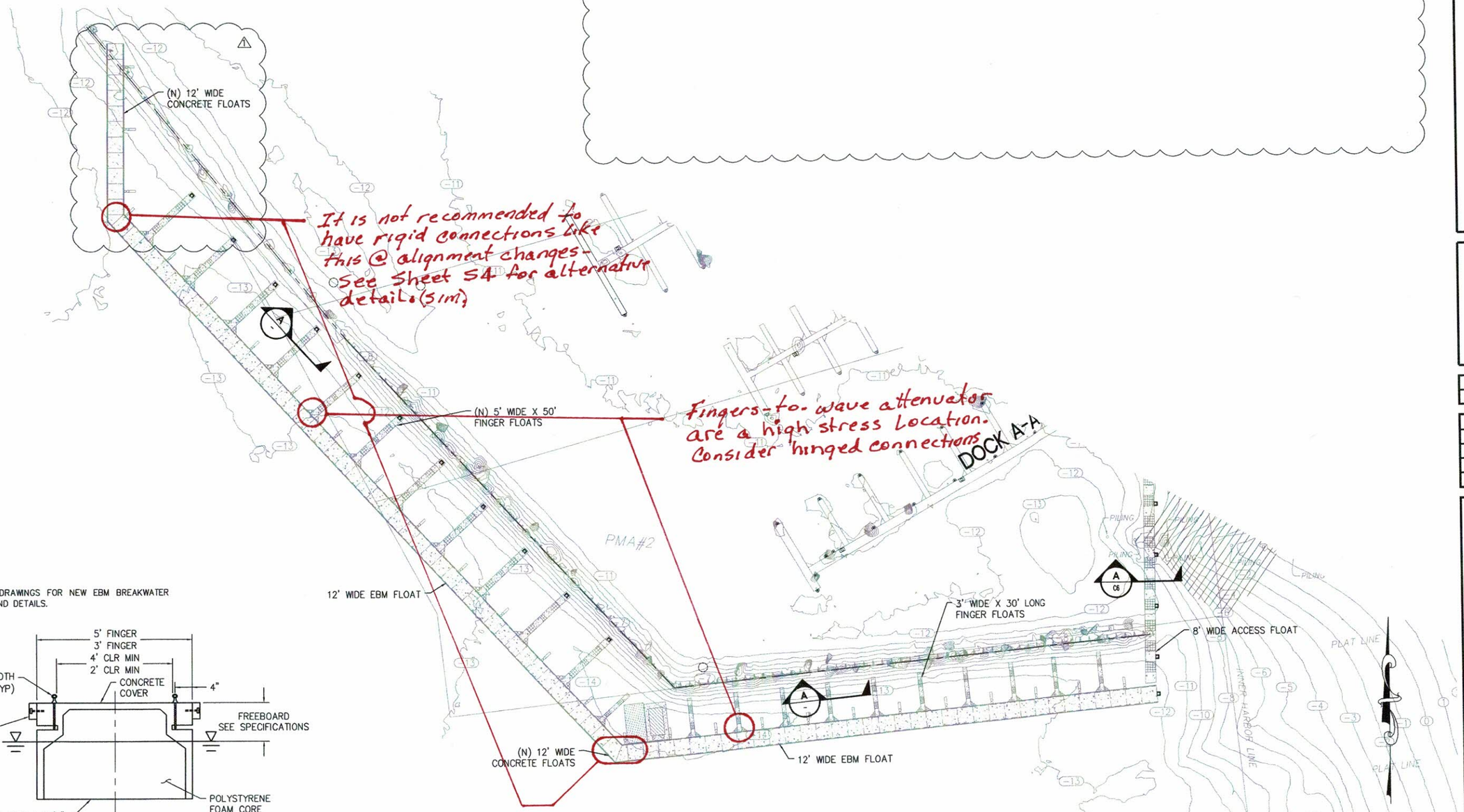

NOTES:

1. SEE STRUCTURAL DRAWINGS FOR NEW EBM BREAKWATER FLOAT SECTIONS AND DETAILS.

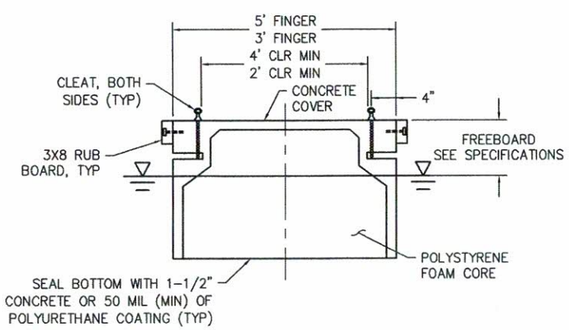

FINGER FLOAT TYPICAL (A)

0 1 2 SCALE

FLOAT - PLAN

0 40 80 SCALE

60% BREAKWATER DESIGN DRAWINGS

SOUNDWEST
ENGINEERING ASSOCIATES
8745 Pacific Avenue NW
Suite 201
Silverdale, WA 98383
360.337.0029
jpiccone@soundwesteng.com

CONSOR

HARBOR POWER

PORT OF POULSBO

JOHN MARSHALL PICCONE
STATE OF WASHINGTON
50863
REGISTERED PROFESSIONAL ENGINEER

DRAWN BY	DJB
CHECKED BY	J. PICCONE

REVISIONS		
1	DJB	10-28-20

PORT OF POULSBO BREAKWATER REPLACEMENT

FLOAT - PLAN

DATE
MAY 20, 2020

SHEET
C7

CLEAT SIZE RPF TABLE		
STRUCTURAL	SIDE	SIZE
BW	LIBERTY BAY	15"
SBW	MARINA	10"
WBW	MARINA	15"
ACCESS FLOAT	MARINA	10"

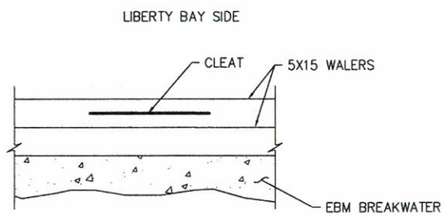

BREAKWATER CLEAT LOCATION DETAIL 1 –

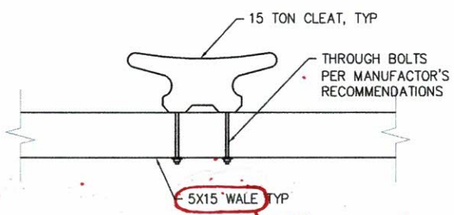

Prescriptive or Performancy specification?

TYPICAL CLEAT DETAIL 5 –
NTS

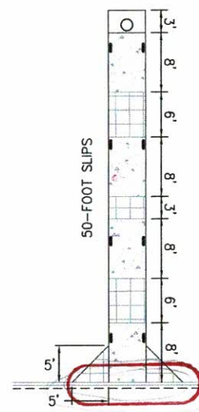

50' FINGER FLOAT GRATING TYPICAL 2 –
NTS

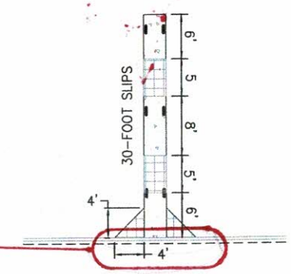

30' FINGER FLOAT GRATING TYPICAL 3 –
NTS

See C7

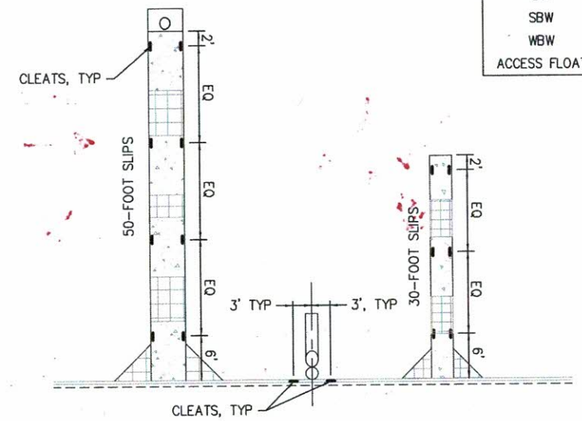

CLEAT LAYOUT FOR SLIPS TYPICAL 4 –
NTS

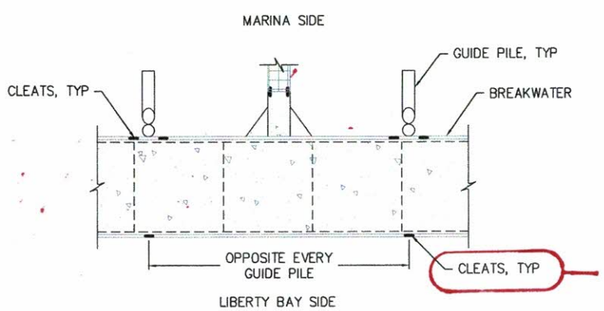

Allowing boats to tie up on active side on Attenuator ??

BREAKWATER CLEAT LAYOUT TYPICAL 6 –
NTS

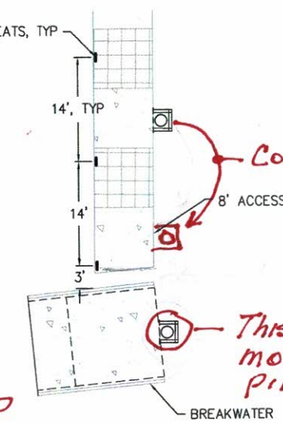

Consider moving pile to end of dock to reduce cantilevered dock walkways.

This pile will deflect much more than the battered piles supporting the attenuator. Verify that it is providing the necessary restraint. See suggestion on S-1.

ACESS FLOAT TYPICAL 7 –
NTS

NOTE:
1. FINGER FLOATS SHALL HAVE MIN 30% GRATED DECKING & COMPLY WITH WAC 220-660-380.

60% BREAKWATER DESIGN DRAWINGS

SOUNDWEST ENGINEERING ASSOCIATES
8745 Pacific Avenue NW
Suite 201
Silverdale, WA 98383
360.337.0029
jpiccone@soundwesteng.com

CONSOR

HARBOR POWER

PORT OF POULSBO

JOHN MARSHALL PICCONE
STATE OF WASHINGTON
50863
REGISTERED PROFESSIONAL ENGINEER

DRAWN BY	DJB
CHECKED BY	J. PICCONE

REVISIONS

PORT OF POULSBO
BREAKWATER REPLACEMENT

CLEAT DETAILS

DATE
MAY 20, 2020

SHEET
C8

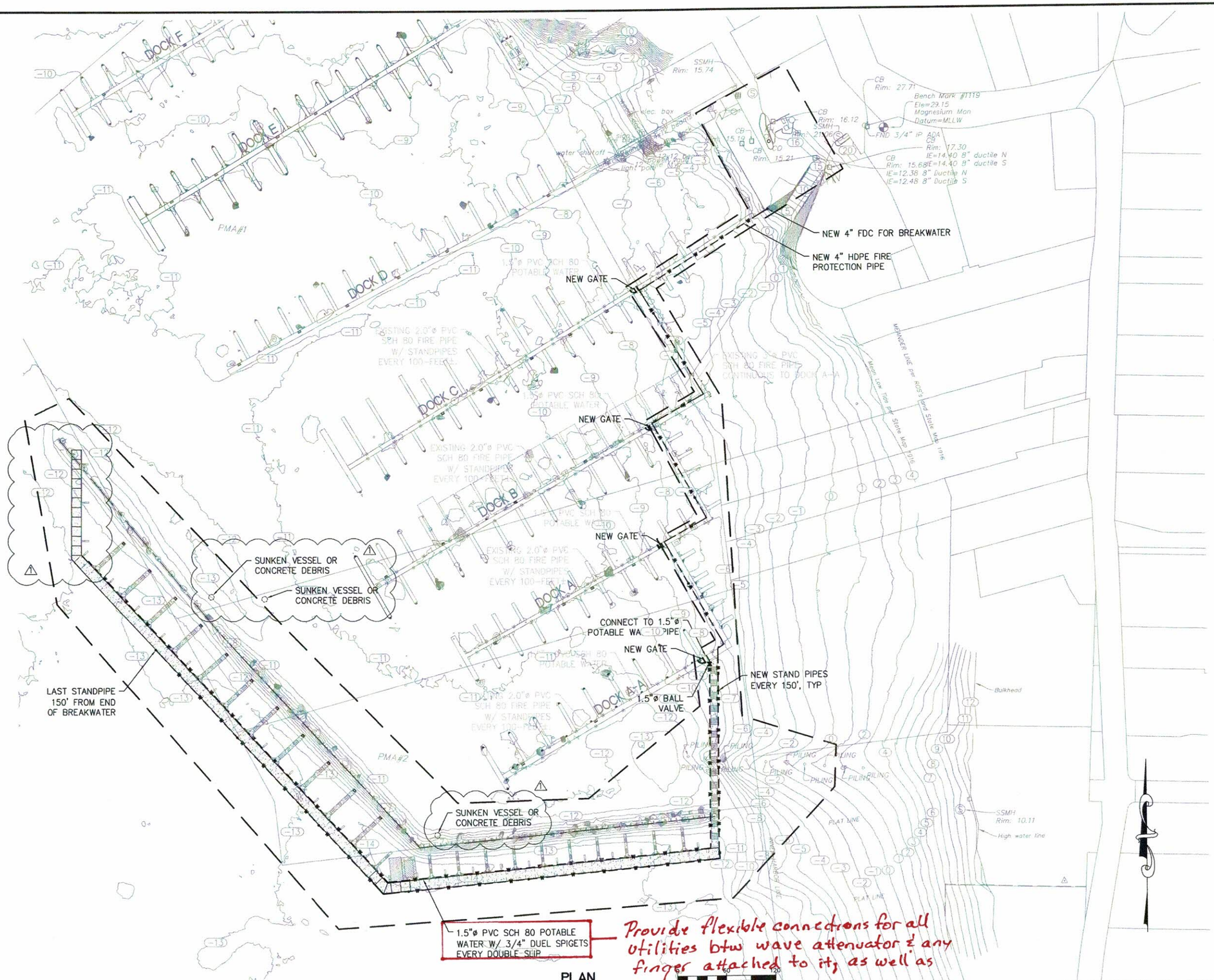

PLAN

60% BREAKWATER DESIGN DRAWINGS

SOUNDWEST
ENGINEERING ASSOCIATES
8745 Pacific Avenue NW
Suite 201
Silverdale, WA 98383
360.337.0029
jpiccone@soundwesteng.com

CONSOR

HARBOR POWER

PORT OF POULSBO

JOHN MARSHALL PICCONE
STATE OF WASHINGTON
50863
REGISTERED PROFESSIONAL ENGINEER

DRAWN BY	DJB
CHECKED BY	J. PICCONE

REVISIONS		
1	DJB	10-28-20

PORT OF POULSBO
BREAKWATER REPLACEMENT

POTABLE WATER & FIRE PROTECTION - PLAN

DATE
MAY 20, 2020

SHEET
C9

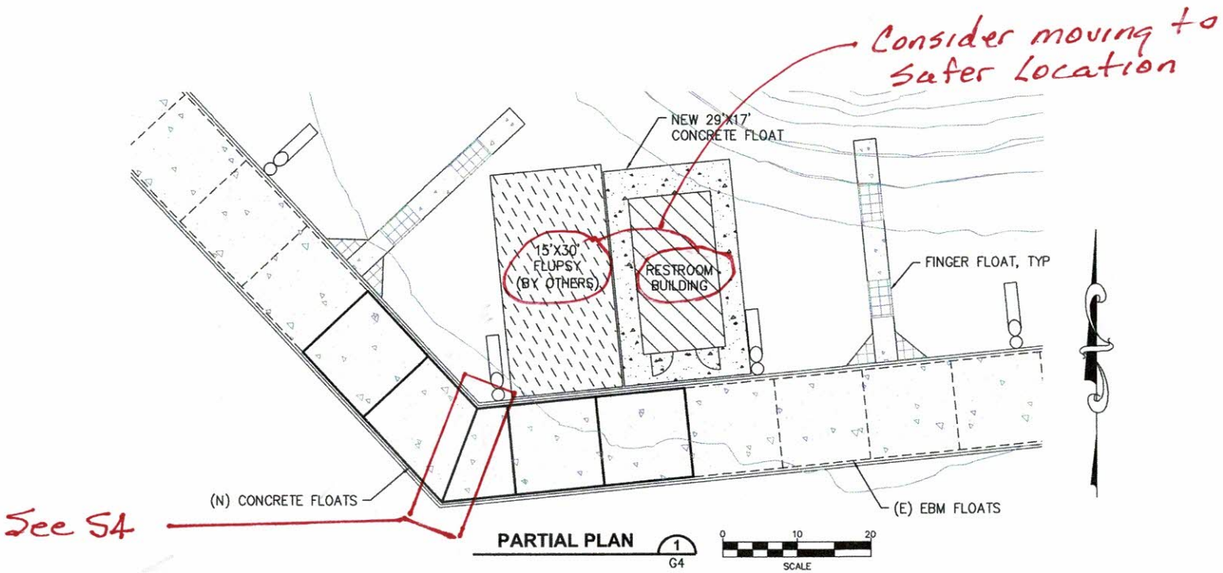

PARTIAL PLAN 1 G4

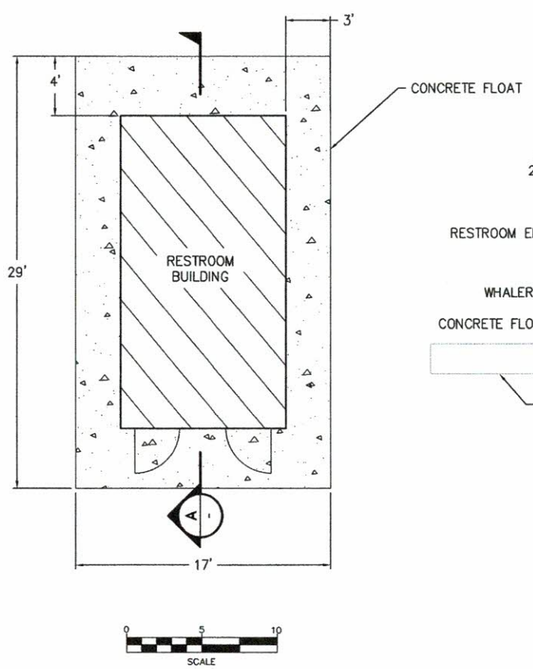

RESTROOM PLAN 2

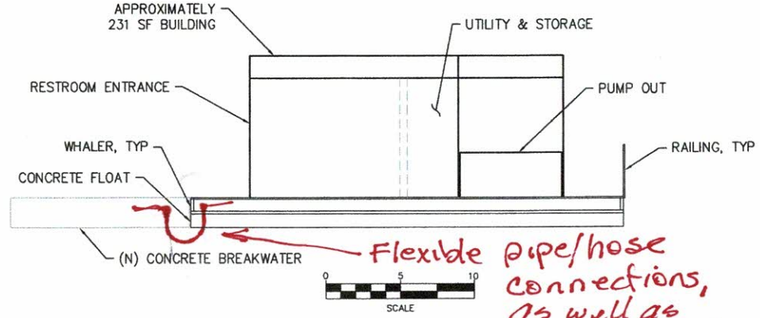

SECTION A

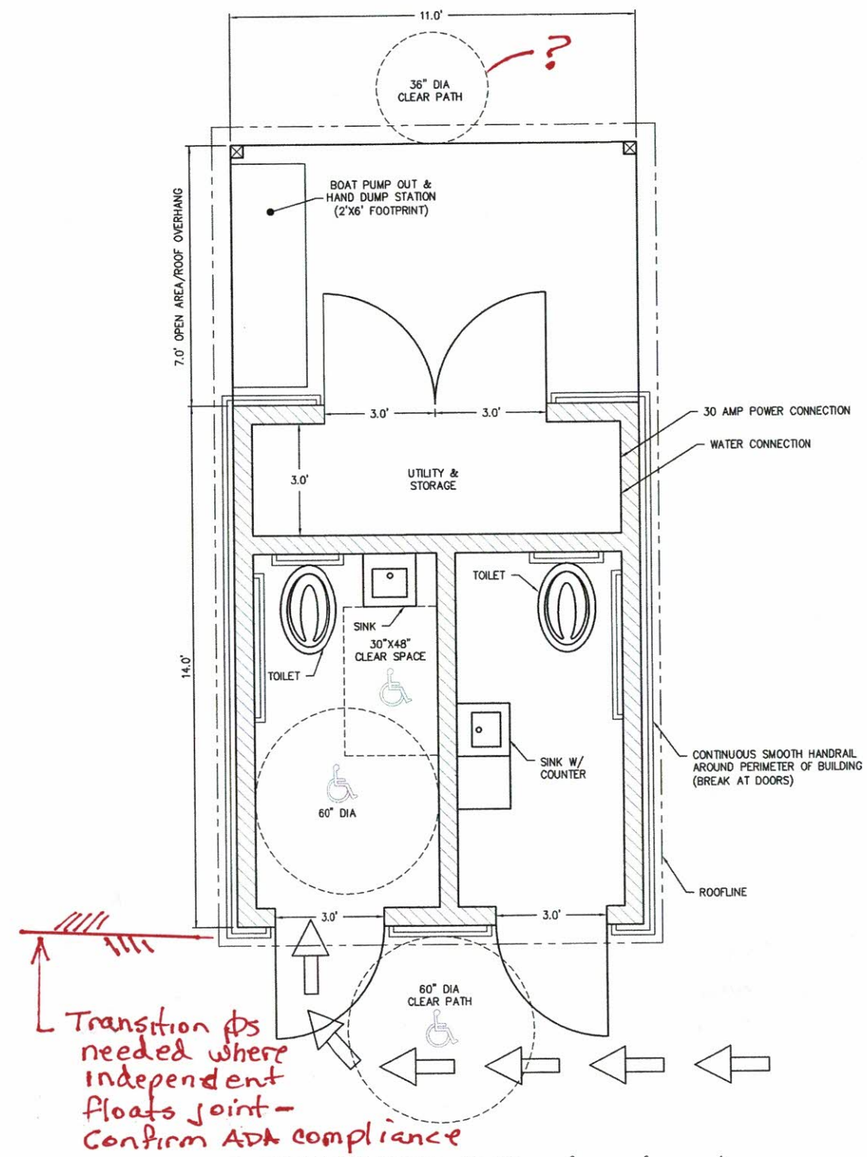

RESTROOM BUILDING - PLAN

SOUNDWEST
ENGINEERING ASSOCIATES
8745 Pacific Avenue NW
Suite 201
Silverdale, WA 98383
360.337.0029
jpiccone@soundwesteng.com

CONSOR

HARBOR POWER

PORT OF POULSBO

JOHN MARSHALL PICCONE
STATE OF WASHINGTON
50863
REGISTERED PROFESSIONAL ENGINEER

DRAWN BY	DJB
CHECKED BY	J. PICCONE

REVISIONS

PORT OF POULSBO
BREAKWATER REPLACEMENT

FLOATING RESTROOM PLAN & DETAIL

DATE
MAY 20, 2020

SHEET
C10

60% BREAKWATER DESIGN DRAWINGS

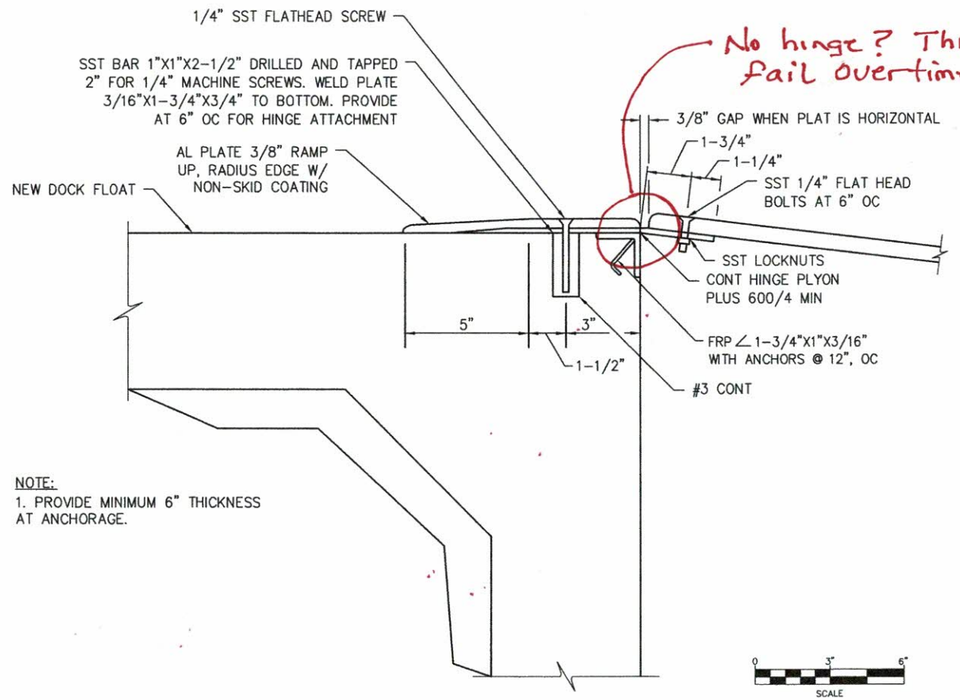

No hinge? This will probably fail overtime.

NOTE:
1. PROVIDE MINIMUM 6" THICKNESS AT ANCHORAGE.

TRANSITION RAMP HINGE DETAIL (1)

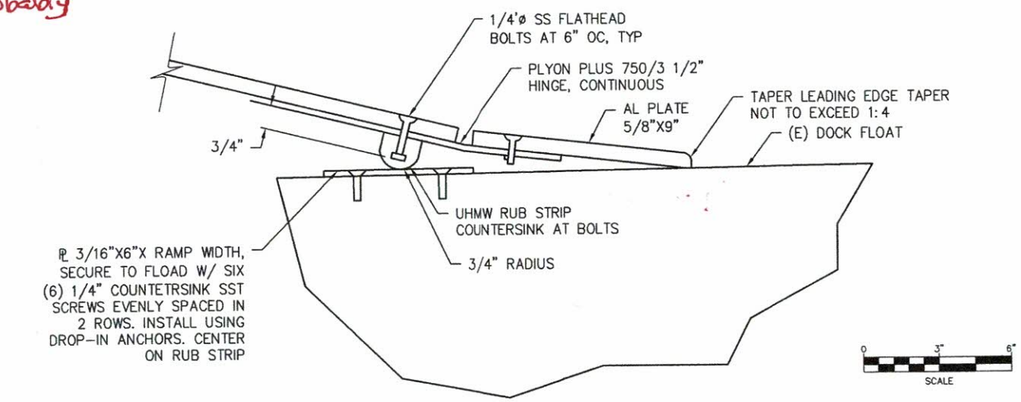

TRANSITION RAMP DETAIL (2)

When the wave attenuator rotates, this sliding end will lift-off the float & will probably deform the plate or damage the (1) side. More degrees-of-freedom required.

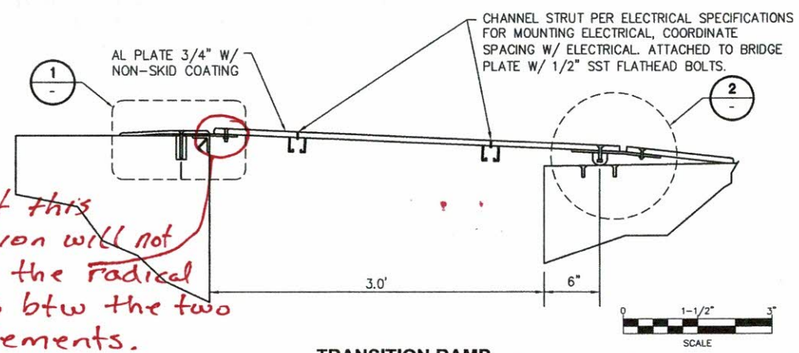

It is felt this connection will not survive the radical motions btw the two dock elements.

TRANSITION RAMP ELEVATION (3/X)

See SK-1 for an example of a transition plate with expanded degrees of freedom allowing for large dock movements.

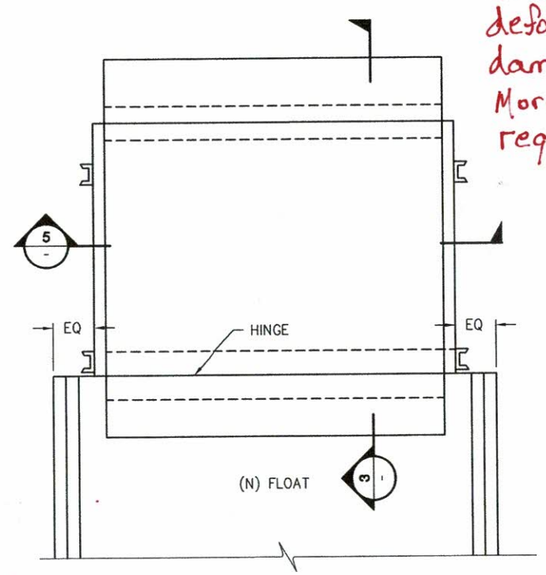

TYPICAL TRANSITION RAMP PLAN (4)
NTS

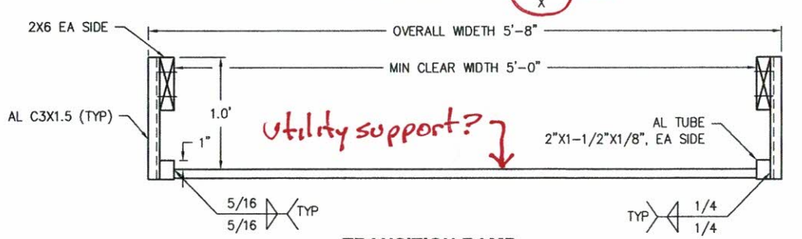

Utility support?

TRANSITION RAMP SECTION (5)

Where is the ramp plate in this detail?

Note: It may be wise to have different types of transition plates for the various locations due to geometry & differing predicted movements

60% BREAKWATER DESIGN DRAWINGS

SOUNDWEST
ENGINEERING ASSOCIATES
8745 Pacific Avenue NW
Suite 201
Silverdale, WA 98383
360.337.0029
jpiccone@soundwesteng.com

CONSOR

HARBOR POWER

PORT OF POULSBO

JOHN MARSHALL PICCONE
STATE OF WASHINGTON
50863
REGISTERED PROFESSIONAL ENGINEER

DRAWN BY	DJB
CHECKED BY	J. PICCONE

REVISIONS

PORT OF POULSBO
BREAKWATER REPLACEMENT

TRANSITION RAMP SECTIONS & DETAILS

DATE
MAY 20, 2020

SHEET
C11

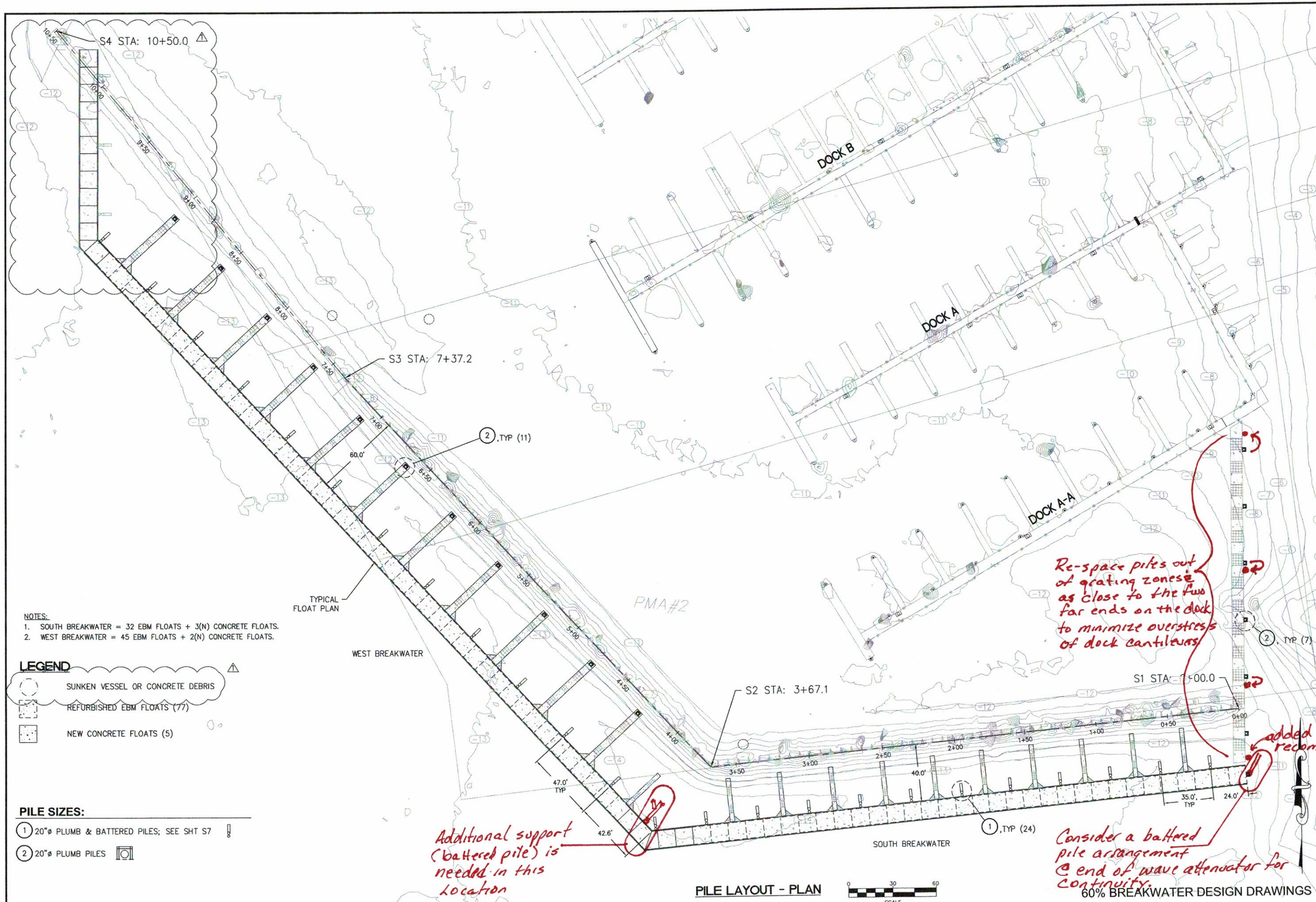

NOTES:
1. SOUTH BREAKWATER = 32 EBM FLOATS + 3(N) CONCRETE FLOATS.
2. WEST BREAKWATER = 45 EBM FLOATS + 2(N) CONCRETE FLOATS.

LEGEND

- SUNKEN VESSEL OR CONCRETE DEBRIS
- REFURBISHED EBM FLOATS (77)
- NEW CONCRETE FLOATS (5)

PILE SIZES:

1. 20"ø PLUMB & BATTERED PILES; SEE SHT S7
2. 20"ø PLUMB PILES

PILE LAYOUT - PLAN

SCALE 0 30 60

60% BREAKWATER DESIGN DRAWINGS

SOUNDWEST
ENGINEERING ASSOCIATES
8745 Pacific Avenue NW
Suite 201
Silverdale, WA 98383
360.337.0029
jpiccone@soundwesteng.com

CONSOR

HARBOR PILEWORK

PORT OF POULSBO

JOHN MARSHALL PICCONE
STATE OF WASHINGTON
50863
REGISTERED PROFESSIONAL ENGINEER

DRAWN BY	DJB
CHECKED BY	J. PICCONE

REVISIONS		
1	DJB	10-28-20

PORT OF POULSBO
BREAKWATER REPLACEMENT

PILE LAYOUT - PLAN

DATE
MAY 20, 2020

SHEET
S1

A. DESIGN CRITERIA

1. STRUCTURAL WORK SHALL CONFORM TO THE REQUIREMENTS OF THE POULSBO MUNICIPAL CODE AND WASHINGTON STATE BUILDING CODE. WORK SHALL COMPLY WITH FEDERAL, STATE, AND LOCAL PERMIT CONDITIONS.
2. THE COMPLETED STRUCTURE HAS BEEN DESIGNED TO WITHSTAND THE FOLLOWING DESIGN LIVE LOADS APPLIED IN CONJUNCTION WITH DESIGN DREDGE/MUDLINE ELEVATIONS INDICATED ON THE CONTRACT DRAWINGS:

a. LIVE LOADS:
FLOATING BREAKWATER: 40 PSF UNIFORM LOAD AND 400 LB CONCENTRATED LOAD
FLOATING FINGER DOCKS: 40 PSF UNIFORM LOAD

b. WIND LOADS: PER ASCE 7 – 16 HAZARD TOOL
50-YEAR MRI: 78 MPH
BUILDING EXPOSURE: D
BUILDING CATEGORY: I
BUILDING IMPORTANCE FACTOR, I: 1.0

c. DESIGN VESSELS:
c.1 75-FT DESIGN VESSEL:
LOA: 82 FT
BEAM: 20 FT
DRAFT: 6 FT
DISPLACEMENT: 63 TONS
APPROACH VELOCITY: 2.0 FT / SEC

c.2 50-FT DESIGN VESSEL:
LOA: 55 FT
BEAM: 27 FT
DRAFT: 5 FT
DISPLACEMENT: 32 TONS
APPROACH VELOCITY: 2.0 FT / SEC

c.3 30-FT DESIGN VESSEL:
LOA: 33 FT
BEAM: 11 FT
DRAFT: 3 FT
DISPLACEMENT: 7 TONS
APPROACH VELOCITY: 2.0 FT / SEC

d. DESIGN ENVIRONMENTAL CONDITIONS:
SIGNIFICANT WAVE HEIGHT: 2.2 FT
PEAK PERIOD: 2.5 SEC
CURRENT VELOCITY: 3.0 FT / SEC

e. DESIGN EXCAVATION DEPTH: -16 FT MLLW

3. TIDAL DATUM INFORMATION REFERENCES NOAA'S TIDE STATION 9445719 POULSBO, WA. TIDAL DATA IS PER NOAA AVERAGES BASED ON THE 1983–2001 TIDAL EPOCH AND IS NOT GUARUNTEED TO REPRESENT CONDITIONS WHICH MAY OCCUR DURING CONSTRUCTION. ACTUAL WATER LEVELS WILL VARY FROM LEVEL INDICATED. THE CONTRACTOR IS RESPONSIBLE FOR MAKING HIS OWN ESTIMATES OF WATER LEVELS WHICH MAY OCCUR DURING CONSTRUCTION. ELEVATIONS REFERENCE MEAN LOWER LOW WATER, UNLESS OTHERWISE NOTED.

B. STEEL PILES

1. STEEL PIPE PILES SHALL CONFORM TO ASTM A252 GRADE 3 (MOD), WITH FY = 50 KSI. PILES SHALL BE LONGITUDINALLY WELDED WITH SEAMS SPECIFIED AS COMPLETE PENETRATION WELDS.
2. STEEL PIPE PILES SHALL BE DRIVEN TO THE MINIMUM TIP ELEVATION, CAPACITY, OR BOTH, AS INDICATED ON THE CONTRACT DOCUMENTS.
3. DO NOT FIELD SPLICE PILE IN LOWER 40 FEET. BOTH, UPPER AND LOWER SECTIONS OF PILE ENDS, SHALL BE SMOOTH, SQUARE AND FLAT PRIOR TO SPLICING.
4. ALL WELDING REQUIRED FOR THE STEEL PIPE PILES SHALL BE FULL PENETRATION WELDS CONFORMING TO AWS D1.1 WELDING CODE AND SHALL BE CAPABLE OF DEVELOPING THE PILE CROSS-SECTION IN TENSION AND BENDING.
5. THE TIPS OF PIPE PILES SHALL BE FITTED WITH AN OPEN END CUTTING SHOE, SUCH AS 0-14001 AS MANUFACTURED BY ASSOCIATED PILE & FITTING CORP OR EQUIVALENT ACCEPTED BY THE ENGINEER OF RECORD. INSTALL POINTS TIGHT TO TIP AND SEAL WELD ALL AROUND AS RECOMMENDED BY MANUFACTURER.
6. STEEL PIPE PILES SHALL BE SHOP COATED, ON OUTER SURFACES ONLY, TO A MINIMUM OF TEN (10) FEET BELOW THE DESIGN EXCAVATION MUDLINE DEPTH ELEVATION OR AS INDICATED ON THE DRAWINGS.

C. PILE DRIVING

1. DRIVE PILES WITH A VIBRATORY AND AN AIR OR DIESEL OPERATED HAMMER WITH SUFFICIENT ENERGY AND ENERGY TRANSFER CHARACTERISTICS TO DRIVE THE PILES TO THE REQUIRED CAPACITY AND TOE ELEVATIONS WITHOUT DAMAGING THE PILE HEAD. USE CAUTION NOT TO INJURE THE PILES BY OVER DRIVING AS WOULD BE INDICATED BY REBOUND OF HAMMER OR STAGGERING OF PILE. WHERE REQUIRED, CUT OFF HEADS OF PILES ACCURATELY IN ACCORDANCE WITH THE CONTRACT DOCUMENTS AFTER COMPLETION OF DRIVING.
2. THE FINAL DRIVING CRITERIA, INCLUDING FINAL BLOW COUNT, SHALL BE DETERMINED BY THE ENGINEER FOLLOWING COMPLETION OF DYNAMIC PILE TESTING USING THE PILE DRIVING ANALYZER (PDA) AND CAP WAP ANALYSIS REPORT.
3. DRIVE THE PILES STRAIGHT AND TRUE AT INDICATED LOCATIONS, WITH DEVIATION FROM THE LONGITUDINAL AXIS OF NOT MORE THAN 1/4 INCH PER FOOT OR AS REQUIRED TO MAINTAIN UNRESTRICTED VERTICAL TRAVEL OF FLOATS DURING WATER LEVEL FLUCTUATIONS.
4. LOCATE THE PILES WITHIN 3 INCHES OF THE POSITIONS INDICATED ON THE DRAWINGS.

C. PILE DRIVING CONTINUED

5. WITHDRAW PILES THAT ENCOUNTER UNDERGROUND OBSTRUCTIONS SUFFICIENT TO IMPEDE PILE DRIVING. RE-DRIVE AS CLOSE AS POSSIBLE TO ORIGINAL POSITION, SUBJECT TO REVIEW OF THE OWNER. REMOVE PILES WHICH BREAK OR DRIVE OUT OF LINE. DRIVE ANOTHER PILE IN ITS PLACE. PROVIDE AND MAINTAIN NECESSARY LIGHTING AND BARRIERS TO ADEQUATELY ASSURE PUBLIC SAFETY. PROVIDE ADEQUATE SAFEGUARDS TO PROTECT FROM DAMAGE IMPROVEMENTS ON THE WORK SITE AND ON ADJACENT PROPERTIES.
6. USE SUITABLE CUSHIONS OR DRIVING HEADS TO AVOID DAMAGE TO THE PILES, DEVELOPING PROPER TOTAL DRIVING ENERGY, AND DIRECTING THE ENERGY ALONG THE LONGITUDINAL CENTER OF GRAVITY OF THE PILE.
7. DRIVE PILES TO THEIR FULL PENETRATION WITHOUT BENDING, RUPTURING, OR MODERATELY DAMAGING THE PILES. IF FAILURE IN THE ABOVE RESPECTS IS ENCOUNTERED, PULL THE PILE AND DRIVE A NEW PILE AT NO ADDITIONAL COST TO THE OWNER. IF A REPLACEMENT PILE FAILS TO DEVELOP FULL DRIVING RESISTANCE, PULL THE REPLACEMENT PILE AND DRIVE A NEW PILE WITH LARGER DIAMETER AT NO ADDITIONAL COST TO THE OWNER.
8. JETTING TO ASSIST PENETRATION WILL NOT BE PERMITTED UNLESS ACCEPTED BY THE ENGINEER OF RECORD. WHEREBY ACCEPTED PRE-DRILLING TO ASSIST PENETRATION MAY BE USED WHERE EXTREME DRIVING RESISTANCE IS ENCOUNTERED, OR WHERE VIBRATIONS FROM DRIVING MAY BE DETRIMENTAL TO ADJACENT STRUCTURES.
9. WHERE PILES ARE PUSHED UP BY PRESSURE FROM DRIVING OF ADJACENT PILES, RE-DRIVE AS REQUIRED AND AT NO ADDITIONAL COST TO THE OWNER.
10. THE CONTRACTOR SHALL PROVIDE THE OWNER WITH A COMPLETE DRIVING RECORD WITH THE DATE OF FINAL INSTALLATION AND TIP ELEVATIONS FOR ALL TYPES OF PILES DRIVEN. THIS RECORD SHALL BE SUBMITTED WEEKLY AND SIGNED BY A REPRESENTATIVE OF THE CONTRACTOR. THE CONTRACTOR SHALL KEEP AN ACCURATE SET OF PILE RECORDS INDICATING PILE NUMBER, PILE TYPE AND INSTALLED LENGTH, TYPE OF HAMMER AND RATED ENERGY, DATE OF INSTALLATION, FINAL TIP ELEVATION, AND CONTRACTOR'S REPRESENTATIVE NAME AND SIGNATURE.

D. CONCRETE

1. STRUCTURAL CONCRETE SHALL COMPLY WITH THE "BUILDING CODE REQUIREMENTS FOR STRUCTURAL CONCRETE", ACI 318-14, PUBLISHED BY THE AMERICAN CONCRETE INSTITUTE (ACI).
2. CONCRETE STEEL REINFORCEMENT SHALL COMPLY WITH THE "DETAILS AND DETAILING OF CONCRETE REINFORCEMENT", ACI 315-99, PUBLISHED BY THE AMERICAN CONCRETE INSTITUTE (ACI).
3. STRUCTURAL CONCRETE SHALL COMPLY WITH THE "STANDARD SPECIFICATION FOR STRUCTURAL CONCRETE", ACI 301-10, PUBLISHED BY THE AMERICAN CONCRETE INSTITUTE (ACI).
4. CONCRETE STEEL REINFORCEMENT SHALL CONFORM TO ASTM A 615 GRADE 60 AND SHALL BE EPOXY COATED IN ACCORDANCE WITH ASTM A 775.
5. CONCRETE SHALL BE NORMAL WEIGHT WITH A MINIMUM COMPRESSIVE STRENGTH OF 5000 PSI AT 28 DAYS. PORTLAND CEMENT SHALL BE TYPE II. CONCRETE SHALL CONTAIN A MINIMUM OF 4% TO 6% (±1.5%) ENTRAINED AIR AND HAVE A MAXIMUM WATER TO CEMENT RATIO OF 0.40.
6. TO ENSURE THE DURABILITY OF CONCRETE IN MARINE ENVIRONMENT, CONCRETE SHALL BE PROPORTIONED TO HAVE A 'VERY LOW' PERMEABILITY AS EVIDENCED BY A CHLORIDE ION PENETRATION TEST RESULT (IN ACCORDANCE WITH ASTM C1202) OF 750 COLOUMBS (MAXIMUM) FOR CONCRETE SPECIMENS TESTED AT 28 DAYS.
7. ALL FINISHED SURFACES SHALL BE BROOM FINSHED, UNLESS NOTED OTHERWISE.

E. NON-SHRINK GROUT

1. NON-SHRINK GROUT SHALL BE FIVE STAR GROUT, HIGH PERFORMANCE PRECISION GROUT, CONFORMING TO ASTM C827 AND SHALL HAVE A 28-DAY COMPRESSIVE STRENGTH OF 8000 PSI, AS MANUFACTURED BY FIVE STAR PRODUCTS, INC., FAIRFIELD, CT.

F. STRUCTURAL STEEL

1. STRUCTURAL STEEL SHALL COMPLY WITH THE "STEEL CONSTRUCTION MANUAL", FOURTEENTH EDITION, PUBLISHED BY THE AMERICAN INSTITUTE OF STEEL CONSTRUCTION.
2. WELDING SHALL CONFORM TO THE 'STRUCTURAL WELDING CODE – STEEL', AS ADOPTED BY THE AMERICAN WELDING SOCIETY (AWS D1.1).
3. WELDING ELECTRODES SHALL BE E70XX AND COMPLY WITH AWS A5.1 AND AWS A5.5.
4. STRUCTURAL STEEL SHAPES SHALL CONFORM TO ASTM A 572, GRADE 50. STEEL TUBES SHALL CONFORM TO ASTM A500, GRADE B.
5. HIGH-STRENGTH BOLTS, NUTS AND WASHERS SHALL BE IN ACCORDANCE WITH "SPECIFICATION FOR STRUCTURAL JOINTS USING ASTM A 325BOLTS".
6. STEEL HARDWARE:
   a. PLATES ASTM A529, Fy=50 KSI
   b. ANCHOR BOLTS: ASTM F1554
   c. CARRIAGE BOLTS: ASTM A307
   d. HIGH STRENGTH STRUCTURAL BOLTS: ASTM A325, WITH HEX. HEADS
   e. NUTS: ASTM A563
   f. WASHERS: ASTM F436
   g. THREADED RODS: ASTM F1554, GRADE 105
   h. WASHERS AGAINST TIMBER SHALL BE COMMON OGEE DOCK WASHERS.
7. GALVANIZING SHALL CONFORM TO ASTM A 123 OR ASTM A 153, AS APPLICABLE. STEEL SHAPES AND PLATES SHALL BE EPOXY COATED. STEEL HARDWARE SHALL BE HOT-DIPPED GALVANIZED.
8. BOLTED CONNECTIONS SHALL USE 3/4" DIAMETER A 325 HIGH-STRENGTH BOLTS UNLESS OTHERWISE NOTED.
9. CONNECTIONS SHALL BE DESIGNED AND DETAILED BY THE STEEL FABRICATOR EXCEPT FOR THOSE SPECIFICALLY DETAILED IN THE CONTRACT DOCUMENTS.

G. TIMBER

1. VISUALLY GRADED STRUCTURAL LUMBER AND WOOD CONSTRUCTION SHALL CONFORM TO THE REQUIREMENTS OF THE "NATIONAL DESIGN SPECIFICATION FOR WOOD CONSTRUCTION" AND SUPPLEMENT, "DESIGN VALUES FOR WOOD CONSTRUCTION", NDS 2005, PUBLISHED BY THE NATIONAL FOREST AND PAPER ASSOCIATION.
2. TIMBER SHALL BE DOUGLAS FIR-LARCH (NORTH). TIMBER GRADE SHALL BE NO 1 OR BETTER.

G. TIMBER CONTINUED

3. TIMBER SHALL BE PRESERVATIVE PRESSURE TREATED IN ACCORDANCE WITH AWPA USE CATEGORY UC5A AND P5 FOR CHROMATED COPPER ARSENATE (CCA) TO A MINIMUM RETENTION OF 2.5 PCF.
4. CUT AND DRILLED EXPOSED TIMBER AND LUMBER SURFACES SHALL BE LIBERALLY RECOATED BY BRUSH WITH A FIELD TREATMENT ACCEPTED BY THE ENGINEER OF RECORD.

H. PROTECTIVE COATING

1. MATERIAL USED FOR FACTORY EPOXY COATING OF ALL SCHEDULED SURFACES SHALL BE BAR-RUST 235 MULTI-PURPOSE EPOXY COATING AS MANUFACTURED BY DEVOE COATINGS OR EQUIVALENT ACCEPTED BY THE ENGINEER OF RECORD.
2. FIELD TOUCH-UP COATING SHALL BE IDENTICAL TO FACTORY COATING AND APPLIED IN ACCORDANCE WITH THE MANUFACTURER'S REQUIREMENTS.
3. PROTECTIVE COATING TOP COAT SHALL BE BLACK UNLESS OTHERWISE INDICATED ON THE DRAWINGS OR BY THE OWNER.
4. SURFACES SHALL BE PREPARED IN STRICT ACCORDANCE WITH THE PROTECTIVE COATING SYSTEM MANUFACTURER'S WRITTEN INSTRUCTIONS.
5. THE PROTECTIVE COATING SHALL BE INSTALLED IN STRICT ACCORDANCE WITH MANUFACTURER'S WRITTEN INSTRUCTIONS. COATING IS TO BE APPLIED IN TWO COATS TO ACHIEVE A MINIMUM OVERALL DRY FILM THICKNESS OF 15 MILS.
6. ALL HOLIDAYS OR OTHER IMPERFECTIONS IN THE COATING SHALL BE REMOVED OR REPAIRED AT THE CONTRACTORS EXPENSE PRIOR TO FINAL ACCEPTANCE OF THE WORK.

I. FLOATS

1. ADDITIONAL CONCRETE FLOAT SYSTEMS SHALL BE DESIGN-BUILD AND SHALL CONFORM TO ALL REQUIREMENTS OF TECHNICAL SPECIFICATION SECTION 02910 'CONCRETE FLOATING DOCK SYSTEM'.
2. GUIDE PILES ARE NOT PART OF THE DESIGN-BUILD TECHNICAL SPECIFICATION. REFER TO DWG. S-701 FOR GUIDE PILE TYPE, SIZE AND LOCATIONS.
3. CLEATS SHALL BE COMPOSED OF ALMAG 35 CAST ALUMINUM ALLOY CONFORMING TO THE REQUIREMENTS OF THE FEDERAL SPECIFICATION QQ-A-571F AND QQ-A-601E.
4. FLOATATION MATERIAL SHALL BE CONTAINED IN A CLOSED CELL WITH SUFFICIENT MATERIAL PROPERTIES TO SUPPORT THE DEAD LOAD OF THE FLOAT PLUS A UNIFORM LIVE LOAD OF 40 PSF WITHOUT LIST.

J. TOLERANCE OF WALKING SURFACES

1. THE CONTRACTOR SHALL ENSURE A LEVEL TRANSITION BETWEEN ALL WALKING SURFACES.
2. THE MAXIMUM PERMISSIBLE ELEVATION CHANGE BETWEEN ADJACENT WALKING SURFACES SHALL BE 1/4 IN. WHICH SHALL INCLUDE THE SUM OF ALL FABRICATION AND INSTALLATION TOLERANCES OF ALL STRUCTURAL COMPONENTS THAT MAY INFLUENCE THE FINAL DECK SURFACE, INCLUDING BUT NOT LIMITED TO THE FOLLOWING: FLOAT, GRATING, TRANSITION PLATES, ETC.

May be difficult btw wave attenuator and auxilliary floats (restroom & FLUPSY). Consider curved toe plates that allow for grade breaks.

K. MOORING HARDWARE

1. FLOATING DOCK CLEATS SHALL BE CAST STEEL, HOT-DIPPED GALVANIZED, OPEN BASE HEAVY DUTY CLEATS (CLEAT RATING AS NOTED ON DRAWINGS) AS SUPPLIED BY PACIFIC MARINE AND INDUSTRIAL, OR APPROVED EQUAL. BOLT HEADS SHALL BE RECESSED INTO CLEATS; USE HOT-DIPPED GALVANIZED BOLTS.
2. TO PREVENT DAMAGE TO VESSEL MOORING LINES, NO SHARP EDGES AROUDN BOLTING AREA SHALL EXIST AFTER INSTALLATION

60% BREAKWATER DESIGN DRAWINGS

SOUNDWEST
ENGINEERING ASSOCIATES
8745 Pacific Avenue NW
Suite 201
Silverdale, WA 98383
360.337.0029
jpiccone@soundwesteng.com

CONSOR

HANCOCK POWER

PORT OF POULSBO

JOHN MARSHALL PICCONE
STATE OF WASHINGTON
50863
REGISTERED PROFESSIONAL ENGINEER

DRAWN BY	DJB
CHECKED BY	J. PICCONE

REVISIONS

PORT OF POULSBO
BREAKWATER REPLACEMENT

STRUCTURAL NOTES

DATE
MAY 20, 2020

SHEET
S2

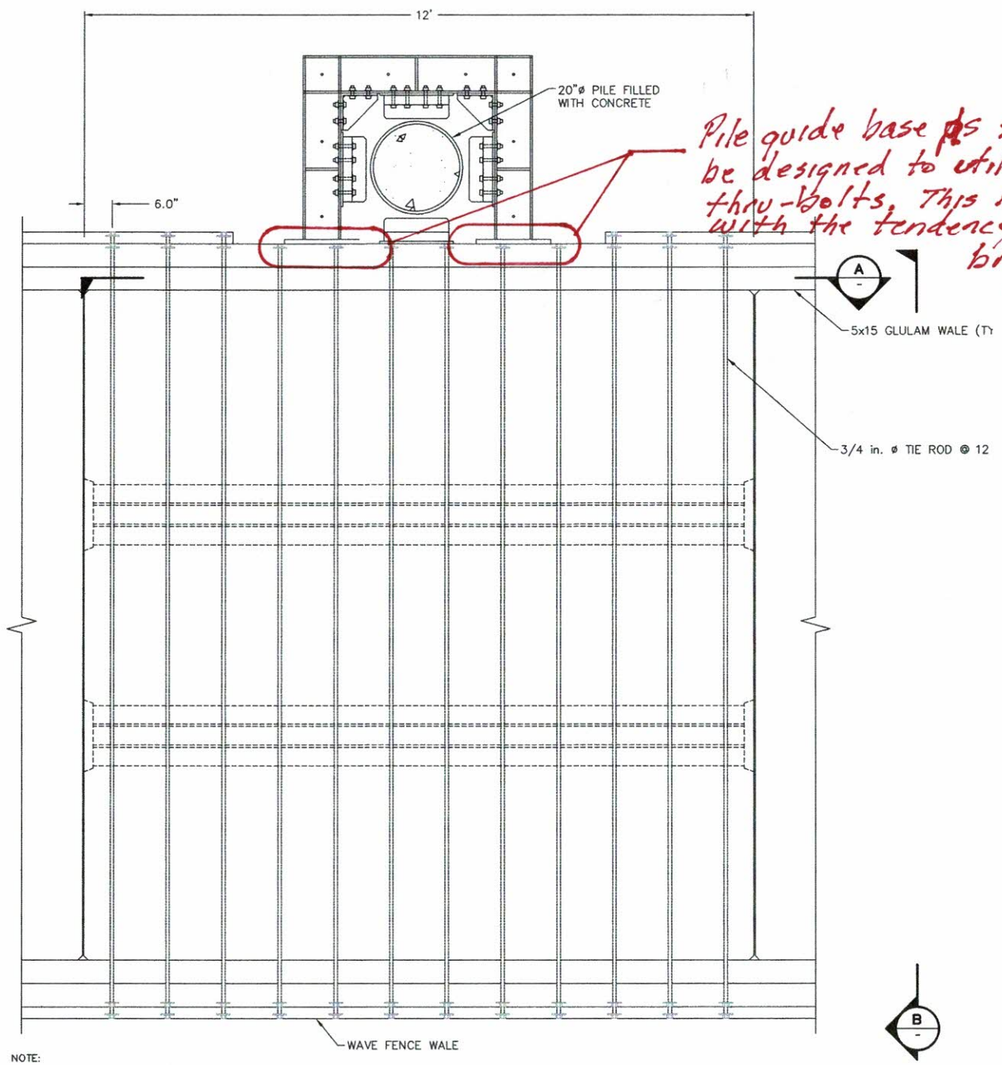

Pile guide base plates should be designed to utilize attenuator thru-bolts. This is a heavy connection with the tendency to sag. Consider bracing as well.

NOTE:

1. BATTER PILE NOT SHOWN FOR CLARITY.

TYPICAL FLOAT PLAN (1)

0 3/4" 1-1/2" SCALE

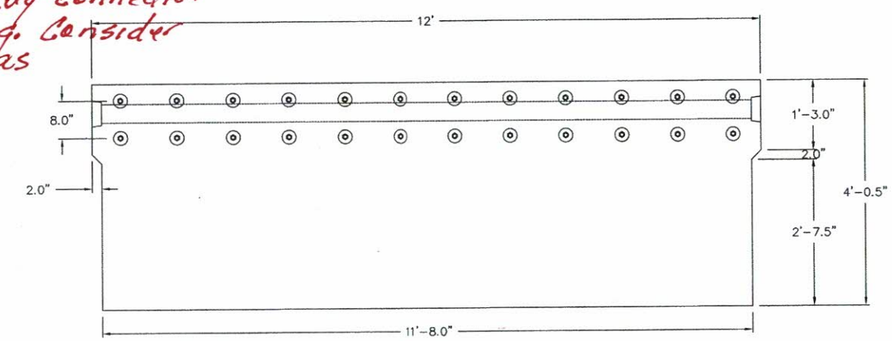

SECTION (A)

0 3/4" 1-1/2" SCALE

Wave fence details will cause timber fatigue over time.

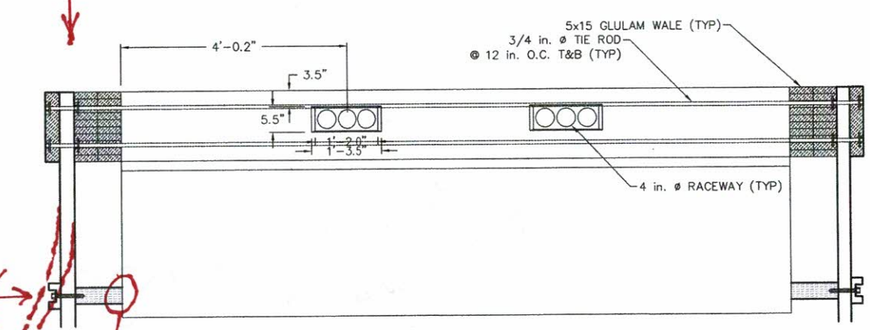

Lag bolts will not survive long.

Note: No physical connection, just bearing. Thru bolts to opposite side of float would have been preferable.

SECTION (B)

0 3/4" 1-1/2" SCALE

60% BREAKWATER DESIGN DRAWINGS

SOUNDWEST
ENGINEERING ASSOCIATES
8745 Pacific Avenue NW
Suite 201
Silverdale, WA 98383
360.337.0029
jpiccone@soundwesteng.com

CONSOR

HARBOR POWER

PORT OF POULSBO

JOHN MARSHALL PICCONE
STATE OF WASHINGTON
50863
REGISTERED PROFESSIONAL ENGINEER

DRAWN BY	DJB
CHECKED BY	J. PICCONE

REVISIONS

PORT OF POULSBO
BREAKWATER REPLACEMENT

DETAILS 1 OF 5

DATE
MAY 20, 2020

SHEET
S3

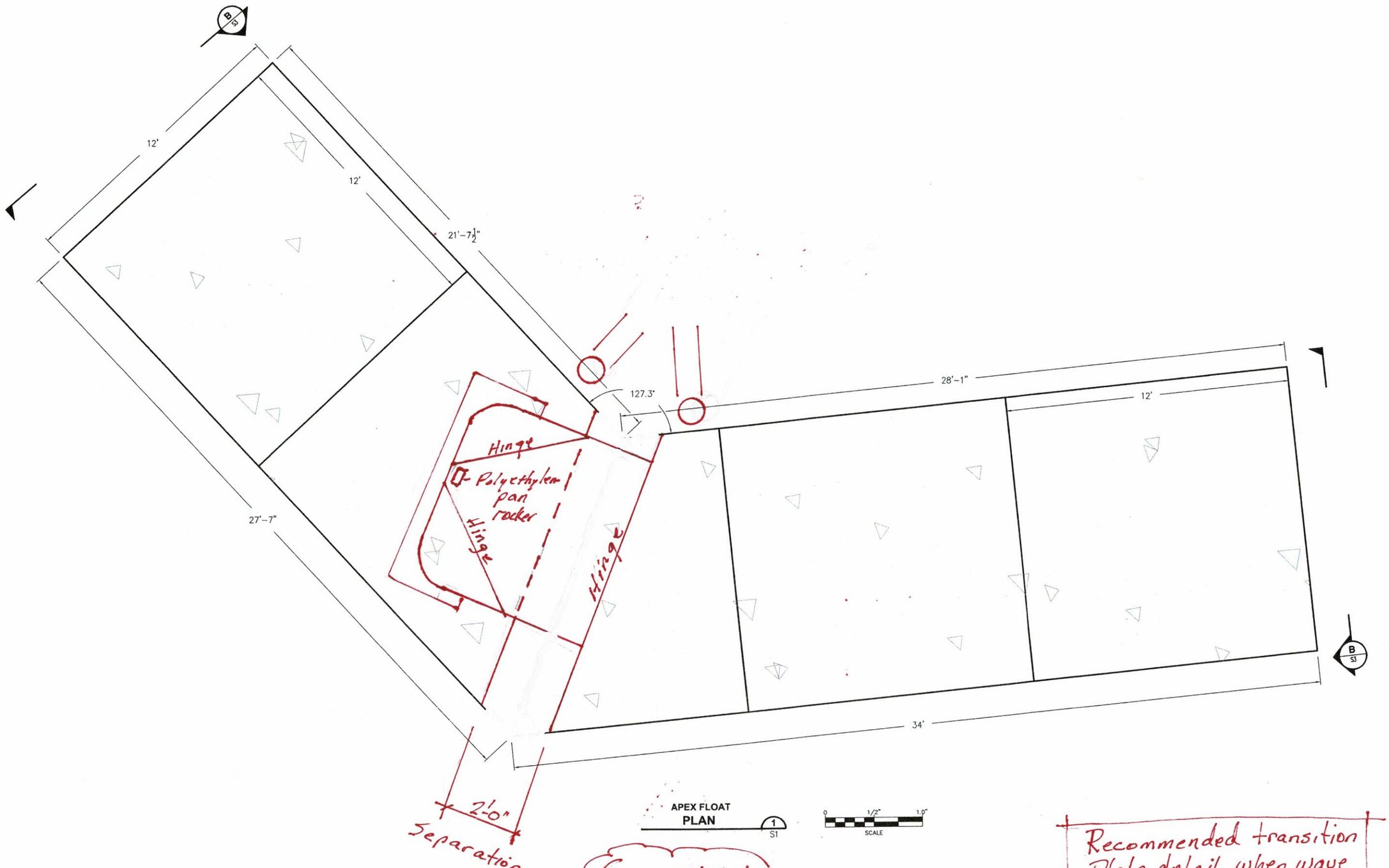

APEX FLOAT
PLAN
1
S1

0 1/2" 1.0"
SCALE

Recommended transition Plate detail when wave attenuator changes alignment.

60% BREAKWATER DESIGN DRAWINGS

SOUNDWEST
ENGINEERING ASSOCIATES
8745 Pacific Avenue NW
Suite 201
Silverdale, WA 98383
360.337.0029
jpiccone@soundwesteng.com

CONSOR

HARBOR POWER

PORT OF POULSBO

JOHN MARSHALL PICCONE
STATE OF WASHINGTON
50663
REGISTERED PROFESSIONAL ENGINEER

DRAWN BY	DJB
CHECKED BY	J. PICCONE

REVISIONS

PORT OF POULSBO
BREAKWATER REPLACEMENT

DETAILS 2 OF 5

DATE
MAY 20, 2020

SHEET
S4

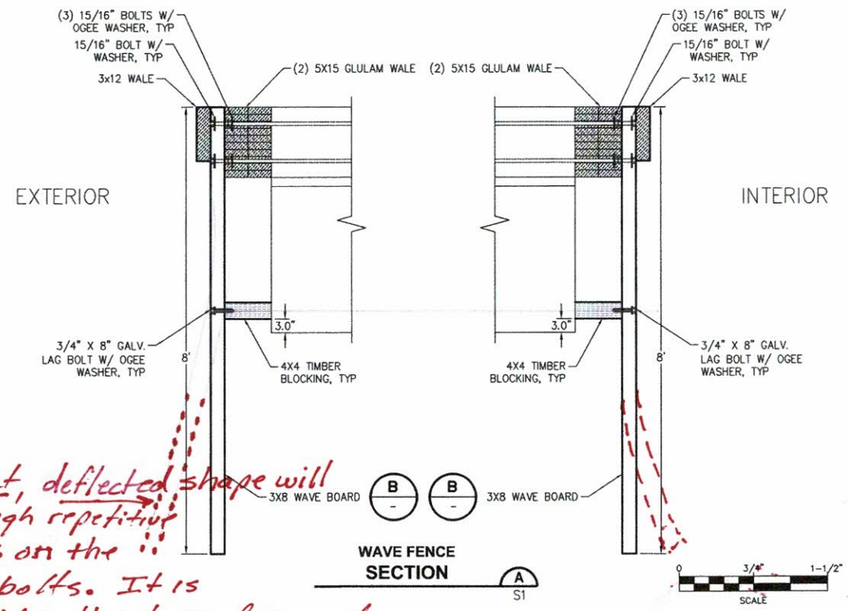

Correct, deflected shape will put high repetitive Stress on the Lag bolts. It is doubtful this type of connection will survive long in these wave conditions.

WAVE FENCE SECTION A S1

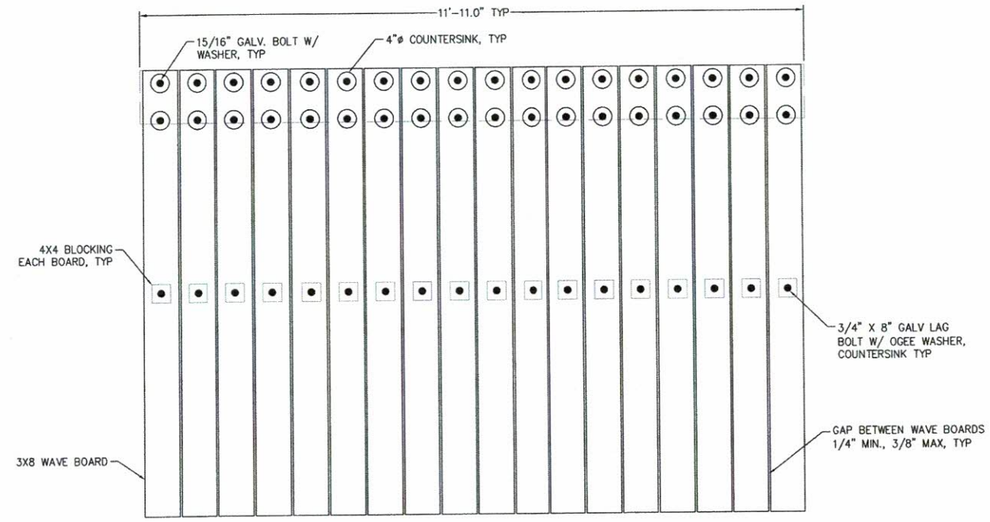

WAVE FENCE ELEVATION B

0 3/4" 1-1/2" SCALE

SOUNDWEST
ENGINEERING ASSOCIATES
8745 Pacific Avenue NW
Suite 201
Silverdale, WA 98383
360.337.0029
jpiccone@soundwesteng.com

CONSOR

HARBOR POWER

PORT OF POULSBO

JOHN MARSHALL PICCONE
STATE OF WASHINGTON
50063
REGISTERED
PROFESSIONAL ENGINEER

DRAWN BY	DJB
CHECKED BY	J. PICCONE

REVISIONS

PORT OF POULSBO BREAKWATER REPLACEMENT

DETAILS 3 OF 5

DATE
MAY 20, 2020

SHEET
S5

60% BREAKWATER DESIGN DRAWINGS

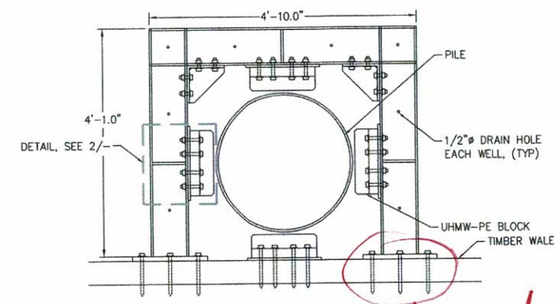

good - Are these the thru bolts supporting to wave fence?

ANCHOR PILE COLLAR
PLAN A (1 / S1)

0 3/4" 1-1/2"
SCALE

Vertical bracing to support the weight of the guide fabrication should be considered.

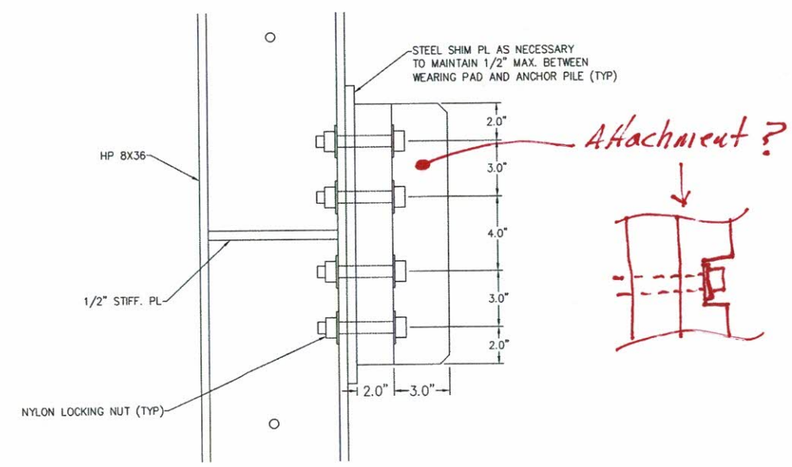

UHMW-PE-BLOCK
DETAIL (2 / -)

0 3" 6"
SCALE

60% BREAKWATER DESIGN DRAWINGS

SOUNDWEST
ENGINEERING ASSOCIATES
8745 Pacific Avenue NW
Suite 201
Silverdale, WA 98383
360.337.0029
jpiccone@soundwesteng.com

CONSOR

HARBOR POWER

PORT OF POULSBO

JOHN MARSHALL PICCONE
STATE OF WASHINGTON
50883
REGISTERED PROFESSIONAL ENGINEER

DRAWN BY	DJB
CHECKED BY	J. PICCONE

REVISIONS

PORT OF POULSBO BREAKWATER REPLACEMENT

DETAILS 4 OF 5

DATE
MAY 20, 2020

SHEET
S6

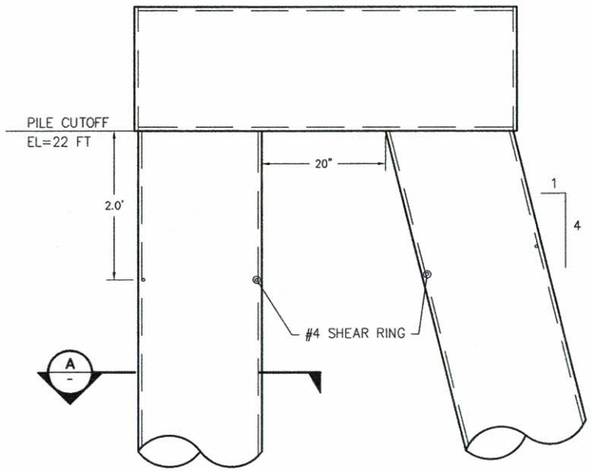

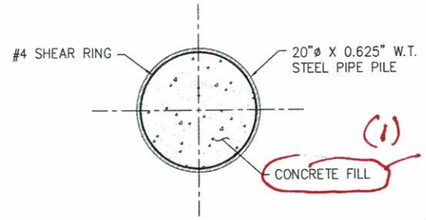

(1) I question the benefit of filling these piles with concrete. Steel pile is totally sealed once cap is welded and will not corrode-inside-out

PILE SECTION A – SCALE 0 1 2

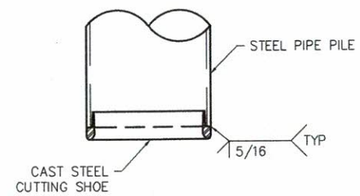

TYPICAL CUTTING SHOE DETAIL 1 G4 SCALE 0 1 2

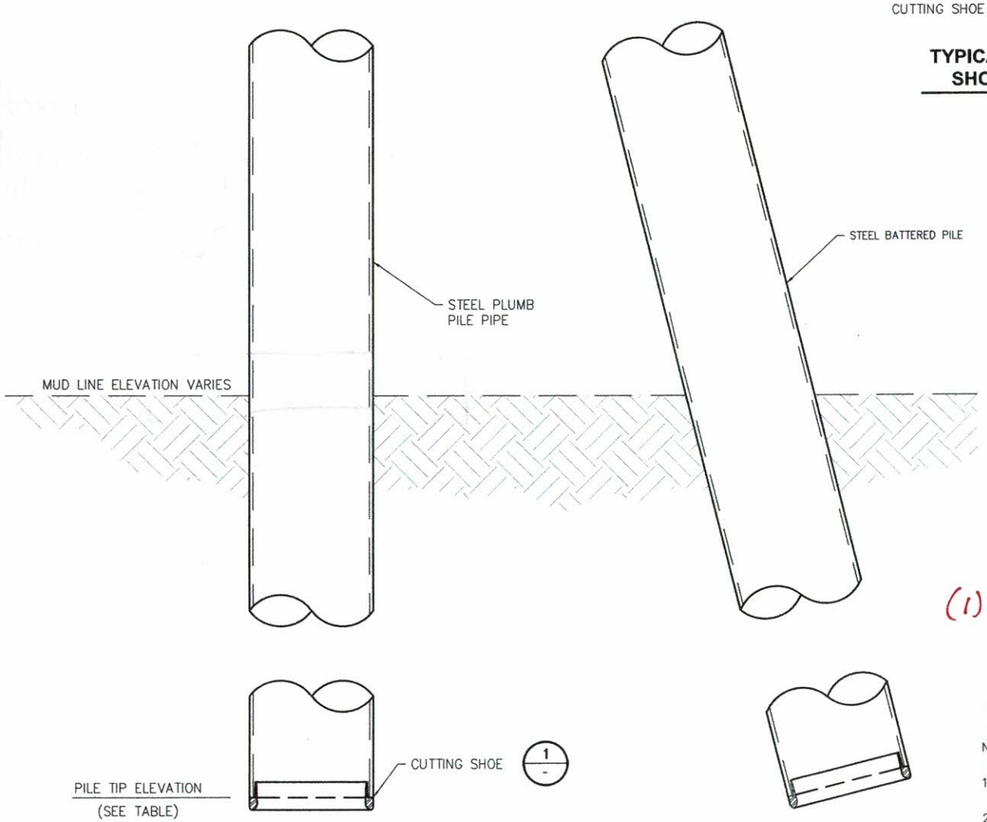

PILE DETAIL 1 G4 SCALE 0 1 2

Is there any intent to cushion these piles to prevent boat damage? Floating fender tubes are available.

(1) There have been studies to determine the effectiveness of filling pipe piles with concrete to mitigate corrosion. Studies have concluded it doesn't help much. But if it is needed for pile strength, it does increase the stiffness of the pile and has benefit.

NOTES:
1. REMOVE SEDIMENT FROM INTERIOR OF PILE, FULL LENGTH.
2. CAPTURE AND REMOVE FROM SITE ALL MATERIAL FROM PILE INTERIOR.
3. FILL INTERIOR OF PILE WITH XX PSI CONCRETE, FULL LENGTH (SEE SEPCIFICATIONS FOR MIX DESIGN).

PIPE SCHEDULE TABLE

PILE NO.	PILE TYPE	PILE SIZE (IN)	WALL THICKNESS (IN)	EST. PILE CUT-OFF ELEV (FT)	EST. PILE TIP ELEV. (FT)	EST. INSTALLED LENGTH (FT)
W1B	BATTERED	20	0.625	23	-62.3	88
W1P	PLUMB	20	0.625	23	-69.0	92
W2B	BATTERED	20	0.625	23	-62.3	88
W2P	PLUMB	20	0.625	23	-69.0	92
W3B	BATTERED	20	0.625	23	-62.3	88
W3P	PLUMB	20	0.625	23	-69.0	92
W4B	BATTERED	20	0.625	23	-62.3	88
W4P	PLUMB	20	0.625	23	-69.0	92
W5B	BATTERED	20	0.625	23	-62.3	88
W5P	PLUMB	20	0.625	23	-69.0	92
W6B	BATTERED	20	0.625	23	-62.3	88
W6P	PLUMB	20	0.625	23	-69.0	92
W7B	BATTERED	20	0.625	23	-55.6	81
W7P	PLUMB	20	0.625	23	-60.0	83
W8B	BATTERED	20	0.625	23	-55.6	81
W8P	PLUMB	20	0.625	23	-60.0	83
W9B	BATTERED	20	0.625	23	-55.6	81
W9P	PLUMB	20	0.625	23	-60.0	83
W10B	BATTERED	20	0.625	23	-55.6	81
W10P	PLUMB	20	0.625	23	-60.0	83
W11B	BATTERED	20	0.625	23	-55.6	81
W11P	PLUMB	20	0.625	23	-60.0	83
W12B	BATTERED	20	0.625	23	-55.6	81
W12P	PLUMB	20	0.625	23	-60.0	83
S1B	BATTERED	20	0.625	23	-61.4	87
S1P	PLUMB	20	0.625	23	-69.0	92
S2B	BATTERED	20	0.625	23	-61.4	87
S2P	PLUMB	20	0.625	23	-69.0	92
S3B	BATTERED	20	0.625	23	-61.4	87
S3P	PLUMB	20	0.625	23	-69.0	92
S4B	BATTERED	20	0.625	23	-61.4	87
S4P	PLUMB	20	0.625	23	-69.0	92
S5B	BATTERED	20	0.625	23	-61.4	87
S5P	BATTERED	20	0.625	23	-69.0	92
S6B	BATTERED	20	0.625	23	-61.4	87
S6P	PLUMB	20	0.625	23	-69.0	92
S7B	BATTERED	20	0.625	23	-60.4	86
S7P	PLUMB	20	0.625	23	-67.0	90
S8B	BATTERED	20	0.625	23	-67.0	90
S8P	PLUMB	20	0.625	23	-67.0	90
S9B	BATTERED	20	0.625	23	-67.0	90
S9P	PLUMB	20	0.625	23	-67.0	90
S10B	BATTERED	20	0.625	23	-67.0	90
S10P	PLUMB	20	0.625	23	-67.0	90
S11B	BATTERED	20	0.625	23	-67.0	90
S11P	PLUMB	20	0.625	23	-67.0	90
S12B	BATTERED	20	0.625	23	-67.0	90
S12P	PLUMB	20	0.625	23	-67.0	90

SOUNDWEST
ENGINEERING ASSOCIATES
8745 Pacific Avenue NW
Suite 201
Silverdale, WA 98383
360.337.0029
jpiccone@soundwesteng.com

CONSOR

HARBOR POWER

PORT OF POULSBO

JOHN MARSHALL PICCONE
STATE OF WASHINGTON
60883
REGISTERED
PROFESSIONAL ENGINEER

DRAWN BY	DJB
CHECKED BY	J. PICCONE

REVISIONS

PORT OF POULSBO
BREAKWATER REPLACEMENT

DETAILS 5 OF 5

DATE
MAY 20, 2020

SHEET
S7

60% BREAKWATER DESIGN DRAWINGS

Attachment B
SK-1: Transition Plate Concept

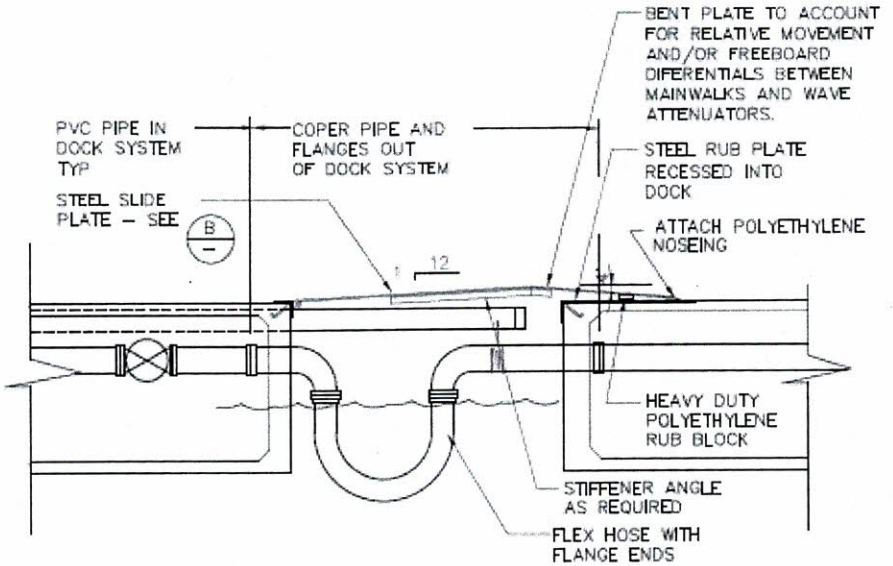

SECTION

A
M-C6.2

SCALE: 1/2"=1'-0"

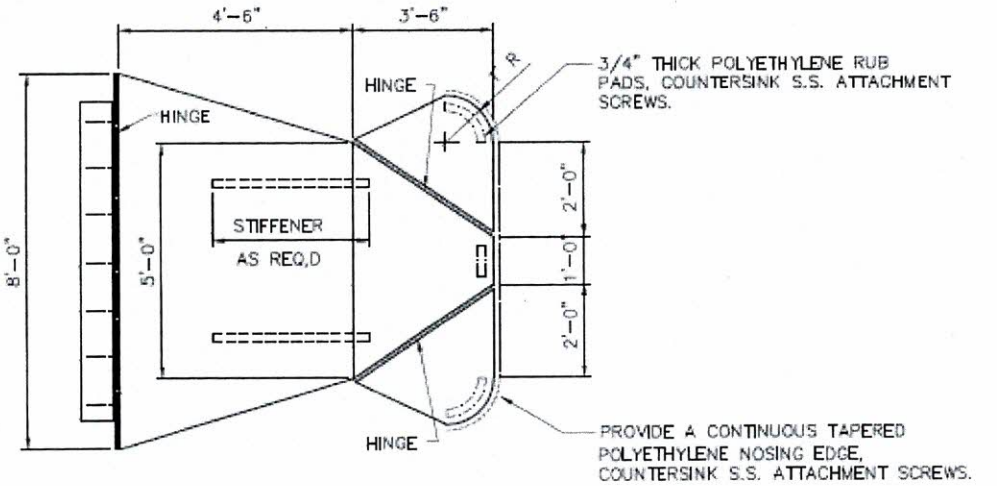

PLAN OF STEEL SLIDE PLATE

B
M-C6.2

SCALE: 1/2"=1'-0"

Transition Plate

SK-1